Vogelgrün – Fixed speed model with SPPS and HBH*

Block Diagram for FCR provision

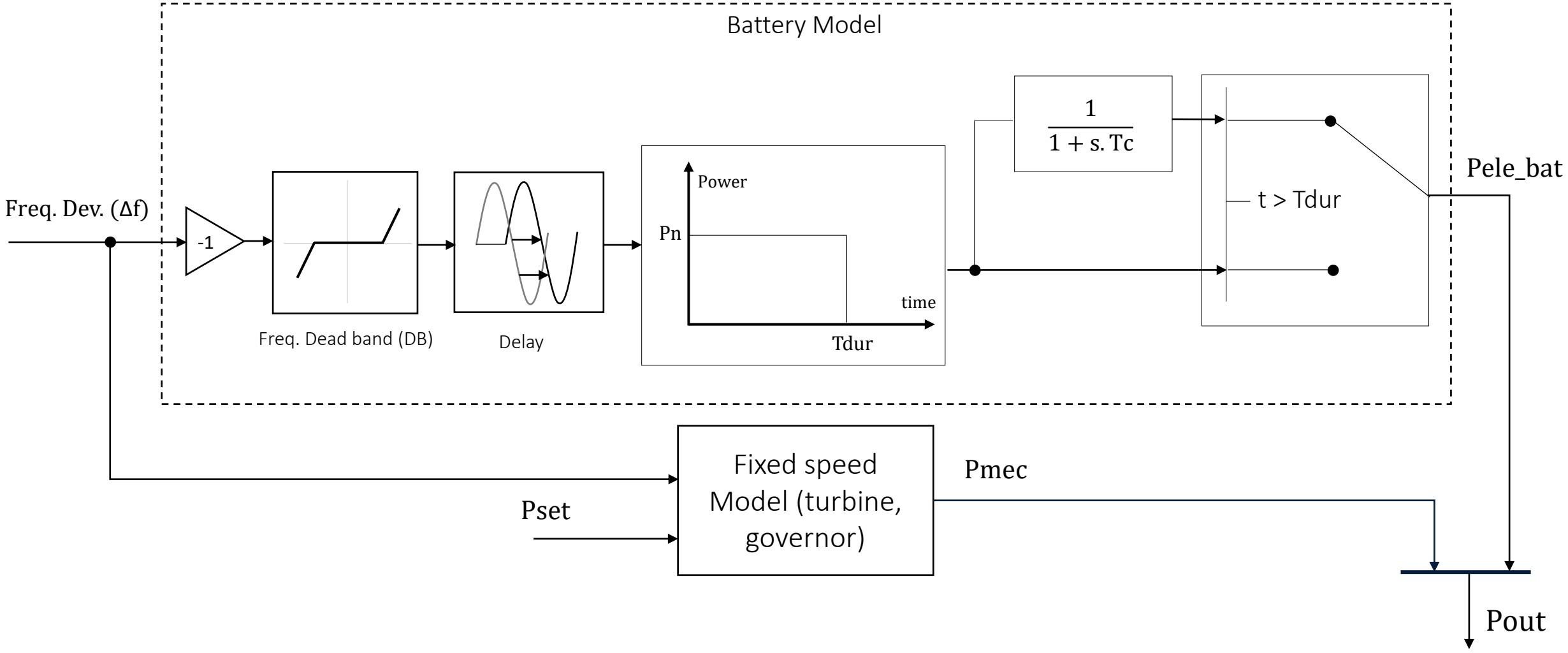

*HBH – Hydro-battery-hybrid

Run-of-river hydropower plant (no pump mode available)

Vogelgrün – Fixed speed governor model with SPPS

Block Diagram for FCR provison (based on HYGOV model)

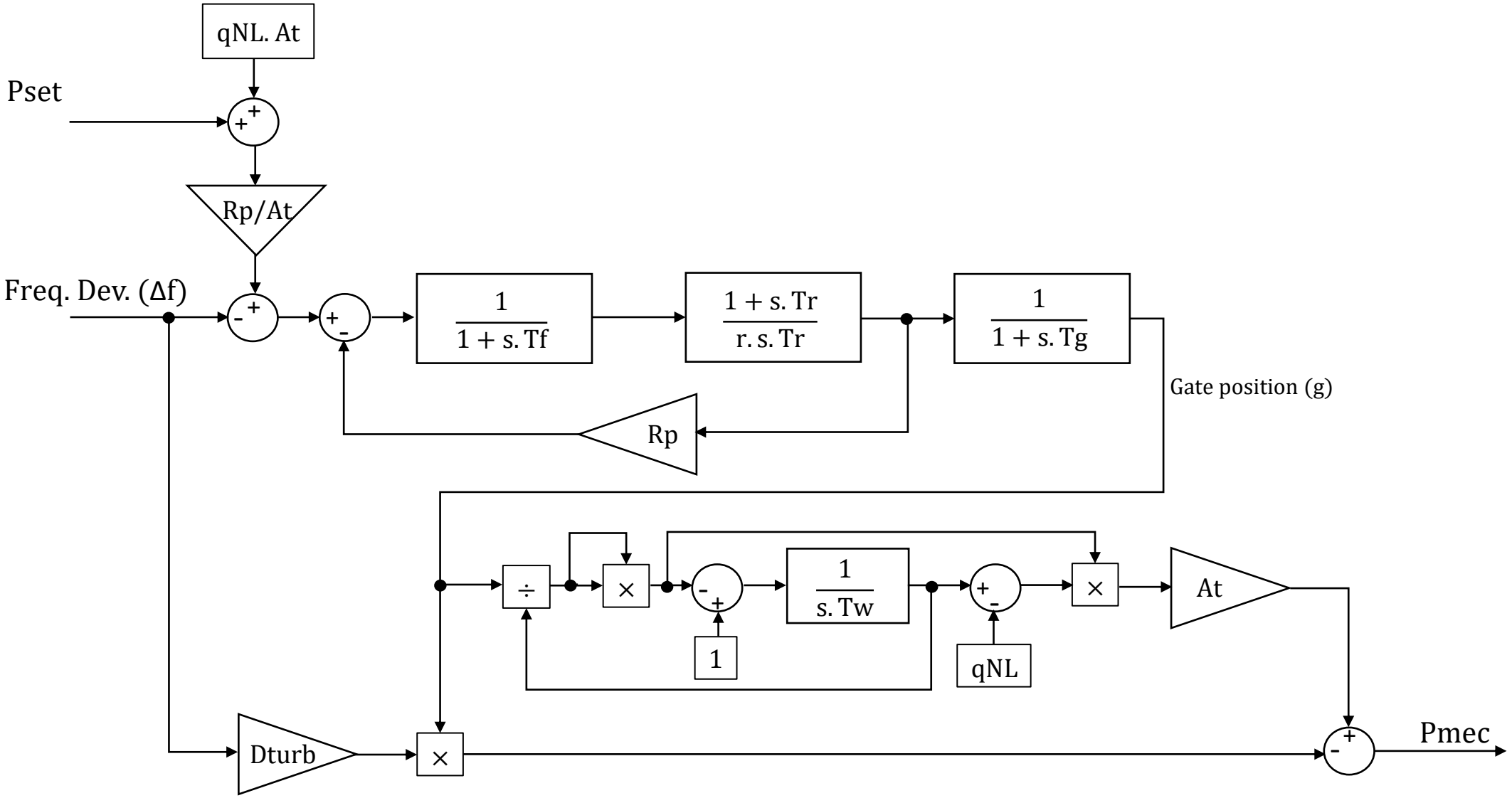

Vogelgrün – Fixed speed model with SPPS and HBH

Model's input signals, output signals and parameters

Input signals:

- Δf – grid frequency deviation from setpoint, given by fgrid - fset (p.u.)
- Pset – active power setpoint (p.u.)

Output signals:

- Pmec – mechanical power (p.u.)
- Pele_bat – battery electrical active power output (p.u.)
- Pout – active power output of the Hydro-battery-hybrid model (p.u.)

Battery parameters:

- Pn – battery rated power (p.u.)
- DB – frequency deadband (p.u.)
- Tc – decay time constant (s)
- Tdur – support duration time (s)

Fixed speed governor parameters:

- Rp – permanent droop (p.u.)
- r – transient speed droop (p.u.)
- Tr – governor time constant (s)
- Tf – filter time constant (s)
- Tg – gate servomotor time constant (s)
- VELM – gate velocity limit (p.u./s)
- Tw – water starting time constant (s)
- At – turbine gain (p.u.)
- Dturb – turbine dumping (p.u.)
- qNL – no load water rate (p.u.)
- Gmax – maximum gate opening (p.u.)
- Gmin – minimum gate opening (p.u.)

Vogelgrün – Fixed speed model with SPPS and HBH
FCR input signals

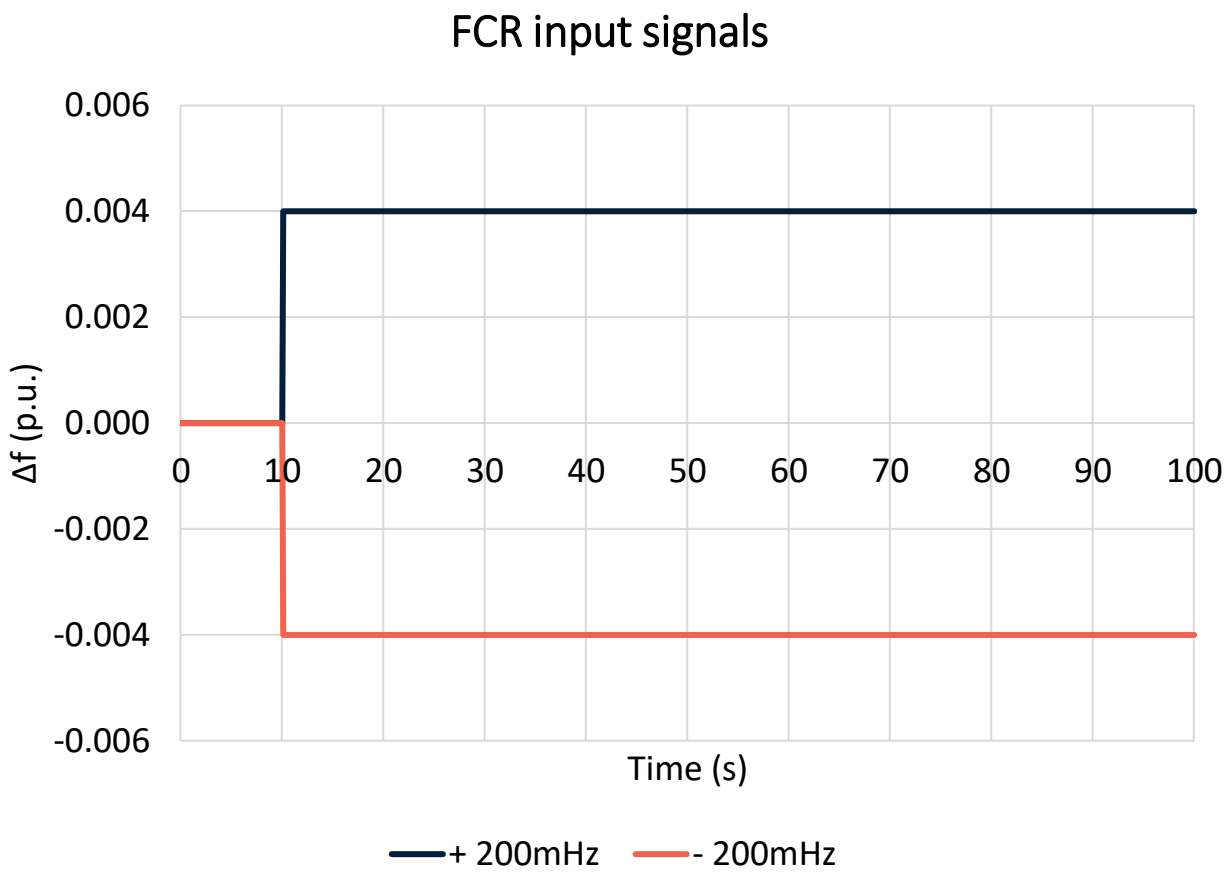

Vogelgrün – Fixed speed model with SPPS and HBH

FCR service provision