Model: 3000 XL

INSTALLATION

OPERATION

MAINTENANCE MANUAL

Manufactured by:

CLEAN AIR CONCEPTS
11449 Deerfield Road
Cincinnati, OH 45242
Phone: 800-875-5440
Fax: 513-247-2502
www.airhawksystems.com

2012 rev

GENERAL AIR CHANGE GUIDELINES

LIMITED LIFETIME WARRANTY

All Components, and Motor Blower Assembly less UV Lamps and Filters See manufacturer's Terms and Conditions to qualify. See Page 20 for more details

Total shipping weight of Model 3000 XL:

281 lbs w/PCO - 269 lbs w/o PCO

Hanging Weight

261 lbs w/PCO - 249 lbs w/o PCO

Thank you for purchasing this quality air purification unit!

Clean Air Concepts
800-875-5440

IMPORTANT SAFETY INSTRUCTIONS

Before installing the *AirHAWK* Air Purification System, inspect for any signs of dam- age. During handling and installation ***take care to protect the catalytic honeycomb*** of the product from physical damage, as the aluminum titanium core is very soft and can be easily damaged.

Warning:

Always disconnect the electrical power to the *AirHAWK* when changing the ***filter*** or ***ultraviolet lamps***. **Never look into a burning ultraviolet lamp without proper eye protection as severe damage to the eyes can result.**

This product is rated for standard ambient air temperature not to exceed 125° F.

Do not attempt to ***clean the catalytic honeycomb core*** with cleaning solutions. The catalyst is radiated with short wave ultraviolet light during periods of non-air flow and is self cleaning for biological contaminant. If, however, the core becomes contaminated with dirt, soot or other debris, **"Windex"** cleaner may be sprayed and washed off with clear water and then completely dried. The catalyst is not intended to be used as a filter, so **do not** operate without proper filtration. **Do not** allow water to contact the UV lamps or any wiring.

Access for service when installing unit allow ample door clearance for servicing. Do not obstruct door opening with electrical conduit, piping, metal ceiling joist or wall.

SPECIFICATIONS

PHOTO CATALYTIC OXIDATION CHAMBER

Model:	**3000 XL**	
	Voltage:	230 Volts
	PCO Voltage	120 Volts
	Fuse:	Replace only with AGC-1 Fuse
	Max Face Velocity:	625 FPM
	U.V. Range:	254 NM (Germicidal)
	Catalyst:	Metal Oxide

MOTOR BLOWER

The 3000XL is supplied with a Direct Drive Blower Assembly with permanent split capacitor motor and a forward curved fan wheel.

Motor Specifications

230 Volts, 9 Amps, @1075 RPM 3000 CFM @ 1.2 S.P.

The motor blower is manufactured with three speeds. It is connected with the black wire which is high speed **only**. If necessary it can be changed as follows:

Blue—medium speed
Red—low speed

Total System

Voltage: 230/1/60

Optional 208/230v Available

Amperes : Approx 10 Amps

HOW THE *AirHAWK* OPERATES

The motor blower assembly draws air through the media prefilter and primary filter to remove the larger particles from the contaminated air. Then, the PCO (photo catalytic oxidation) chamber, which contains two ultraviolet lamps and a specially coated titanium-dioxide grid, neutralizes carbon monoxide, sulphur dioxide, and other gases through the photo catalytic process. Lastly, as the air reaches the charcoal filter it is further stripped of even smaller gas phase particles. The cleaned air is then drawn through the motor/blower to be directed towards the occupied area and pushes the cleaned air to the point where new contaminated air mixes with it and then is drawn again into the unit to start the process over. The more times you can recirculate the air, the more pure it becomes.

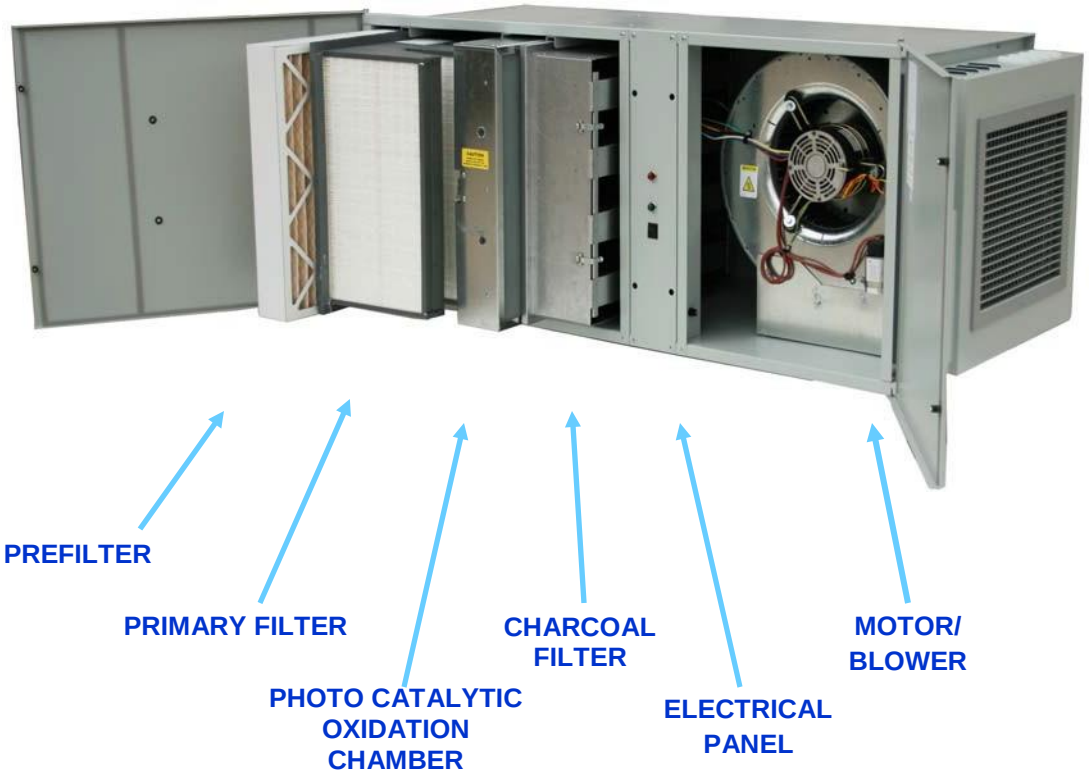

INSTALLATION

NOTE: THIS PRODUCT HAS BEEN DESIGNED SPECIFICALLY FOR COMMERCIAL APPLICATIONS.

The *AirHAWK* Air Purification System can be installed by suspending it from the ceiling joists/structure.

Threaded rod, eyebolts and chain may be used for hanging the unit. The installation must be level.

It is recommended that a nut on the inside and outside of the cabinet be used to lock the fastener in place.

Units should be hung so that the outlets are approximately **9** to **18** feet above the floor. At this level they are much more effective in cleaning the air close to the breath- ing zone. In addition, service is easier to perform at this level.

Existing airflow sources can be used to supplement the pattern to be established. Space heaters, air conditioning outlets, and makeup air system outlets can also pro- vide strong air patterns which must be considered in the unducted layout.

The *AirHAWK* Air Purification System is designed to draw the contaminated air through the unit and exhaust clean air back into the room. The clean air is used to push contaminated air through the room and back to the inlet of the unit. Directions of air patterns and proper placement of your unit should be established by your local *AirHAWK* distributor or by Clean Air Concepts.

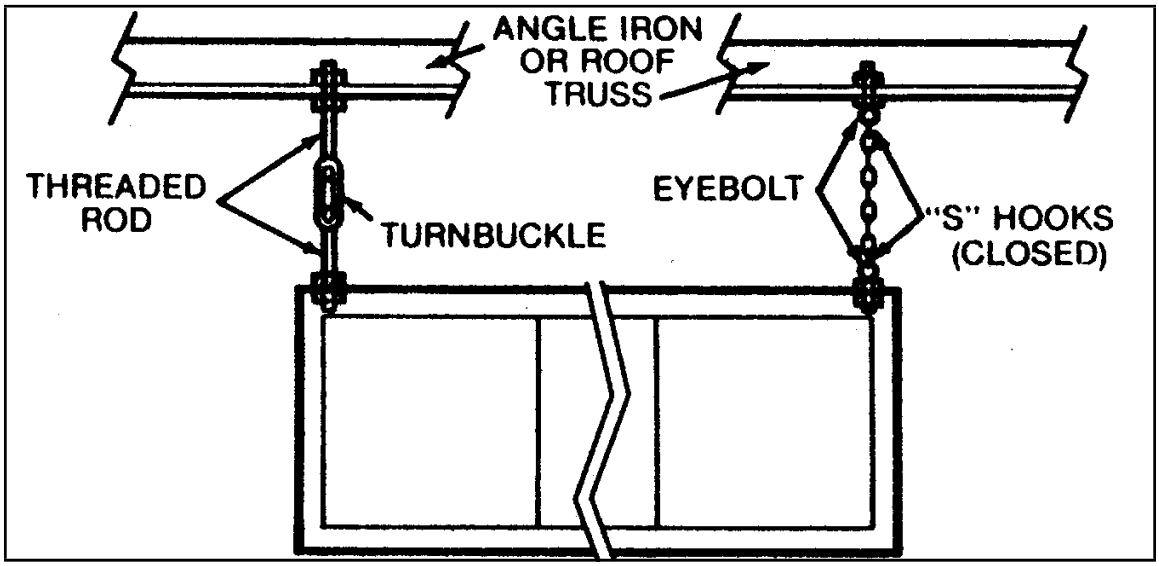

SERVICE

When accessing unit to clean, change filters or do maintenance, insure power is disconnected to the unit. The PCO side of the cabinet has a micro switch to insure power disconnection to the UV lights upon opening door. Latches (South-Co) turned counter-clockwise 1/4 turn to unlock and reverse to lock allows access to open and close (lock both doors of cabinet). To change filters simply pull straight out and replace with new filter. Take care not to tear material since this will allow air leakage.

The *AirHAWK* has a prefilter, primary filter, activated carbon filter and a (optional) photo-catalytic chamber.

Prefilter should be changed every 3—6 months or 300 hrs depending on the application—(heavy dirt load perhaps sooner).

Primary filter should be changed every 24 –36 months or 900 hrs depending on application—It is protected by the prefilter.

Activated carbon/potassium permanganate (Charcoal Filter) should be changed every 24—36 months or 900 hrs of run time.

Photo-catalytic chamber contains ultraviolet lamps and honeycomb grid. Bulbs should be changed every 7000 hours or annually. Proper filter change-out and a good seal will insure a clean honeycombed Titanium-dioxide grid. If it becomes coated with debris for some reason, remove and wash off with mild soap or Windex®, flush with clean water and allow to dry.

CHANGING THE UV LAMPS

1. Remove both the prefilter and primary filter.
2. Reach inside and rotate UV lamp 1/4 turn in either direction and remove.—Fig—3
3. Carefully place new lamp back into inner case so that the pins line up with the slot on lamp holders at each end. Fig—4
4. Slide the new lamp down into the lamp holders and rotate 1/4 turn.
5. Replace filters in proper sequence with air flow in proper direction.
6. Close door and check sight ports for lamp illumination.

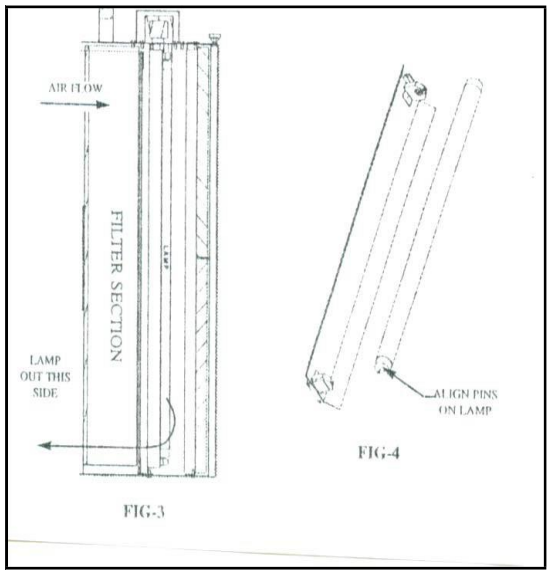

WIRING DIAGRAM

AirHAWK 3000 XL
With 230 Volt
1 HP Blower

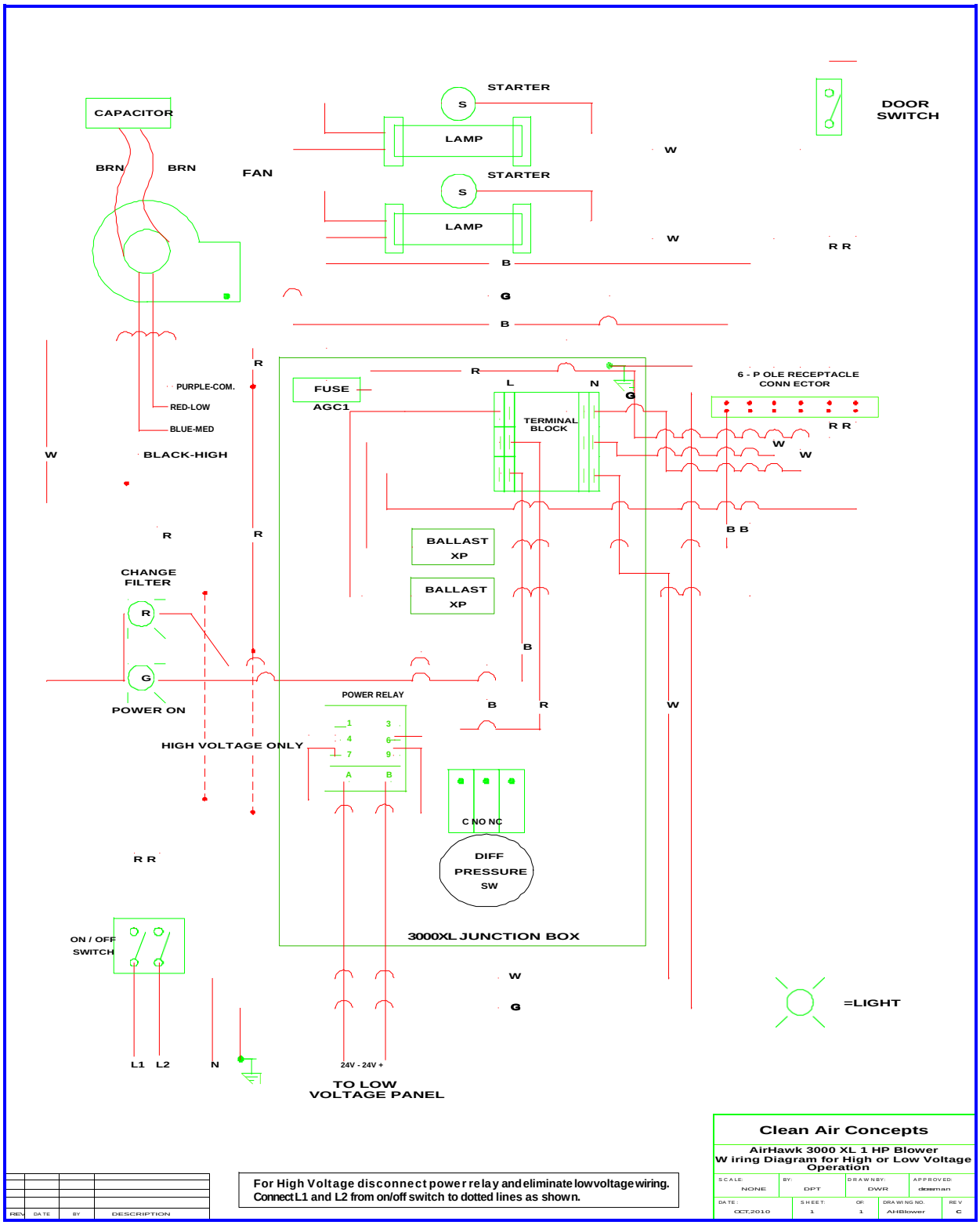

REV	DATE	BY	DESCRIPTION

For High Voltage disconnect power relay and eliminate low voltage wiring.
Connect L1 and L2 from on/off switch to dotted lines as shown.

Clean Air Concepts

AirHawk 3000 XL 1 HP Blower
Wiring Diagram for High or Low Voltage Operation

SCALE:	BY:	DRAWN BY:	APPROVED:
NONE	DPT	DWR	dosman

DATE:	SHEET:	OF:	DRAWING NO.	REV
OCT,2010	1	1	AHBlower	C

PARTS - ELECTRICAL PANEL

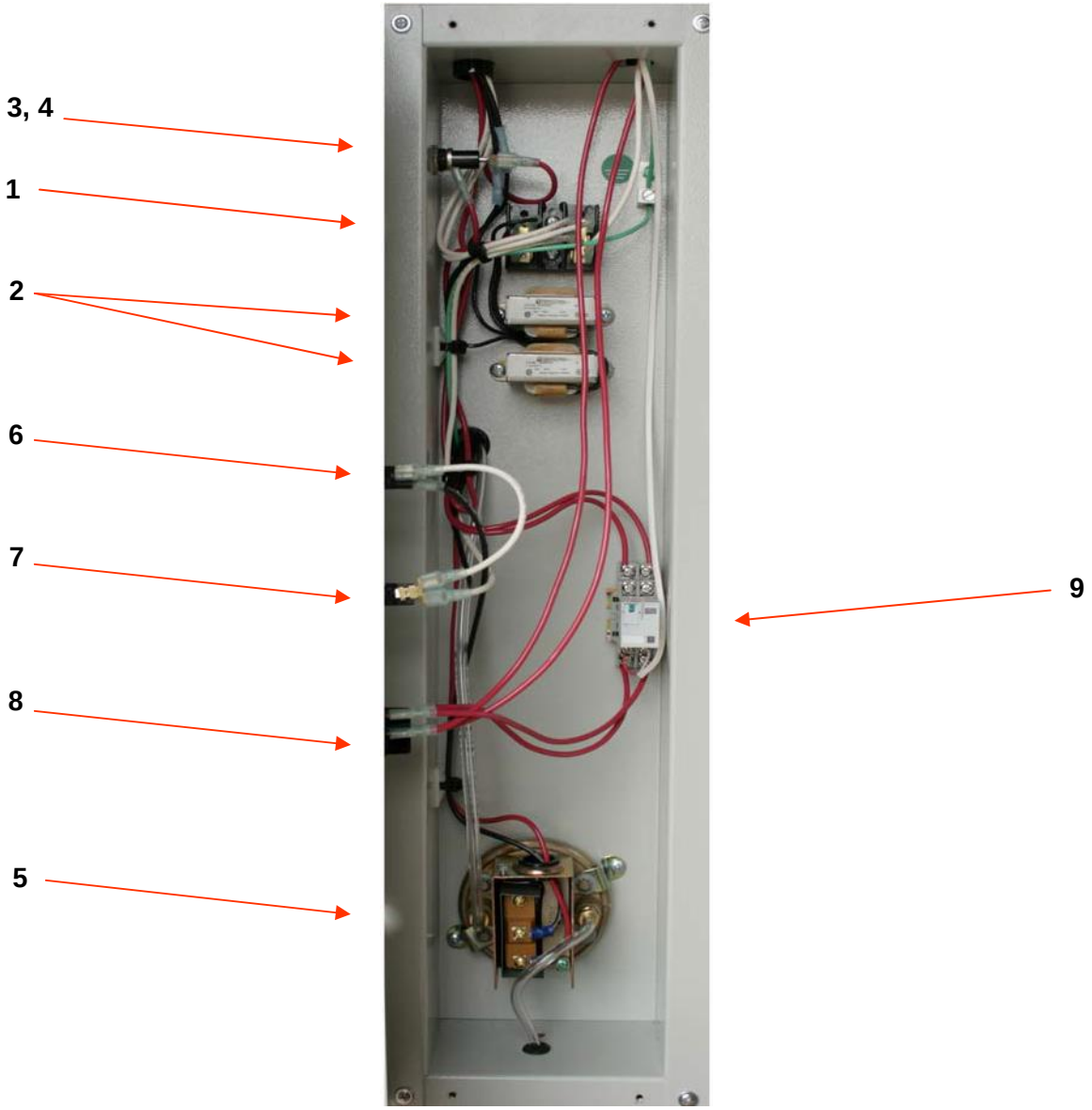

ITEM	PART	DESCRIPTION	RATING
1	600003-02	Terminal Block	120 Volts
2	600003-10	.420 Ballast Transformers	
3	600003-01	Fuse Holder	
4	600003-41*	Fuse	AGC-1A
5	600002-04	Differential Pressure Switch	120 Volts, 15 Amps
6	600003-07*	Indicator Lamp-Red	120 FSB
7	600003-08*	Indicator Lamp-Green	120 FSB
8	600003-71*	Switch, Rocker (DPST)	250 Volts, 10 Amps
9	600620-03	Low Voltage Relay	24-VDC

PARTS

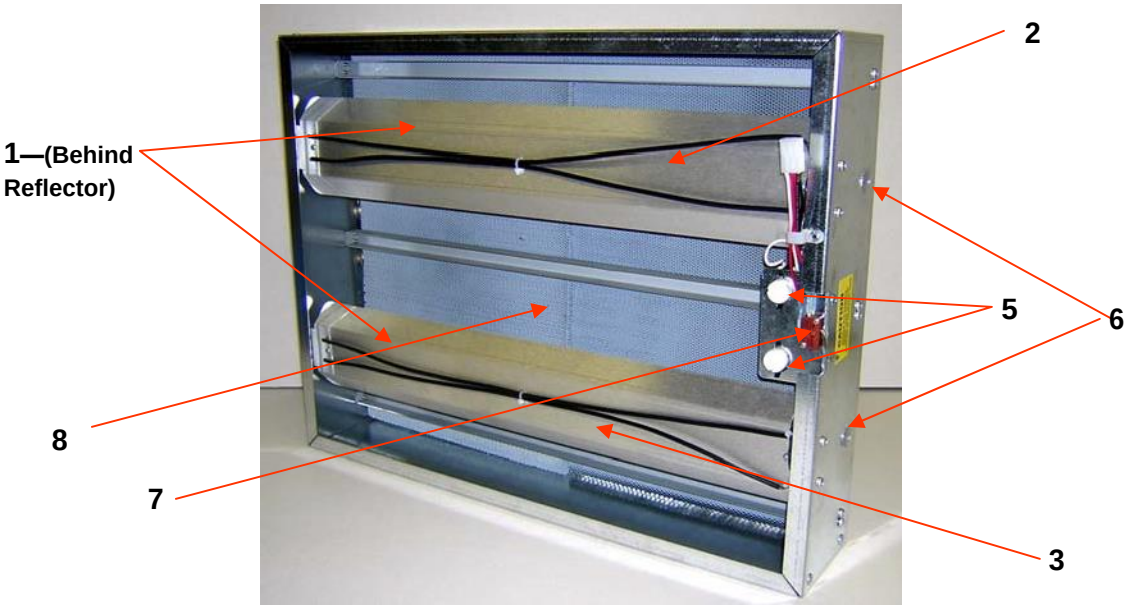

ITEM	PART NO.	QTY.	DESCRIPTION	RATING
1	600003-06*	2	20 Watt UV Lamp	G20T10, 20 Watt
2	600003-64	1	Lamp Reflector, Right	
3	600003-68	1	Lamp Reflector, Left	
4	600003-31*	2	Starter Socket	
5	600003-09	2	Starter	110 Volts, 22 Watt
6	600002-06	2	View Plug	
7	600003-03	1	Micro Switch	125 Volts, 5 Amps
8	600002-59	1	Aluminum Titanium Dioxide Grid	

* - Not Visible

PRESSURE SWITCH ADJUSTMENT

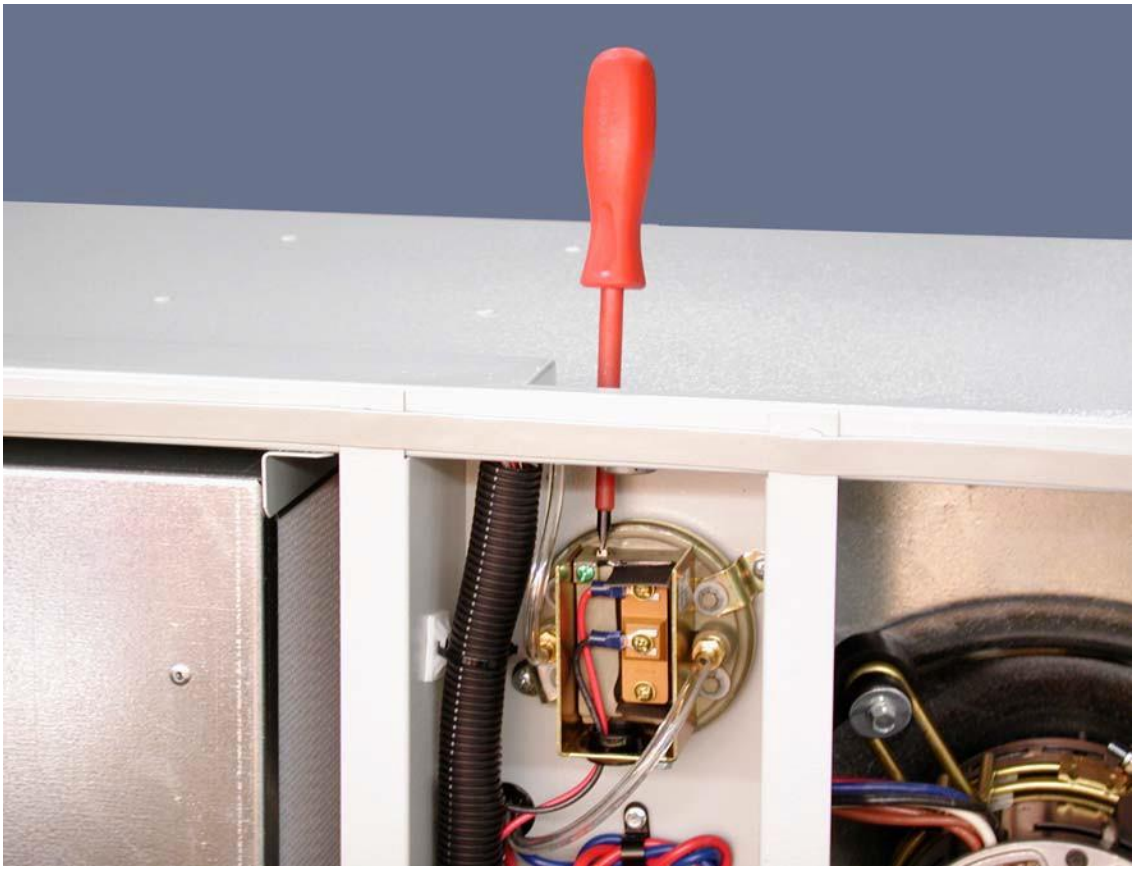

If a change to the factory set point is needed, proceed as follows:

DISCONNECT POWER TO UNIT.

Remove the snap-on cover from the conduit enclosure by loosening its retaining screw and pulling firmly at its bottom end. Turn the slotted adjustment screw at the top of range spring housing clockwise, to raise the set point pressure, and counter-clockwise, to lower the set point. Limit adjustment to 1/4 turn each time. Raise the set point if the switch indication for filter change appears to occur too soon; lower the set point if it does not indicate soon enough.

APPENDIX A: FILTERS

SCOPE:

The particles and gases are so small that the capture velocity of any air cleaning device is approximately one diameter of the intake grill size. Therefore, utilizing multiple units to direct and assist in moving the polluted air toward and into the other unit, will assure a quick cleaning of the space. The technique used to capture and neutralize exhaust fumes and all forms of dirty air from the contaminated environment is often referred to as a "race track" pattern of directed air flow.

The quantity of units needed is determined by the cubic footage of the bay in which the vehicle is parked. Most often, eight air changes are adequate, which means every seven minutes you will have a change of air through the air cleaners. (See distributor for formula information)

The technology used to capture and neutralize the soot and gases is a progressive filtration system explained in the following text.

PREFILTER: The *AirHAWK* is equipped with an extended surface pleated prefilter type 24” x 24” x 4"(NOM). The media is dual-component consisting of natural and synthetic fibers. An expanded metal reinforcement shall be laminated to the air heavy side. A heavy duty, moisture resistant, beverage board shall be used to encase the frame. It is rated at MERV 11 when tested in accordance with ASHRAE 52.1 and 52.2 Test Standard. *AirHAWK* part number is 600500-19.

PRIMARY FILTER: The *AirHAWK* is equipped with a high-efficiency, extended sur- face filter based upon 0.3 micron size particle. The media is manufactured with high efficiency, micro-fiberglass media. Thermo-plastic separators are inserted between each pleat to provide an aerodynamic area for airflow and to stabilize the media. A heavy duty, corrosion resistant, durable plastic frame encapsulates the media. Spe- cialized media sealant, bonds the media pack to the frame. It is rated at MERV 16 based on ASHRAE 52.1 and 52.2 test standards. Size is 24” x 24” x 12"(NOM). *Air- HAWK* part number is 600500-18.

GAS PHASE FILTRATION: The *AirHAWK* is equipped with a carbon filter that is a combination 50/50 blend of activated carbon and potassium permanganate on zeolite. The housing consists of 23-1/2” x 23-1/2” x 7-3/4” 16-gauge aluminized steel, with header, that holds eight replaceable disposable trays. The pollutants from diesel exhaust, unspent diesel fuel, sulfur-based compounds, nitric acid, and nitrogen dioxide shall be adsorbed into the material and removed from the air stream. The two materials shall adsorb and oxidize the chemical compounds and have a gross weight of 26 lbs. Care should be taken to ensure the preceding filters are properly sealed so as not to contaminate the carbon filter with soot or other debris. Part number 600500-01.

APPENDIX B: PHOTO-CATALYTIC OXIDATION CHAMBER

SCOPE:

Photo-Catalytic Oxidation (PCO) is a technology that provides chemical-free oxidation of volatile organic chemicals (VOC's), and microbes. It changes these chemicals into carbon dioxide (CO_2) and water. Developed by Sandia Laboratory and the National Renewable Laboratory and used by the Department of Defense for destroying toxic organic compounds (VOC's). It utilizes the activation of a catalytic surface with ultra-violet UV lamps having a spectra less than 390 nanometers (nm).

The photo-catalytic oxidation chamber (PCO) utilizes a grid made of aircraft aluminum honeycomb material with 1/8" cells, 3/4" thick. There is 70 square feet of surface area. This grid is impregnated with titanium dioxide (TiO_2) into the cell area and on the total surface area (70 sq. ft.) of the grid or substrate. This (TiO_2) application shall be rugged enough so as not to flake off or deteriorate over time and should be washable (if necessary) with mild soap or Windex and water.

This surface area of the grid or catalyst is illuminated with two UV lamps of at least 3 milliwatts/CM2. The lamps are UV-C 254 nanometers and have a life expectancy of 7000 hours.

DO NOT LOOK DIRECTLY AT LIT LAMPS WITHOUT PROPER EYE PROTECTION.

MISC:

Unit cabinets are manufactured with 16 gauge steel of clenched or welded construction. Units will have pre-drilled flanged holder for accepting 3/8" threaded rod for mounting. Door access panels shall be hinged for entry to both the filter and motor blower compartments. Unit is equipped with four-way adjustable diffuser grilles manufactured of extruded aluminum. Cabinet has industrial powder-coated finish.

Motor blower shall be direct-drive, forward curved blades; 1 H.P. 3000 CFM, single phase, permanent split-capacitor motor, automatic reset thermal protection. Motors are ball-bearing style, 230 Volts, 9 amps.

APPENDIX C: LAYOUT CONFIGURATIONS

Figure 3
Circular Air Patterns
Using *Air Hawk* Models

The following unducted layouts depict common air circulation patterns, using *AirHAWK*-models to achieve optimum work area contaminant reduction.

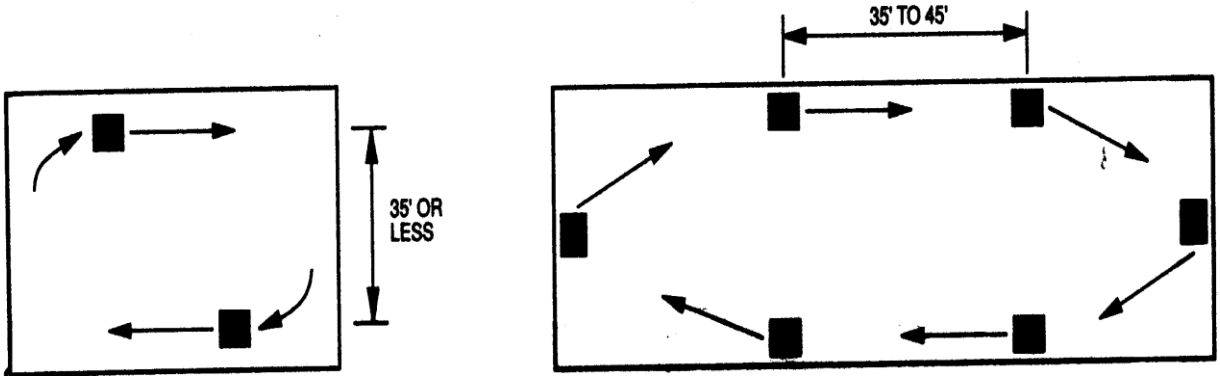

Figure 3 shows the most common unducted configuration, as well as one of the most effective. It is frequently used in medium to small areas where the more easily controlled throw of the *AirHAWK* is necessary. Staying within the dimensional con- straints prevents smoke "pooling" in the middle of the room.

Also, see pages 16-17

IF YOU HAVE ANY QUESTIONS ABOUT PROPER LAYOUT OR INSTALLATION, PLEASE CONTACT YOUR SALES REPRESENTATIVE OR THE MANUFACTURER.

GENERAL AIR CHANGE GUIDELINES

Contaminant generation rates, when quantified by weight/time, are helpful in determining the air change rates.

Exhaust ventilation rates in an existing facility are valuable in gauging the qualified air change rate. If the contaminant is currently controlled by simple exhaust, compare the capacity of these fans with the proposed air cleaning capacity. Air cleaners installed at a height of 9 feet to 18 feet will be more effective than ceiling exhaust fans on a CFM to CFM basis. The comparison does, however, give a gauge of the expected contami- nant reduction.

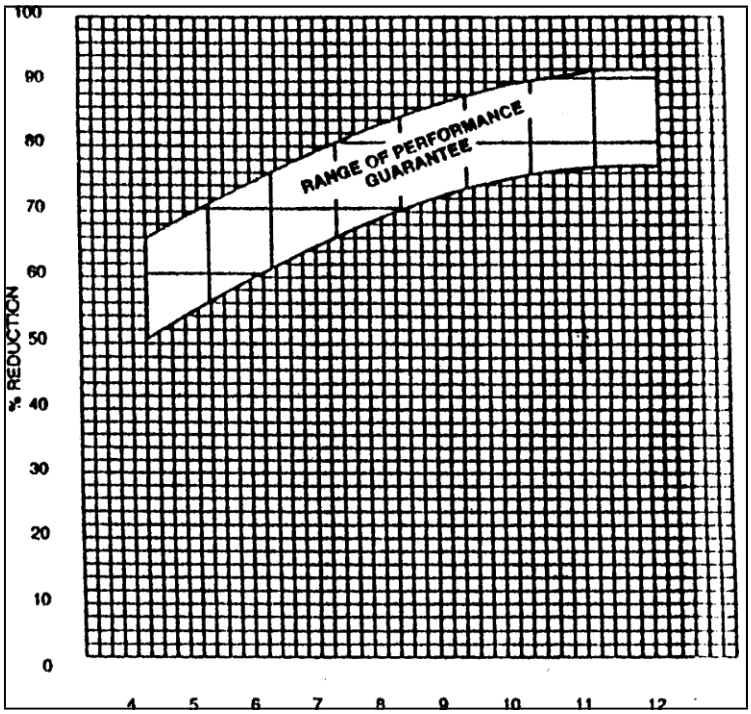

Air changes per hour within Volume under consideration

Caution: Even with a properly engineered unducted air cleaning system, there should be adequate fresh air supply to the room. This is necessary to control odors and gases which could otherwise build up from people and process. The minimum fresh air makeup rate with an unducted system should be .25 to 1.5 CFM per square foot area or as specified by applicable codes.

Table 1-1

Air Change Guidelines

Air Changes Per Hour	Contaminant Generation
4-6	Light
6-8	Medium
8-12	Heavy

The air circulation pattern itself could also impact the air change rate. The pattern should be continuous and should provide coverage over the entire area. If the original capacity selection does not provide enough equipment to accomplish this, additional units should be specified.

After determining the CFM capacity requirement of the unducted system, the number of units must be determined by the following formula:

$$\text{Number of Units} = \frac{\text{System CFM Requirement}}{\text{Unit CFM Rating}}$$

The nominal airflow rating for *AirHawk* self-contained units are shown in Table 1-2 below.

Table 1-2
Nominal Airflow Ratings
Self-Contained *AirHAWK* Unit

Model	Unit CFM Rating
3000-XL	3000 CFM

It is possible to mix unit types in an unducted system to accomplish the desired airflow pattern.

Proper design of the air circulation pattern is the item most critical to the success of the unducted system. The placement of the specified number and types of units is just as important as the total CFM requirement of the unducted system. For maxi- mum performance of unducted units, several guidelines apply:

EQUIPMENT SELECTION & PLACEMENT

1. Control of the unducted unit discharge air is critical to the performance of un- ducted systems. The effective "draw" area of an unducted *AirHAWK* is extremely limited when compared to the distance of outlet "throw". The reason for this is the higher velocity from the outlet and the ability to channel the discharge into a nar- row angle. A good pattern will move the contaminants generated between units to the inlet of the next unit in the pattern of the system, then from unit to unit through- out the room.
2. The four-way diffusers on the *AirHAWK* discharge allow unit airflow direction. Adjustment of these diffusers establishes the airflow pattern in an installation. Correctly placed units can be made ineffective by improperly adjusted outlet vanes.
3. Heavy smoke sources deserve special attention in unducted system design. Unducted units can often be concentrated in areas of heavy loading while still maintaining a good airflow pattern. Individual units can be placed slightly "downwind" of a heavy smoke source in order to maximize capture. Extremely heavy sources may be candidates for source capture while unducted units handle the balance of the smoke.
4. Air guide panels can be used quite effectively to improve the air cleaner perform- ance. These prevent air from being blown past the unit while concentrating all of the inlet "draw" out front where it is most effective.
5. Units should be hung so that the outlets are from 9 feet to 18 feet above the floor. At this level they are much more effective in cleaning the air close to the breathing zone. In addition, service is easier to perform at this level.
6. If possible, units should be located on columns and/or column lines to minimize exposure to overhead cranes and other traffic.
7. Existing airflow sources should be used to supplement the pattern established with the *AirHAWK*. Space heaters, air conditioning outlets, and makeup air sys- tem outlets can establish strong air patterns which must be considered in the un- ducted layout.
8. When smaller areas within a larger building are the only ones which require con- trol, they can be curtained from the ceiling down below the *AirHAWK* mounting level to form an adequate enclosure. Air changes are calculated based on the en- closed volume. The enclosed volume must be large enough to accommodate the outlet throw of the *AirHAWK* or smoke will be blown out the enclosure.
9. It is possible to clean selected volumes in an open room without using curtains, but the layout must be carefully designed to prevent the spread of smoke to the rest of the building. These applications are likely candidates for air guide panels and right angle discharge plenums.
10. Auxiliary fans can be used to supplement the airflow pattern, (cleaning small work areas, turning corners, etc.), created by the *AirHAWK* units.

RECOMMENDED PREVENTIVE MAINTENANCE

FILTERS:

Filter changes – or at least checking the filters for contaminant levels – are recommended as follows:

Pre-Filter:	3-6 Months or 300 hrs, or as needed.
Primary Filter:	Every 24-36 months or 900 hrs, or as needed.
Gas Phase Carbon Filter:	Every 24-36 months or 900 hrs, or as needed.

The red light on the front of the unit is pre-set at the factory to light when static pressure is such that inspection of the filters should occur. NOTE: replacement trays for the Carbon Filter are available so the purchase of the entire filter is not necessary.

LAMPS:

The ultra-violet lamps in the photocatalytic oxidizer are recommended to be changed every 7000 hours of operation, or at one-year intervals, whichever comes first. It is also recommended that the lamp starters be changed at the same time as the lamps.

MOTOR:

The motor in the *AirHAWK* unit is self-contained and permanently lubricated and no further PM service is necessary.

REORDER INFORMATION FOR FILTERS AND LAMPS

P/N	FILTERS
600500-19	FILTER, PRE 24" X 24" X 4", MERV 11 PRE-FILTER
600500-18	FILTER, PRIMARY 24" X 24" X 12", MERV 16 4V PRIMARY
600500-01	FILTER, CHARCOAL BLEND 24" X 24" X 8", GAS PHASE
600500-16	REPLACEMENT TRAY FILTERS FOR 600500-01 - 8 REQUIRED

P/N	UV REPLACEMENT LAMP
600003-06	UV BULB (2 NEEDED) - Minimum annual replacement recommended.

TO RE-ORDER CALL

CLEAN AIR CONCEPTS

1-800-875-5440

DIMENSIONS

26-7/8" h x 24-5/8" w x 62-7/8" long

Total shipping weight of Model 3000 XL:

281 lbs w/PCO - 269 lbs w/o PCO

Hanging Weight

261 lbs w/PCO - 249 lbs w/o PCO

CLEAN AIR CONCEPTS
11449 DEERFIELD RD.
CINCINNATI, OH 45242
800-875-5440

AirHAWK LIMITED LIFETIME WARRANTY

AN INDUSTRY FIRST: The manufacturer of the *AirHAWK* Air Purification Systems is so sure of its product quality and design, that it offers a Lifetime Warranty.

This **Limited Lifetime Warranty** applies to the *AirHAWK* 3000XL units, excluding replacement filters and PCO bulbs. Warranty terms are subject to the following conditions.

•Filters are to be replaced on a scheduled basis and cannot exceed intervals determined by the manufacturer and the filter replacement indicator on the unit.

•PCO lights are to be changed every 7000 hours or at one year intervals as required by the manufacturer.

•*AirHAWK* Filters and bulbs are proprietary in design and material composition, and are to be purchased from the manufacturer or its authorized distributors.

.

*Limited Lifetime Warranty excludes misuse and abuse, natural disaster, war, acts of terrorism, and also excludes labor needed to make repairs. Parts must be returned “pre-paid” to the manufacturer for reconditioning or replacement at the manufacturer’s discretion.

Manufacturer will “pre-pay” freight to return item to the customer. Service on the unit must be performed by a qualified technician. This warranty is limited to the original owner. All warranty information must be completed on the form below and returned to the manufacturer within 30 days of purchase and/or installation of unit(s) to ensure warranty activation.

WARRANTY FORM

WARRANTY FORM

Warranty Returned To Manufacturer On: ___/___/ 20___

To Activate Warranty Clip Here and return bottom form to manufacturer

\- -- -

Company/Department Name:____

Customer Address:__________________________________City:_________________State: _____

Zip: ________

Email Address: ____

Unit(s) Serial #: _____________ _____________ _____________ _____________ _____________

_____________ _____________ _____________ _____________ _____________

Installation Date:______/______/20____

Mail: **Clean Air Concepts - AirHawk Warranty**
11449 Deerfield Road
Cincinnati, OH 45242

Fax: **513-247-2502** **Email:** **warranty@airhawksystems.com**