Vmi Vaporless

VMI Manufacturing, LLC

99 LD-3000

High Capacity Line Leak Detector!

Flow rates over 200 GPM • Application: 3 & 5 Horsepower Submersible Pumps

- Any Fuel*
  - Alcohols, Biodiesel, Aviation, Gasoline, Diesel
- Any Pump
- Any Pipeline System
- Integrated Check Valve / Pressure Relief
- Combined Rigid and Flexible Pipe
  - Certification up to 502 gallons
- Rigid Pipe only
  - Certification up to 406 gallons
- Smallest profile
- 24-month warranty
- Now Available! Factory Certifications for Installation and Annual Testing**
- Field Adjustable Leak Threshold

U.S. Patent No. 4,966,190 • Designed and Manufactured in U.S.A.

New Certification Applicable with Any Pipe Configuration:

Largest volume / longest line and now Certified for combination of rigid and flexible pipe up to 502 gallons. The 99 LD-3000 is certified for the following pipe: 1171 feet of 3" I.D. rigid pipe, up to 406 gallons; 260 feet of 3" I.D. flexible pipe, up to 96 gallons; 1431 feet combination of rigid and flexible pipe, up to 502 gallons.

Longest Guarantee:

The 99 LD-3000 series shares the longest guarantee available in the industry with the Vmi 99 LD-2000 and 99 LD 2200 series leak detectors. For 24 months after installation, the 99 LD-3000 is guaranteed to see a 3 GPH @ 10 PSI leak.

Now with Quick Purge Line Feature:

At installation, the 99 LD-3000 is open, ready to purge the line system. After line is purged, one screw is removed to enable leak detection function.

* See Technical Specifications

** Contact Factory for Details

VMI Manufacturing, LLC
8700 East Long Mesa Drive
Prescott Valley, Arizona 86314
Website: www.vaporless.com

Toll Free: 800.367.0185
Phone: 928.775.5191
Fax: 928.775.5309
Email: sales@vaporless.com

PEI MEMBER

Electronic Line Leak Detection Upgrade!

The 99 LD-3000 may be upgraded in the field to eliminate thermal induced slow-flow, provide submersible shut-down, and alarm notification to site monitoring equipment. Request information on the ISM-4080, an easy upgrade for existing or new installations. The ISM-4080 also stages turbines and controls solenoid valves for loading racks and marine applications. If there is no need for staged turbines, solenoid valve control, alarm notification or submersible shut-down, request information on the ARM-4073 to eliminate false alarms only.

Field Adjustable Leak Threshold:

All Vmi mechanical line leak detectors have been factory assembled and tested to meet the EPA leak detection threshold established during certification testing. Abnormal field conditions such as high line resiliency (high bleed-back), pump pressures over 40 PSI and high head pressures affect line leak detection sensitivity. Additionally, wear affects performance of leak detection over time. To meet these issues, Vmi established through certification testing, the ability of field technicians to adjust Vmi MLLDs to compensate for field variables and normal wear. Please read Technical Bulletin 032805 for specific instructions on this feature.

Easy Installation!

The 3” inlet of the 99 LD-3000 allows the leak detector to be installed in the discharge port of 3 - 5 HP submersible pumps. The discharge of the 99 LD-3000 is 3” male thread; Height - 16.25 inches. Width - 7.86 inches. Weight - 29 pounds; Can be installed by one person. Now with easy access to check valve for field replacement. The 99 LD-3000 is available with flange fittings instead of threads as Part # 99 LD-3000\FL.

Integrated In-Line Check Valve / Pressure Relief:

Allows the leak detector to compensate for a defective submersible pump pressure relief or check valves that allow drain-back into tanks. The integrated pressure relief valve of the 99 LD-3000 will hold 30 PSI in the line by itself.

One Way Poppet Flow Path!

Isolates pump turbulence from line leak detection at pump start-up. The hardened stainless-steel poppet does not dimensionally change due to thermal conditions encountered during station operation (precision metering change is insignificant down to -20 degrees F).

Reverse Ratio Piston / Poppet Combination:

The leak detector has a smaller diameter piston area than the poppet it is attached to. This allows the leak detector to stay in the fast fill position (3 GPM) to a higher pressure while compressing vapor pockets and stretching flexible line faster, resulting in less time to full flow.

Smaller Volume / Faster Response Piston Size:

Results in one-fourth the volume of fuel to replace when in leak search and one-fourth the volume to return to the line when pump is turned off. This results in achieving faster full flow to dispensers and faster resets to detect leaks.

VMI Manufacturing, LLC
8700 East Long Mesa Drive
Prescott Valley, Arizona 86314
Website: www.vaporless.com

Toll Free: 800.367.0185
Phone: 928.775.5191
Fax: 928.775.5309
Email: sales@vaporless.com
PEI MEMBER

VMI Manufacturing, LLC

Technical Specifications 99 LD-3000

Fuels:

- Gasoline, 100% methanol*, 100% ethanol*, up to 15% MTBE
- Any combination of the above
- #1 or #2 diesel, kerosene, Jet A* or JP-4*, AV Gas* and Biodiesel* (all blends).
- * When used with Biodiesel, any alcohol fuel concentration above 20%, Jet A, JP-4, or AV Gas, order part # LD3-SSVS for stainless steel fittings and stainless-steel vent tubing. For chemical applications other than those listed above, contact factory.

Certified to meet EPA 3 GPH @ 10 PSI:

- Rigid pipe up to 406 gal., 1171 ft. of 3" id.
- Flexible pipe up to 96 gal., 260 ft. of 3" id.
- Combination of Rigid and Flexible pipe up to 502 gal., 1431 ft. of 3" id.

Construction:

Forged steel body; Steel alloy; Forged steel threads.

Cylinder Assembly:

Anodized 6061-T6 Aluminum

Internal Parts:

- Anodized 2011-T3 Aluminum, 6061-T6 Aluminum;
- Acetron GP; CDSM 1026 and DOM 1026 steel; 17-4 stainless steel

Seals:

Low drag, stainless steel spring energized teflon seals

O Rings:

U.L. Approved V9702-Viton Type B Fluorocarbon

Metering Pin and Poppet:

17-4 stainless steel

Check Valve:

Acetron GP, Viton F Seal

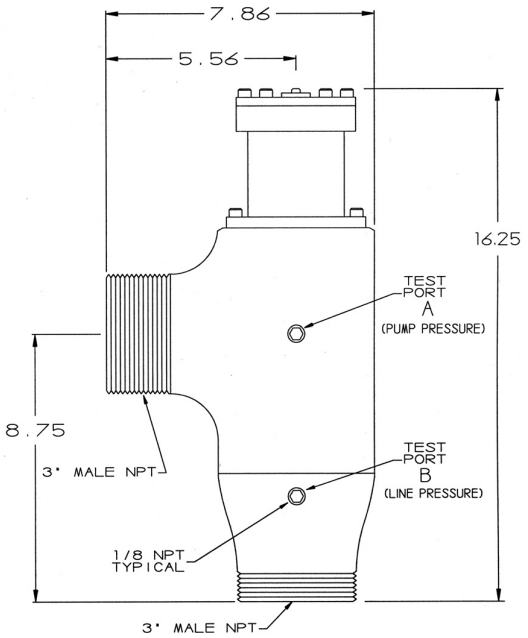

Pressure Relief:

Stainless Steel, 29 PSI pressure relief. This pressure is in addition to the pump pressure relief.

Inlet: 3" male **Outlet:** 3" male

- Certified to handle 12+ feet of head pressure.
- Exceeds EPA specifications for 3 GPH @ 10 PSI hourly test.
- Vent line must be unobstructed, leak tight and connected to headspace of tank, not to be subjected to pressure or vacuum.
- Combination line check/pressure relief prevents drainage into the tank.

VMI Manufacturing, LLC
8700 East Long Mesa Drive
Prescott Valley, Arizona 86314
Website: www.vaporless.com

Toll Free: 800.367.0185
Phone: 928.775.5191
Fax: 928.775.5309
Email: sales@vaporless.com

PEI MEMBER