HERRINGBONE AUTO-ID INSTALLATION

Version - June 2010
For Software Version V3.00

Part Number - 39-0210

HERRINGBONE AUTO-ID INSTALLATION: **INDEX**

INDEX

GOOD PRACTICE: Mains Supply.

- A separate mains supply and earth running directly from the consumer meter is essential.
- Avoid routing the mains cable to the power supply close to other supplies especially those providing intermittent current- motors that are starting and stopping continually or high power heaters with thermostatic control.
- Terminate in a sealed, fused, double pole switched outlet fitted with a 13Amp (BS 1362 Standard) fuse or trip. A 3-pin ring main socket is not suitable in parlour conditions. All mains cabling must be contained in a firmly secured durable conduit.
- All mains work should be referred to a Qualified Electrician.

Power Supply: Siting.

- Fix the power supply to a wall or suitable brackets in a well ventilated area sufficiently high to avoid physical contact or damage, leaving a gap of at least 250mm (10") between the top of the power supply casing and the ceiling.
- Position the power supply so that the output (low DC voltage) cables are as short as possible even if this means extending the mains supply.

ATL Power Supply: Output Voltages.

- ATL power supply outputs are factory set and should not be adjusted.

Auto-ID / Pegasus PSU	60 Watt 12vDC PSU
Input: 230vAC	Input: 110vAC - 230vAC
Output: *Nominal 12-15vDC*	*Output: Nominal 12vDC*

Control, Power and Data Cables and Conduit.

- Cables must be kept as short as possible running directly from point to point. Cut out any excess cable rather than leaving it coiled.
- Where ever possible cables should be contained in a waterproof conduit using the correct csa cable specified in the diagrams.
- Entries must be made into the bottom of power supply or control casings but never into the top. This will invalidate the warranty.
- Strip existing cables back to bright copper before connection.
- Keep multicore cables away from other cables especially those carrying mains or heavy currents. Cross only at 90° where necessary and do not enclose in conduit with other cables.
- Keep feeder cables and coaxial cables in separate conduits.
- Make sure diodes are fitted to all feeders, pulsators and solenoid valve. These should be fitted as close as possible to feeder motor or solenoid coil.

Good Installation Practice: Adopting good engineering practice during installation will avoid most problems with electronic control systems.

- Check the existing wiring carefully. Do not assume that it will be up to the required standard. It may have been extended with thinner wire and be unable to carry the current without a volt drop.
- Termination of cables in enclosures. Do not coil excess cable in enclosures. Loops are good transmitters of interference.
- Do not use a single aperture gland for several cables. Moisture can migrate through the gaps between the cables and cause damage to internal electronic components. Moisture damage caused in this way is not covered under warranty.
- Never run low volt power, data or coaxial cables which are connected to ATL control units alongside mains cables. Even if they have been disconnected, they can still be carrying and transmitting interference.
- Do not place data or coaxial cables connected to ATL control units within existing conduits with other cables connected to other systems; especially unsmoothed power cables. This is a prime source of interference especially if connected to pulsators or feeder motors without diodes installed. NB - When a solenoid coil is switched off the reverse voltage is generally 10 times the peak supply voltage, with a 24vDC supply, this can be in excess of 300 volts.
- Interference is most likely on mains systems which exhibit volt drops when the parlour load is switched on.
- Variable speed drives are becoming very common. Make sure that they are installed to the manufacturers instructions. Screened cable must be used between the drive and any motors, if not electronic systems can be affected.
- RFID antennas are looking for signals around 130Khz. Variable speed drives often operate at frequencies around this value. Good installation of the variable speed drive circuit is essential to prevent interference.
- Mains earth supplies can be a source of interference. Check the voltage between the mains earth and the neutral. If there is a voltage above 3-4volts, there is a possibility that interference will be present. Earth problems of this nature can usually be avoided by fitting earth trips and separate earth electrode, which is isolated from the mains earth system.

Preventing the Reading of Ear Tags through the Parlour Walls

If cows have access to the back of the parlour walls, whether this be on exit from the parlour or in cubicles, the Auto-ID system may read ear tags through the wall. This depends entirely on the thickness and construction of the walls. Where this is the case, the back of the parlour walls should be clad with galvanised steel sheets to prevent this occurring. For more advice and information, please contact ATL.

HERRINGBONE AUTO-ID INSTALLATION: **1**

Auto-ID Power Supply and Start Scan Switch

To aid clarity, the diagrams on the following pages do not show the power supplies or the start scan switches.

Connect the feeder power supply according to the MicroMarque3S installation manual and the Auto-ID power supply to the Auto-ID Interface unit shown on Page 10 of this manual. (Connection references D1 ... D4).

A Scan switch is fitted to the base of the MicroMarque3S as standard, but up to 3 optional external scan switches may be fitted as shown below. (Connection reference E1...E3 on the Auto-ID Interface). If the external scan switch is fitted on site, the cable gland entry hole must be drilled into the bottom edge of the interface casing.

Start Scan Switch connections:

Switch fitted to bottom edge of the MicroMarque3S:

Wires are Black (Common), White and Red

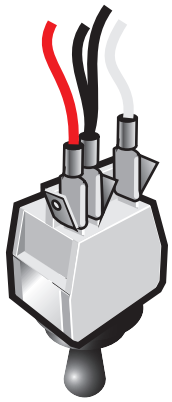

External Scan Switch (optional extra):

Wires are Black x 2 (common), White and Red pre-fitted to crimp terminals. If the scan side does not correspond to the parlour side, reverse the White: Red wires or rotate the switch body.

Up to 3 external scan switches may be fitted to a system either by connecting back to the Interface board or by daisy chaining from one switch to the next. In the latter case piggy-back terminals are fitted to the switches as shown in the illustration.

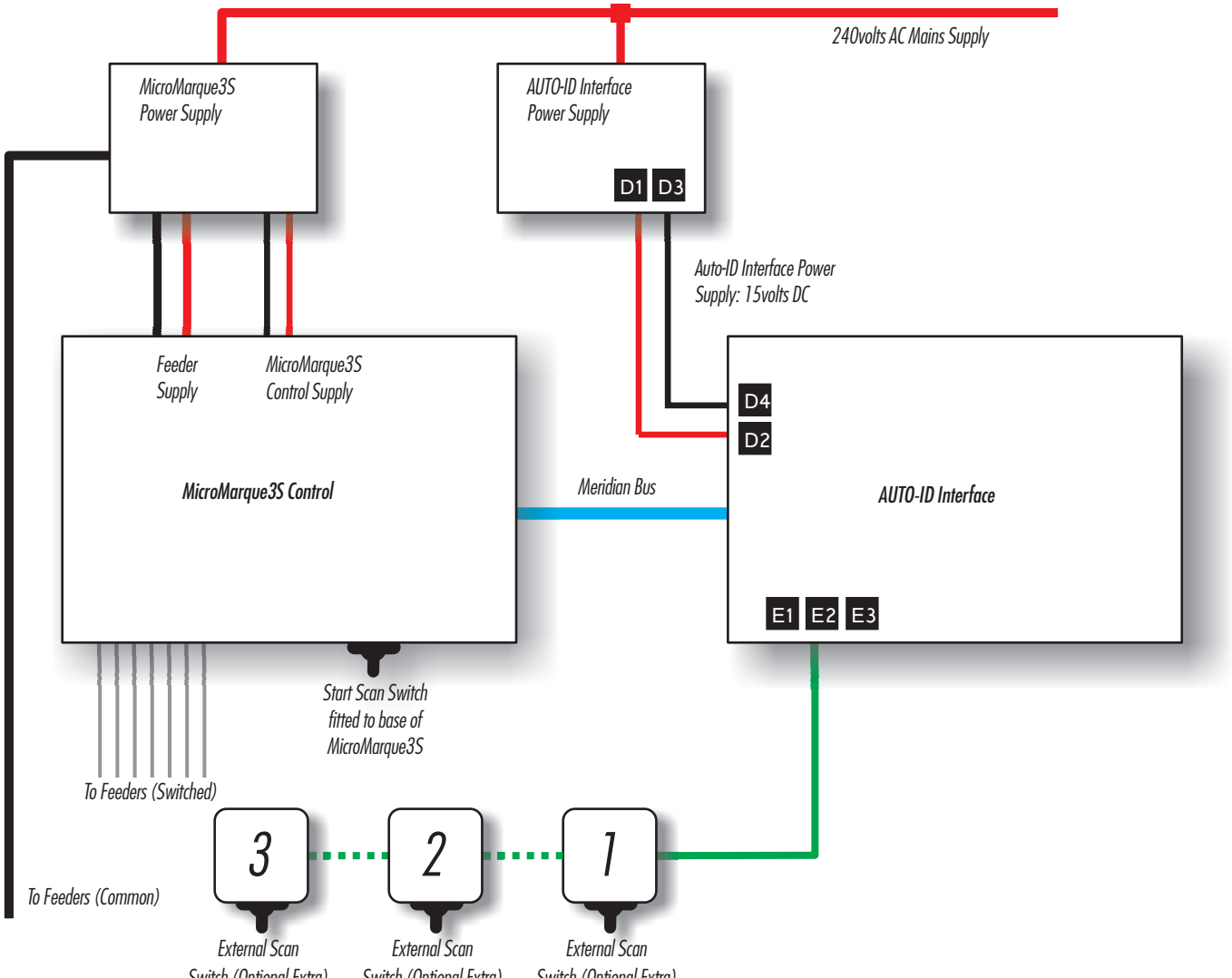

HERRINGBONE AUTO-ID INSTALLATION: **2**

Antenna Position and Installation

Installing ATL Auto-ID is a straightforward procedure and experience shows that when antennas are installed correctly systems work perfectly at switch on. Those that don t, invariably have a problem with antenna positioning which compromises both the tag reading range and the reading speed.

Before fitting the antenna read the manual and work strictly to the instructions given for the type of parlour stall.

The Auto-ID control can read 10 tags every second so it is able to scan a complete side very quickly. The most effective performance is achieved when the tags are read just as the cow enters the stall providing the lateral position and the height of the antennas are as specified in the installation manual.

How a tag is read

There are two areas adjacent to an antenna where the tags are read. These are illustrated by the two lobes on the diagrams below. The larger extends beyond the stall and reads the ear tag when either face is facing the antenna. The smaller lobe reads the tag when its edge is facing the antenna. The lobes extend over the full length of the antenna but not beyond the bottom or top.

Antenna Lateral Position:

30° and 50° Herringbone Parlours: Mount the antenna on the wall so that the imaginary centre line- dotted on the diagram- would pass between the cow s ears.

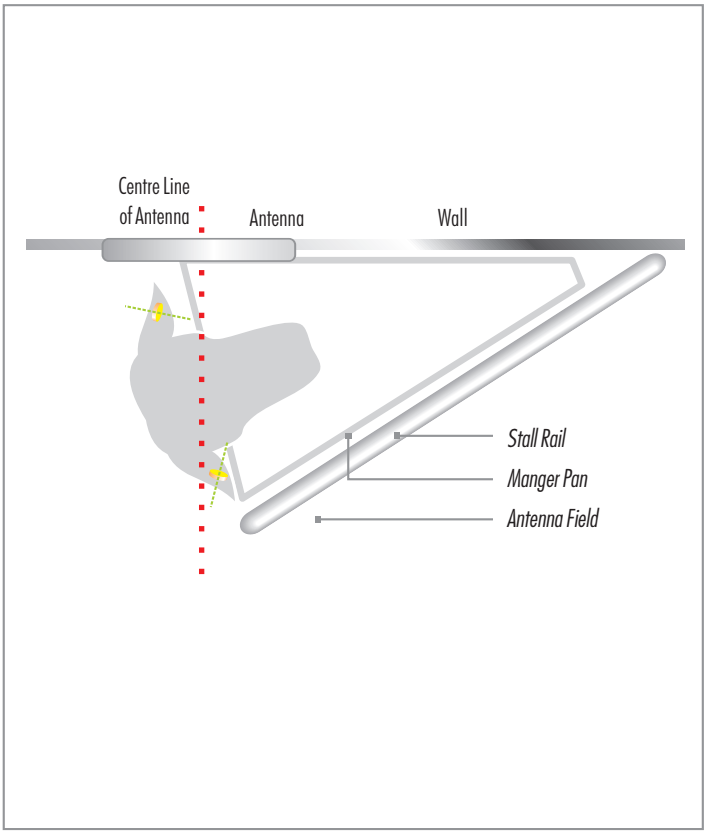

90° Herringbone Parlours: All cows MUST have the ear tags fitted on the same side; ATL recommend the left but the right side is acceptable.

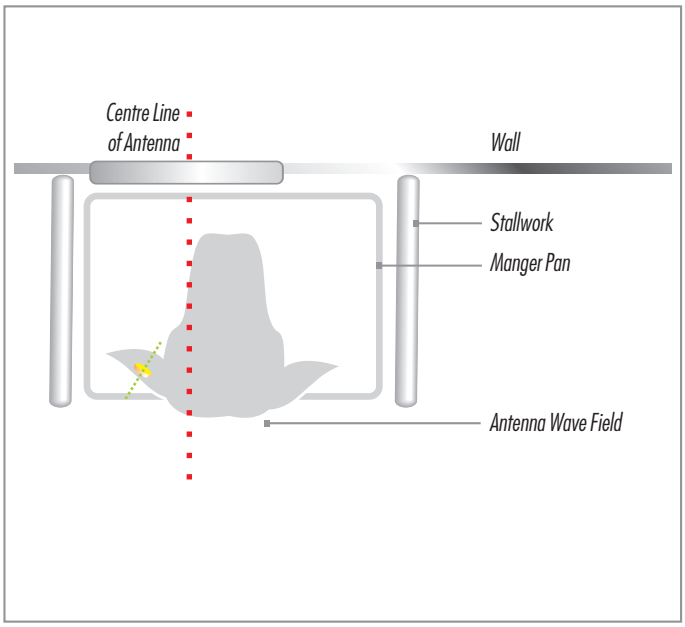

The antennas MUST be fitted so that they are offset from the centre of the stall and as close to the stall divider as possible on the same side as the ear tags.

If feeder down pipe brackets prevent the antennas being mounted in the correct position, then spacers must be used between the brackets and wall to allow the antennas to fit behind. Suitable spacers, 35mm diameter x 15mm long can be made from PVC rod.

Height of antenna

The antenna must be mounted at a height that will enable the tag to be read both when the cow is standing normally and when eating in the manger. The ideal height is 1.5m to the top edge. If the base of the manger is less than 300mm from the floor then the antenna may need to be lowered a little to ensure tag reading when the cow is eating.

The effects of metal on tag read and performance.

Generally steel feeder down pipes have little effect on read range, assuming all stall fittings are similar. If there are variations, for example when a parlour is extended using different feeders or if some downpipes are connected directly to the feeder body whereas others are attached by a plastic or rubber collar, antenna performance could alter radically. Achieving acceptable performance in both stall varieties will require special tuning procedures which will inevitably add to installation costs.

ATL cannot be held responsible for indifferent performance if they are not made aware of parlour discrepancies or if these guidelines or installation instructions have not been followed.

Free advice regarding installation is available by telephone, fax, letter or e-mail. Site visits will be made at the discretion of ATL, but on site and travel time are charged at the prevailing hourly rate.

HERRINGBONE AUTO-ID INSTALLATION: **3**

Stall Select Module Position and Installation

The cable length between the antennae and the Auto-ID Interface is required to be balanced for optimal performance. Therefore, the position of the stall select modules is critical. The following table displays the correct position of the stall select modules and SHOULD BE ADHERED TO IN ALL INSTALLATIONS.

If there are obstructions preventing installation is the correct position, please contact ATL for advice, as changing the position will adversely affect system performance.

Free advice regarding installation is available by telephone, fax, letter or e-mail. If ATL has not been contacted during installation and the stall select modules are NOTINSTALLED in the correct position, adversely effecting performance. ANY remedial work to correct the problem will be chargeable at the prevailing hourly rate.

Number of Stalls	*Stall Select Module Position - Both LHS and RHS*
1	1
2	2
3	3
4	4
5	5
6	6
7	7
8	8
9	8
10	8
11	8
12	8
13	8
14	8
15	8
16	8
17	8+17
18	8+18
19	8+19
20	8+20
21	8+21
22	8+22
23	8+23
24	8+24
25	8+24
26	8+24
27	8+24
28	8+24
29	8+24
30	8+24
31	8+24
32	8+24
33	8+24+33
34	8+24+34
35	8+24+35
36	8+24+36
37	8+24+37
38	8+24+38
39	8+24+39
40	8+24+40
41	8+24+40
42	8+24+40
43	8+24+40
44	8+24+40
45	8+24+40
46	8+24+40
47	8+24+40
48	8+24+40

HERRINGBONE AUTO-ID INSTALLATION: **4A**

20pt Herringbone Parlour: Typical Layout:

The maintain balance with the cable lengths, the Auto-ID Interface has been designed to work with the Stall Select modules positioned opposite stall (8) in 16pt parlours and above.

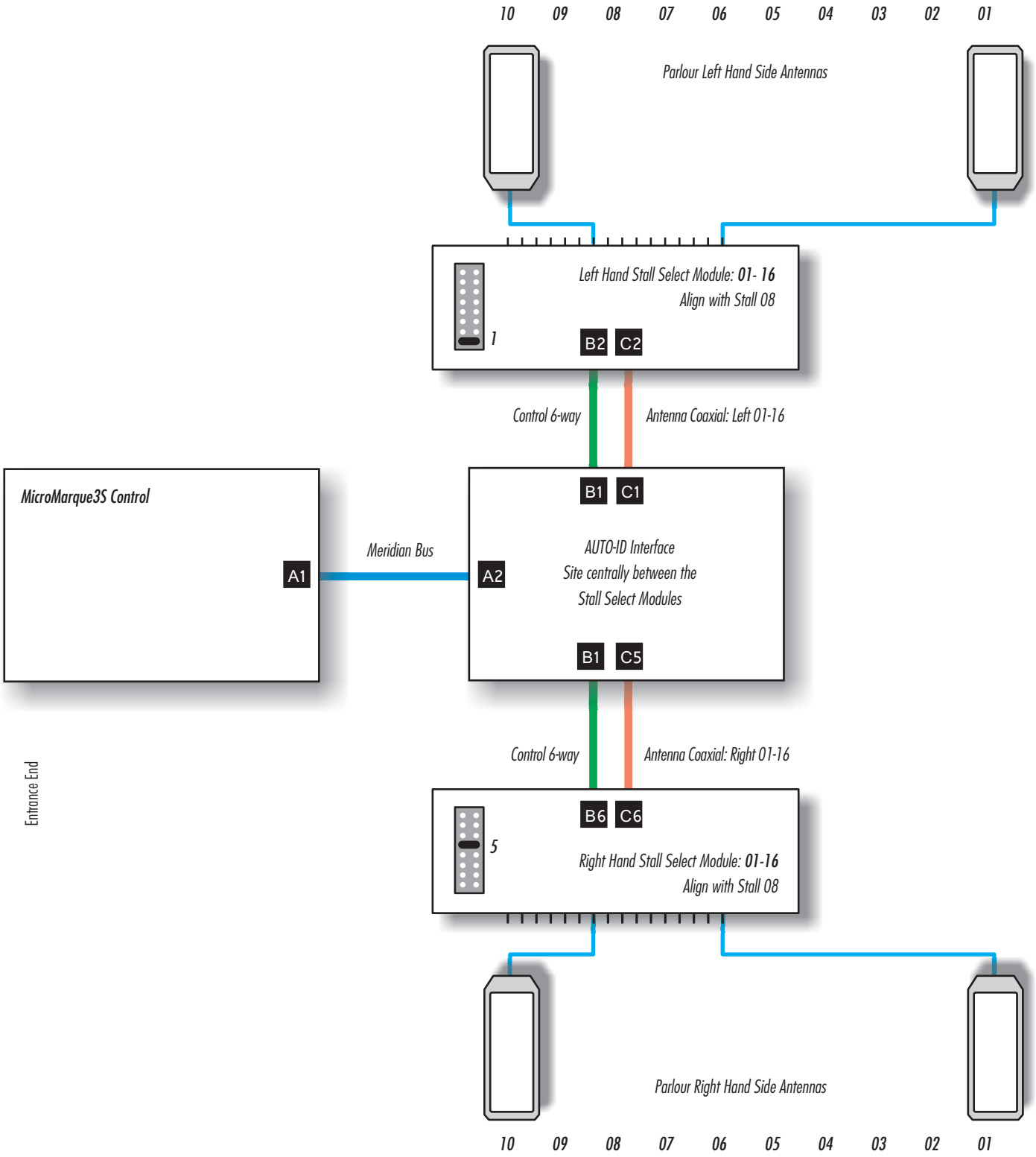

HERRINGBONE AUTO-ID INSTALLATION: **4B**

IMPORTANT - Even though system only has 22 antennas each side, stall select module should be alligned as close as physically possible to stall 24.

44pt Herringbone Parlour: Typical layout:

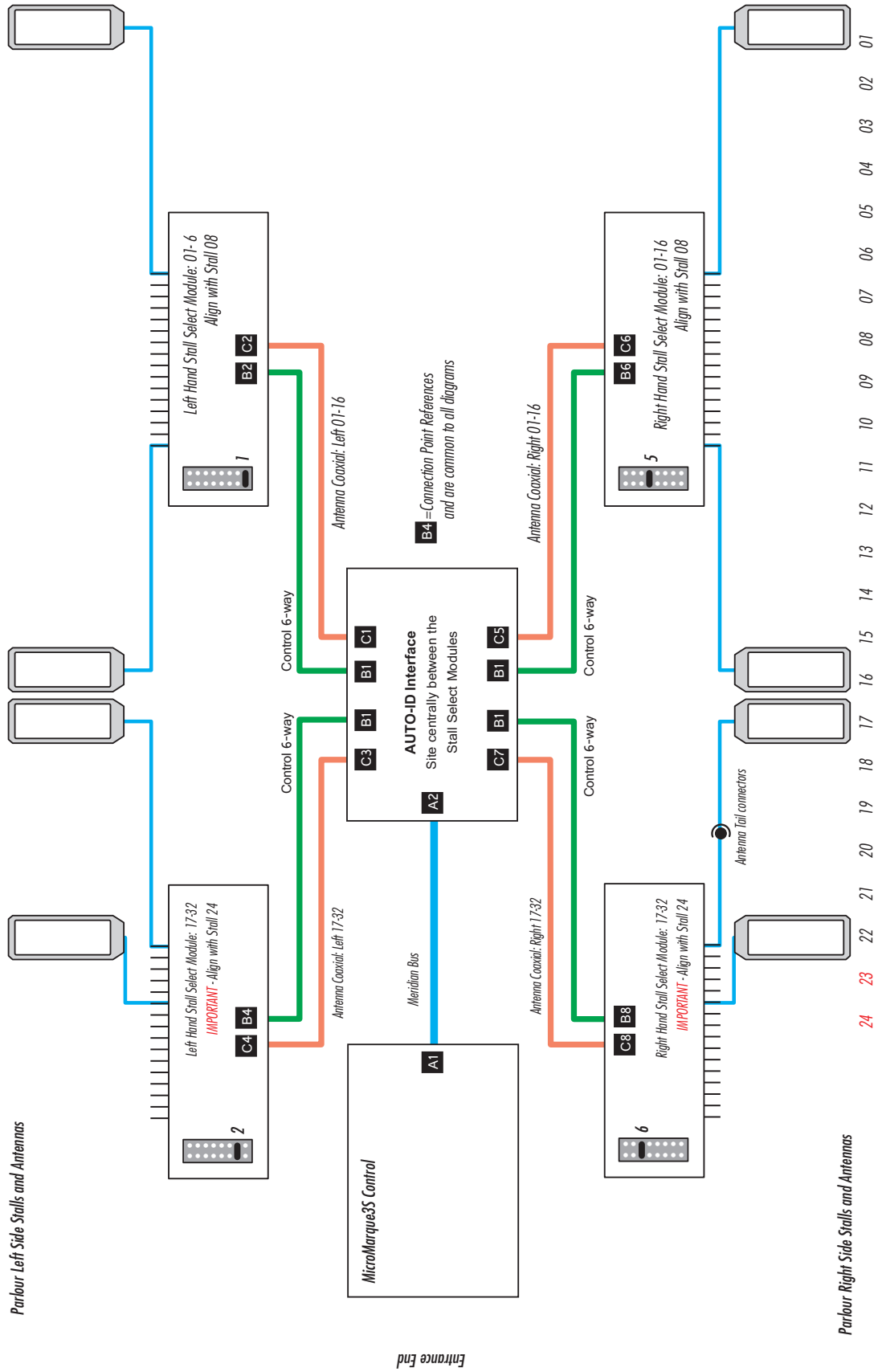

HERRINGBONE AUTO-ID INSTALLATION: **4C**

64pt Herringbone Parlour: Typical layout:

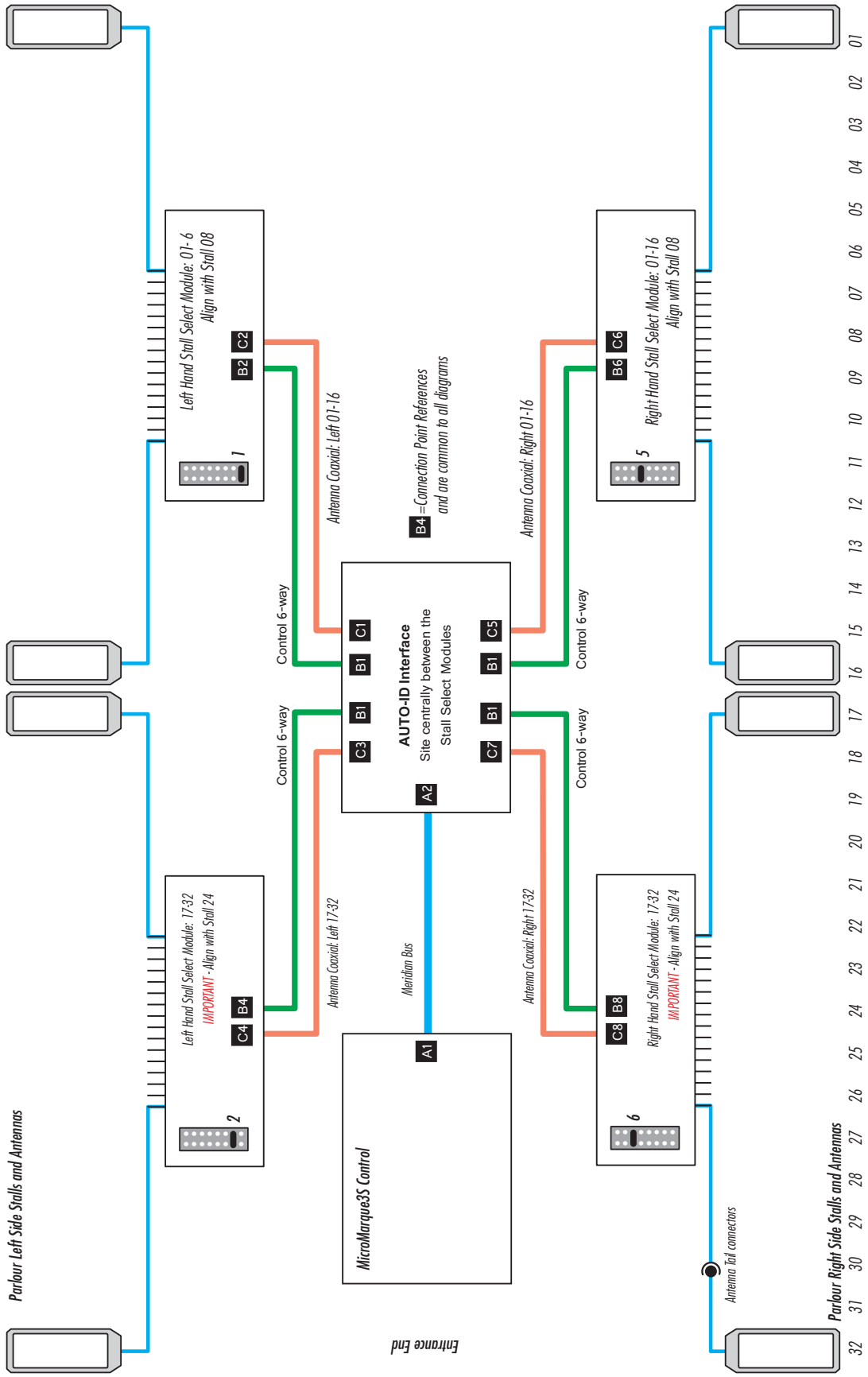

HERRINGBONE AUTO-ID INSTALLATION: **5**

Antenna Positioning: 30° and 50° Herringbone Parlours

Antennas are electronically balanced to suit the steelwork within the parlour and should be positioned as accurately as possible to the dimensions shown below.

Use the stainless steel screws and wall plugs supplied to secure the antennas. Position the 38 x 25mm box section conduit supplied as conveniently high as possible and out of cow reach.

IMPORTANT - Do not run coaxial cables in same conduit as feeder cables. This can cause the Auto-ID system to function incorrectly.

Connect the antenna coaxial tail to a run of coaxial up to the Stall Select module using 2-way connectors supplied. They will fit comfortably inside the 38 x 25mm box conduit. Connect core to core and screen to screen overlapping the ends within the connector to ensure good conductivity.

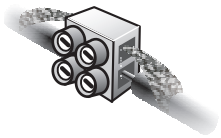

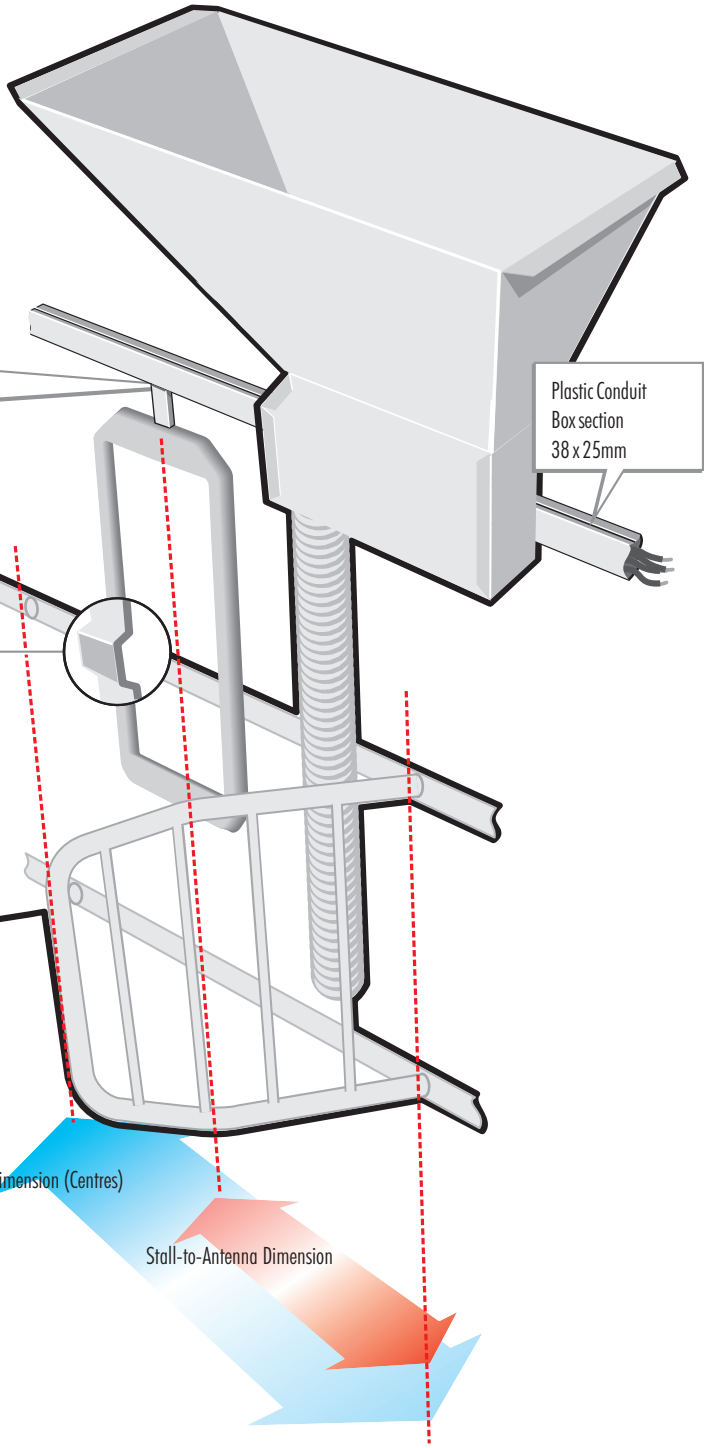

Antennas with cranked side rails are available for parlours with stall support rails - additional charges apply.

6mm x 50mm (2) hole

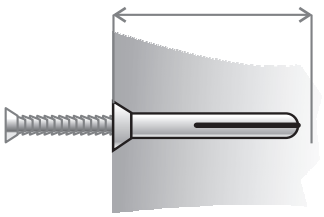

The antenna fixings supplied are drive screws and MUST be hammered not screwed into the plastic plug. Drill a 6mm diameter hole at least 50mm (2) deep to accept the plastic plug. Ensure that the screw is driven fully home and does not bottom on the hole.

Antenna Positioning Guide: Standard Antenna 870 x 380mm (34 x 15)

The top of the antenna should be as close to 1500mm (59) from the floor as possible.

The vertical centre of the antenna should be positioned as follows:

Stall-to-Stall (Centres)	*Stall-to-Antenna Centre*
750mm (30)	550mm (22)
914mm (36)	658mm (27)
1000mm (39)	750mm (30)
1200mm (47)	750mm (30)

HERRINGBONE AUTO-ID INSTALLATION: **6**

Antenna Positioning: 90° Herringbone Parlours

Antennas are electronically balanced to suit the steelwork within the parlour and should be positioned as accurately as possible to the dimensions shown below.

Use the stainless steel screws and wall plugs supplied to secure the antennas. Position the 38 x 25mm box section conduit supplied as conveniently high as possible and out of cow reach.

IMPORTANT - Do not run coaxial cables in same conduit as feeder cables. This can cause the Auto-ID system to function incorrectly.

Connect the antenna coaxial tail to a run of coaxial up to the Stall Select module using 2-way connectors supplied. They will fit comfortably inside the 38 x 25mm box conduit. Connect core to core and screen to screen overlapping the ends within the connector to ensure good conductivity.

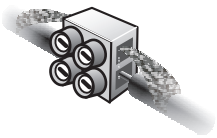

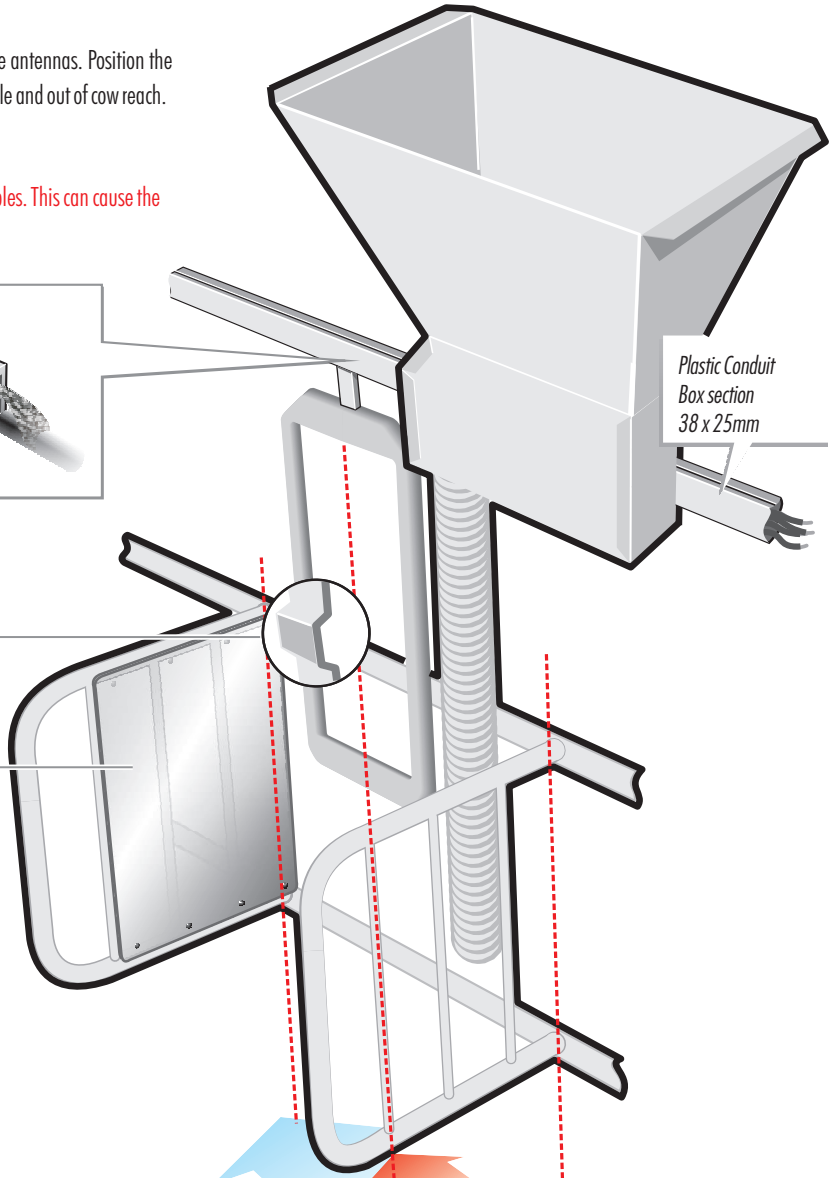

Antennas with cranked side rails are available for parlours with stall support rails - additional charges apply.

Some parlour types may require galvanised steel sheeting securely fixed to each stall divider to prevent cross-reading between stalls. These have to be made to suit the parlour and are not included in the price.

Stall-to-Stall Dimension (Centres)

Stall-to-Antenna Dimension

Antenna Positioning Guide:

Standard Antenna 870 x 380mm (34 x 15)

The top of the antenna should be as close to 1500mm (59) from the floor as possible.

It is recommended that ear tags be fitted universally to one ear - preferably the left.

The vertical centre of the antenna should be positioned as follows:

Stall-to-Stall (Centres)	*Stall-to-Antenna Centre*
680mm (27)	Situate the antenna as far as possible to align with the tagged ear. So, if the tags are fitted to the left ears, position the antenna on the left side of the stall.

Consult ATL before ordering. A site visit is always required.

6mm x 50mm (2) hole

The antenna fixings supplied are drive screws and MUST be hammered - not screwed - into the plastic plug. Drill a 6mm diameter hole at least 50mm (2) deep to accept the plastic plug. Ensure that the screw is driven fully home and does not bottom on the hole.

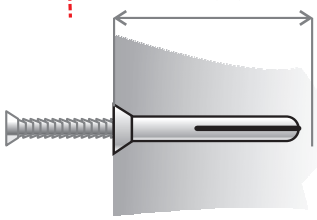

Conduit, Cable and MicroMarque3S Wiring

Standard 38 x 38mm box conduit is included in the installation kit. It may be necessary to seal the antenna tail entry points into the box conduit and any prominent junctions with silicon sealant to prevent water ingress when the installation is complete.

Use only the coaxial and multi-core cables supplied. This is a balanced system in which the cabling plays an important part in tuning the antennas. Changes in the cable specification will have detrimental effects on the system operation. Extra cable is always available from ATL. All cables must be stowed neatly before the installation is tuned and tested.

Adhere to the colour coding for multi-core cables and the connection references (A1) shown in the diagram for a straight forward, trouble-free installation.

Some cables and looms described in the drawings are factory fitted but have been described for reference.

IMPORTANT - Do not run coaxial cables in same conduit as feeder cables. This can cause the Auto-ID system to function incorrectly.

IMPORTANT - Please make sure that diodes are put on all feeder motors, pulsators and solenoid valves otherwise this can cause the Auto-ID system to function incorrectly.

Connecting the MicroMarque3S.

A 2 x twisted pair cable- the Meridian Bus- connects the MicroMarque3S to the Auto-ID Interface, shown on the next page. This cable cannot be substituted. The two Black cores are twisted together into a common connector and the Red and White connected as shown. The Screen is not connected at either end.

Run the control power supply to the MicroMarque3S using 1.5csa minimum cable.

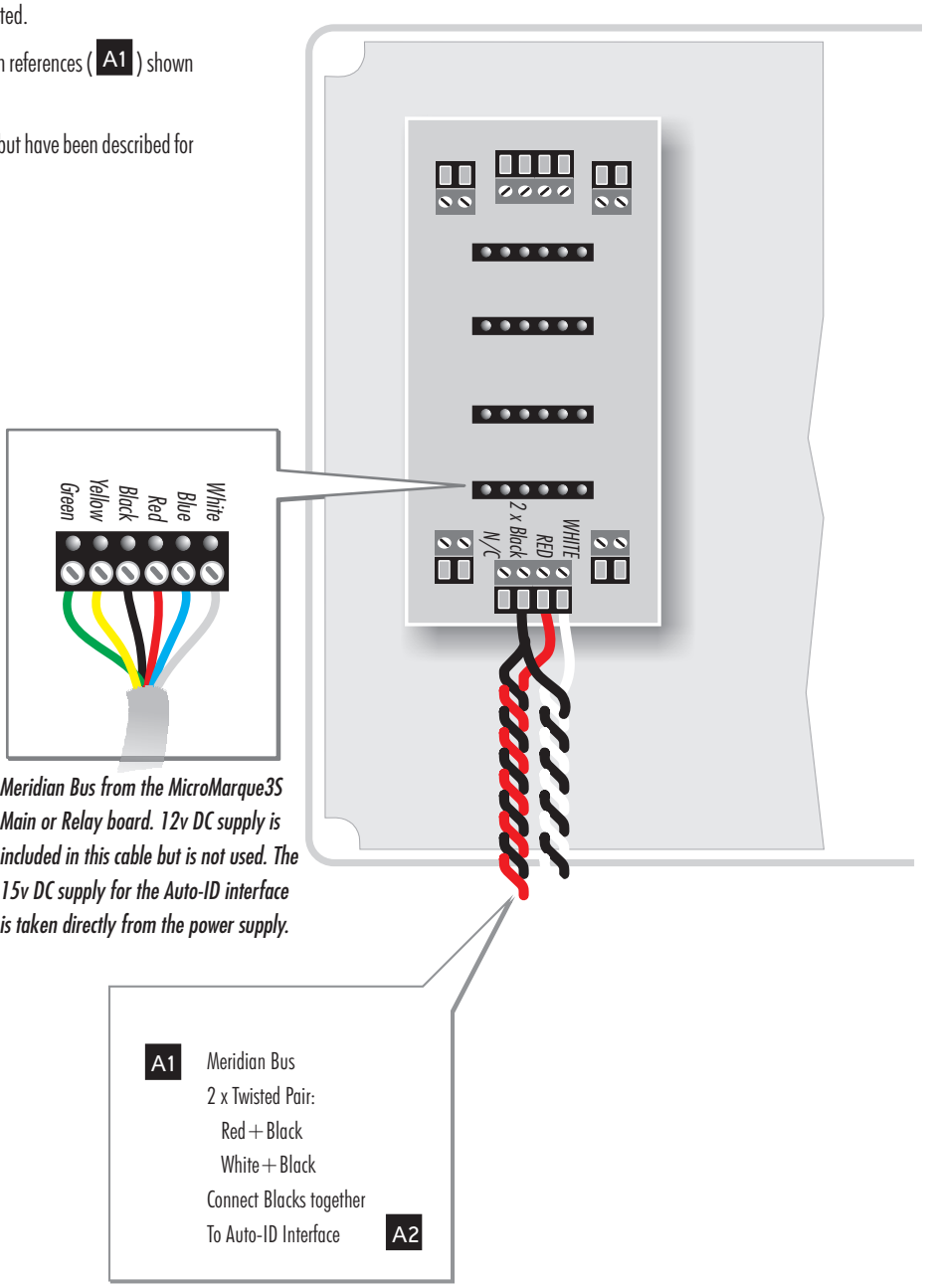

Meridian Bus from the MicroMarque3S Main or Relay board. 12v DC supply is included in this cable but is not used. The 15v DC supply for the Auto-ID interface is taken directly from the power supply.

Installation Sequence

The Stall Select Modules must be located adjacent to stall 08, right and left hand sides and its equivalent on larger parlours (see Page 3), with the Auto-ID Interface positioned equidistant from them. The Interface must not be mounted close to large areas of metal.

- Position and fit the antennas according to the illustrations on Pages 5 and 6 or refer to ATL for special layouts.
- Fit the 38 x 38mm box section conduit supplied as high as possible above the antennas. IMPORTANT - Do not run coaxial cables in the same conduit as feeder cables. This can cause the Auto-ID system to function incorrectly.
- Directly above each antenna, drill a hole 6.5mm (¼") diameter through the lower edge of the conduit. This will be the antenna tail entry. Pass the antenna tails through the holes and lay them neatly along the conduit.
- If the tail will reach the Stall Select Module connectors, trim, strip (as shown below) and fit it. If the tail is too short, cut a pair of connector blocks from the strip provided, strip the ends of an additional piece of coaxial and connect it to the tail by overlapping as shown below. Take the extended tail directly to the Stall Select Module and connect it without leaving spare cable in the conduit. Refer to Page(9).

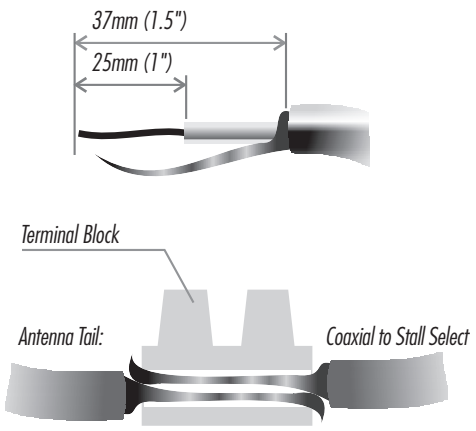

Extending the tail. Screen to screen and core to core. Both screens and cores will now be overlapping ensuring a good, low resistance connection when the screws are tightened.

Referring to Pages (9 and 10):

- Fit the 6-way Control Cable plug to the right hand socket of the Stall Select Module (B2/B4/B6/B8) feeding the cable back to the Auto-ID Interface (B1 is common to B2/B4/B6/B8. See Page 10).
- Through the same conduit, feed a new length of coaxial cable also back to the Auto-ID Interface. Strip the end of the cable at the Stall Select Module and fit to the Common Terminal (C2/C4/C6/C8). Check screen and core positions.
- At the Auto-ID Interface, strip and connect the Common coaxial cable to the appropriate connector (C1/C3/C5/C7. See Page 10).
- Fit the Board Select Jumper to the Stall Select Module according to the table on Page (10).

HERRINGBONE AUTO-ID INSTALLATION: **9**

The Stall Select Module

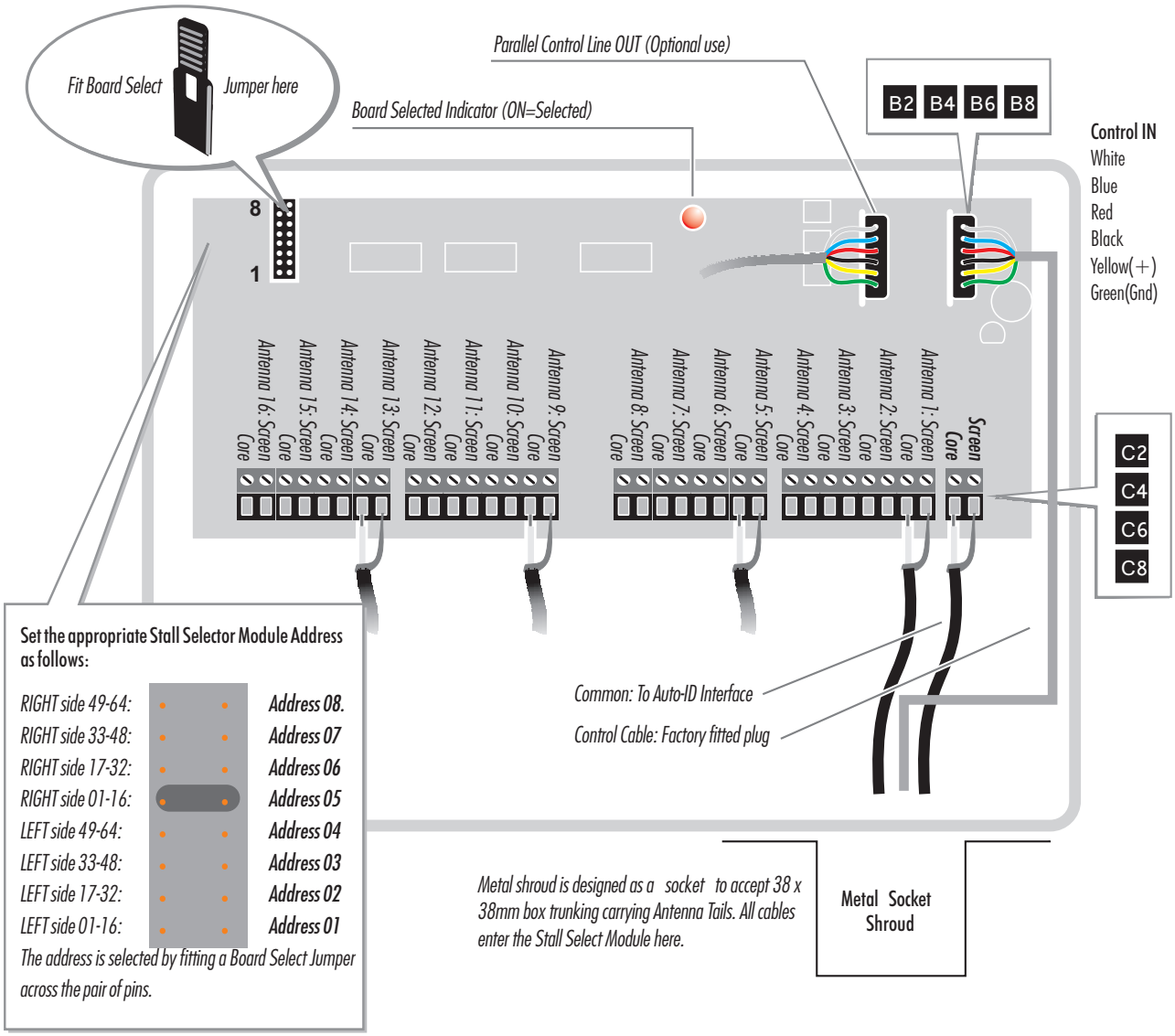

Set the appropriate Stall Selector Module Address as follows:

RIGHT side 49-64:	***Address 08.***
RIGHT side 33-48:	***Address 07***
RIGHT side 17-32:	***Address 06***
RIGHT side 01-16:	***Address 05***
LEFT side 49-64:	***Address 04***
LEFT side 33-48:	***Address 03***
LEFT side 17-32:	***Address 02***
LEFT side 01-16:	***Address 01***

The address is selected by fitting a Board Select Jumper across the pair of pins.

HERRINGBONE AUTO-ID INSTALLATION: **10A**

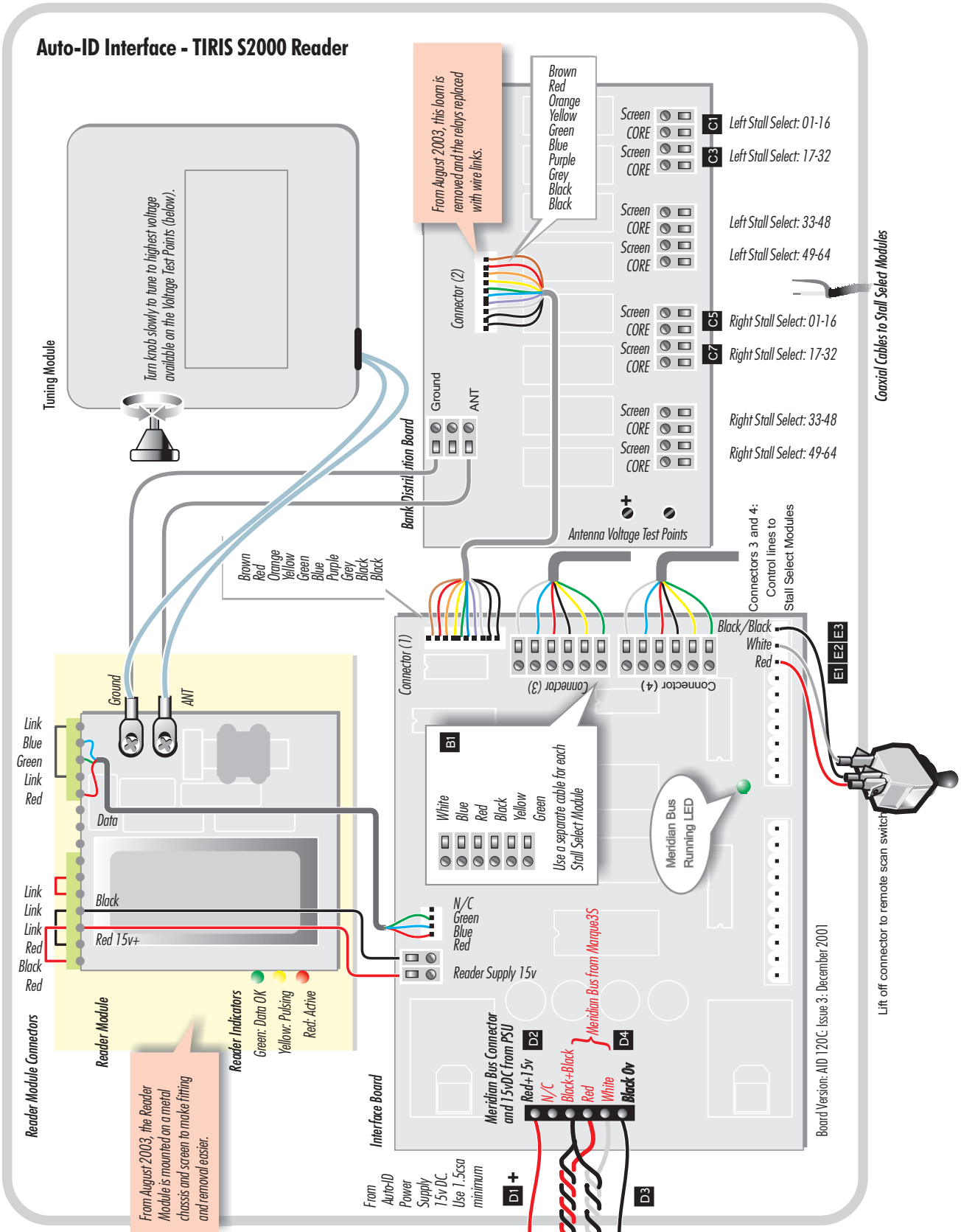

HERRINGBONE AUTO-ID INSTALLATION: **10B**

Auto-ID Interface - ATL HDX Reader

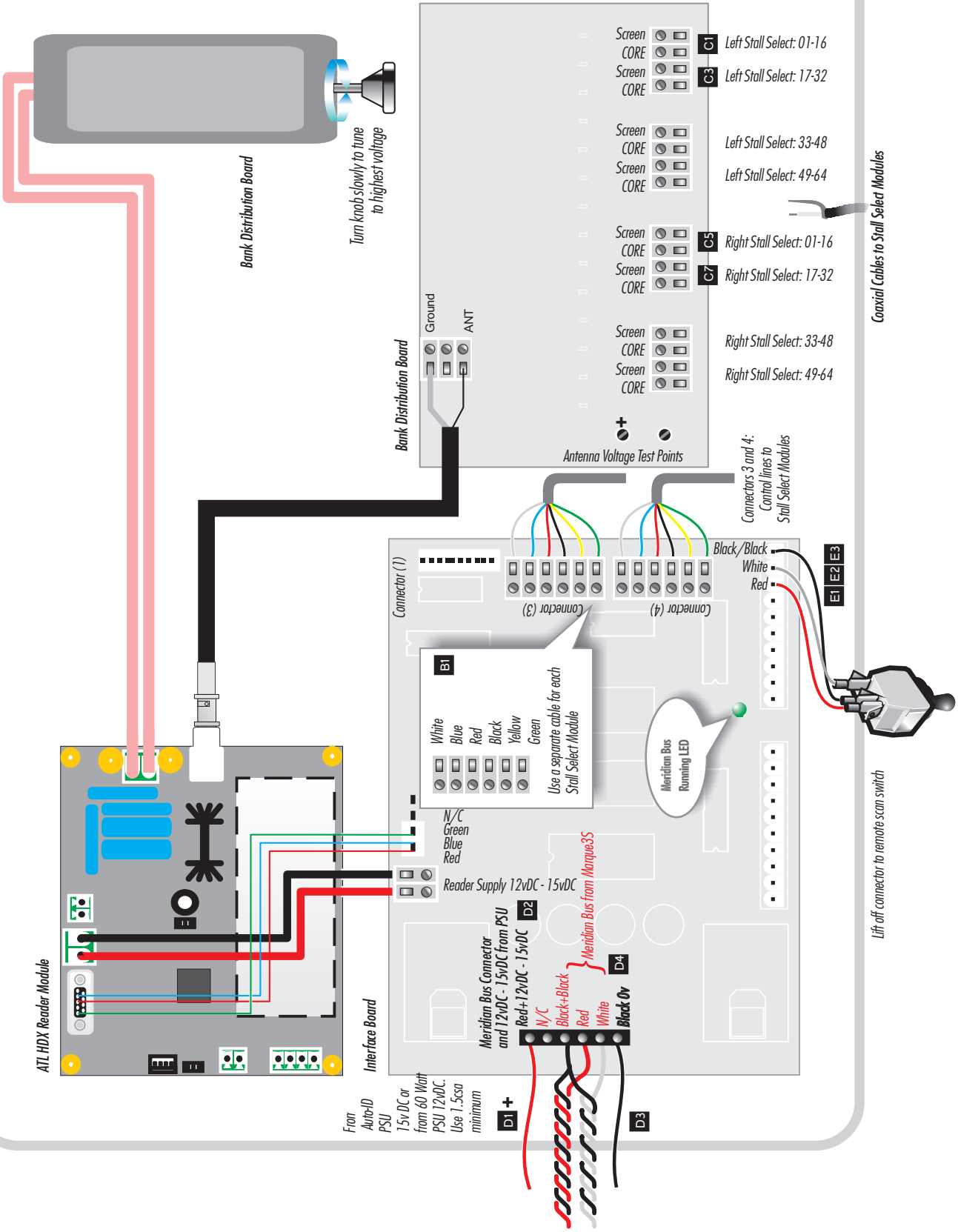

HERRINGBONE AUTO-ID INSTALLATION: **10C**

Auto-ID Interface Auto-ID/Pegasus Power Supply Connections

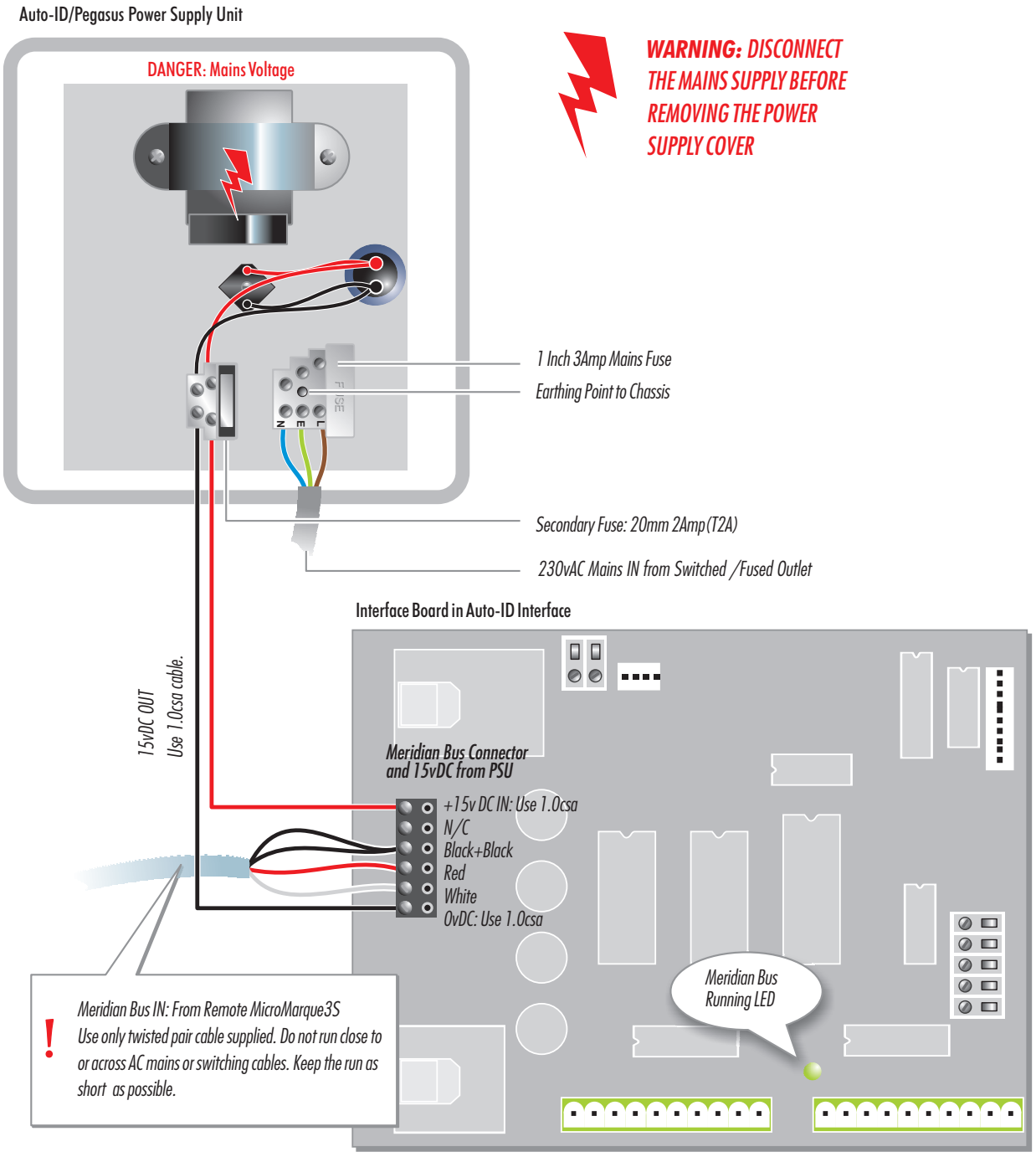

HERRINGBONE AUTO-ID INSTALLATION: **10D**

Auto-ID Interface 60 Watt 12vDC Power Supply Connections

***WARNING:** DISCONNECT THE MAINS SUPPLY BEFORE REMOVING THE POWER SUPPLY COVER*

IMPORTANT - OUTPUT FACTORY SET TO 14vDC TO ACCOUNT FOR VOLTAGE DROP ALONG CABLE LENGTHS.

CONTROL
REGULATED DC
OUTPUTS NOMINAL
12vDC @ 4Amps

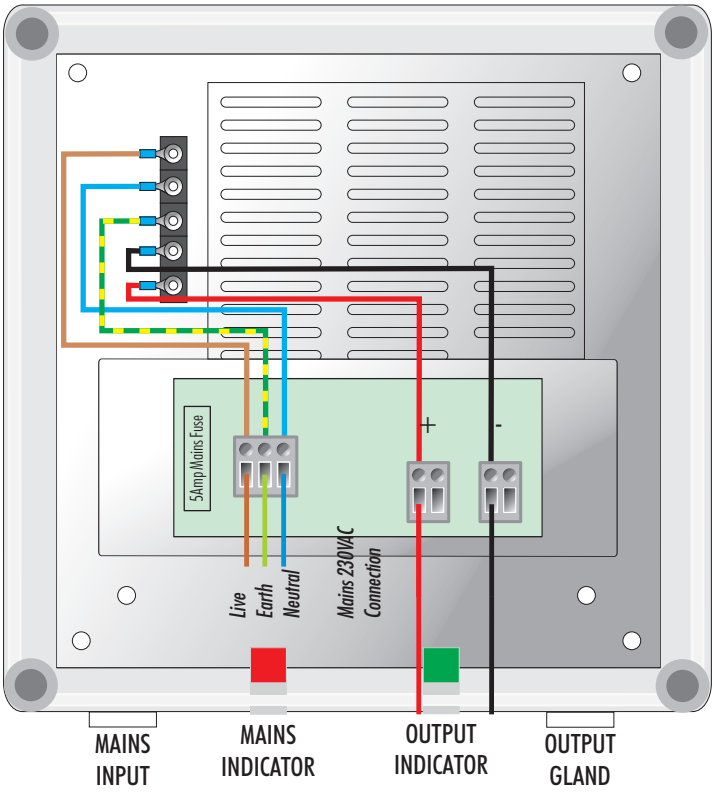

Interface Board in Auto-ID Interface

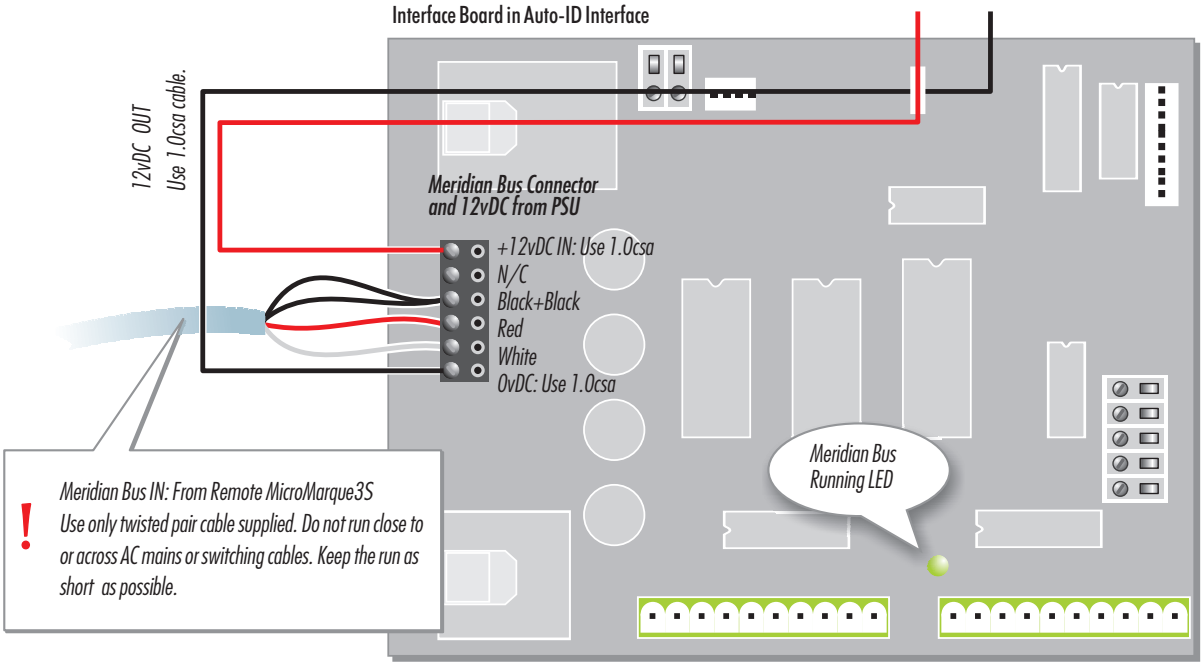

! *Meridian Bus IN: From Remote MicroMarque3S Use only twisted pair cable supplied. Do not run close to or across AC mains or switching cables. Keep the run as short as possible.*

About Subroutines

There are a host of functions available on the MicroMarque3S which, because they are not used frequently do not have specific keys dedicated to them. Instead, they are accessed through the SHIFT + ENTER (SUBROUTINES) key combination and perform as a small part of the computer program. Having achieved their specific task they then return control to the main program.

Some subroutines simply deliver data- usually to the display and their job is done; others require additional key inputs to modify data that will affect the running of the entire system.

Running a Subroutine.

All subroutines are started in the same way:

- Check that the MicroMarque3S is in Program mode- the red indicator on the indicator bar should be illuminated. If it is not, run Subroutine 638 (operates in any mode) which toggles between Program and Feeding modes.
- Press RESET.
- Press and hold down the SHIFT key. Press the ENTER (SUBROUTINES) key. Release the ENTER key; release the SHIFT key. This key combination is shown as SHIFT + ENTER(SUBROUTINES) on the following pages.
  The Yield/Flags window will clear to three underscore marks.
- Key the number of the subroutine required. Ignore leading zeros.
- Press ENTER.

If the subroutine requires additional key entries, follow the instructions on the following pages.

- Press RESET to exit a subroutine.

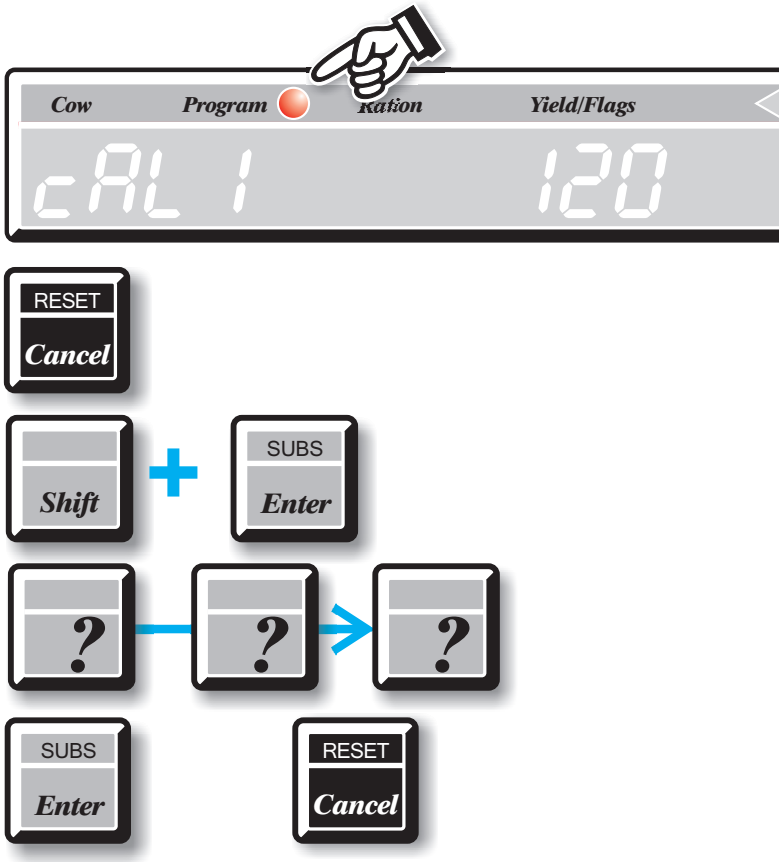

Subroutine 2: Display the Software Version.

The program which 'drives' the MicroMarque3S is stored on a silicon chip inside the machine and is occasionally subject to minor changes. When a change is made the Version Number of the software is updated; your current version may be accessed through subroutine 2. This information is important if repairs are being carried out to the system.

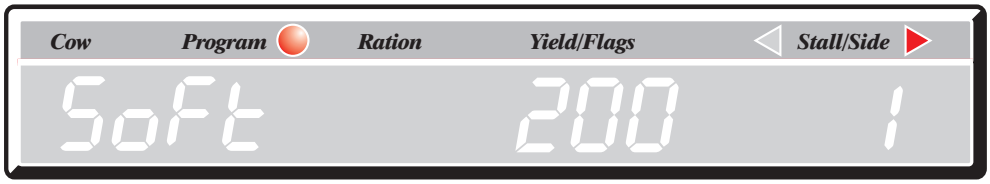

The Software Version Number is displayed in the Yield/Flags window as three digits- 200 in the example. There is a implicit decimal point after the first digit so the version is 2.00

HERRINGBONE AUTO-ID INSTALLATION: **12A**

Subroutine 300: Enabling Auto-ID

The scanning and ear tag reading system may be switched on and off through this subroutine.

- Run Subroutine 300. The display will show 'AId' (AUTO-ID) and the current status- YES' or 'no' (enabled/disabled) will appear in the Yield/Flags window.

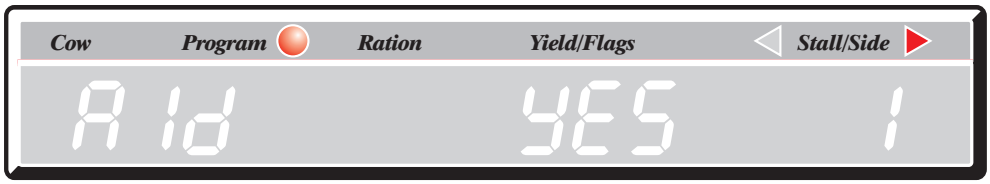

- Toggle between the two states by using the Change key

- Press Enter to store the selection.

Subroutine 304: Turn Ration Pre-feed On and Off.

The Auto-ID system will allow a small portion of feed to be delivered to each cow as soon as they arrive at a stall. This can help to calm nervous cows during the first few days of using the system. All of the cows are fed including those that do not have a ration. The portion of cake that is delivered is subtracted from the cow's actual ration.

- Run Subroutine 304. The current status (YES=on/no=off) will be shown in the Yield/Flags window with the code 'Pre' (Pre-feed) in the Cow Number window.

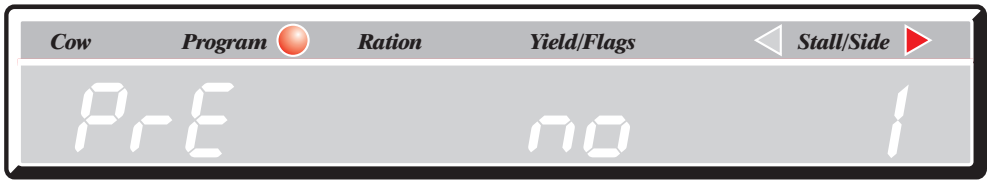

- Turn Pre-feed on or off using the Change key to toggle.

- Press Enter to store the selection.

! During testing, turn Pre-feed OFF.

Enable/Disable Pre-Feed for Auto-ID for Left-Hand Side of Parlour: Subroutine 302: *Default = On*

Please refer to Subroutine 304 for more information.

Check that Program mode is selected.

Run subroutine 302. The message PrEl will be displayed with the current setting - YES or no .

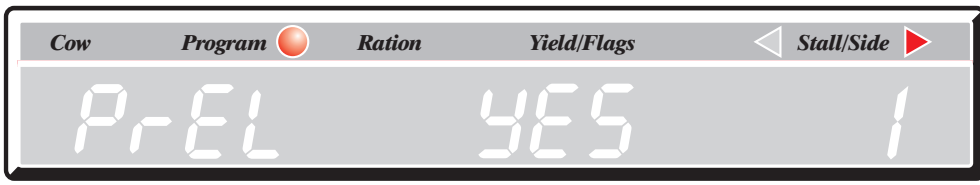

Use the Change key to toggle between YES (Pre-feed ON) or no (Pre-feed OFF).

Press Enter to store the setting.

NB - This is only available on MicroMarque3S software v4.14 or above. Please run subroutine 2 to check.

Enable/Disable Pre-Feed for Auto-ID for Right-Hand Side of Parlour: Subroutine 303: *Default = On*

Please refer to Subroutine 304 for more information.

Check that Program mode is selected.

Run subroutine 303. The message PrEr will be displayed with the current setting - YES or no .

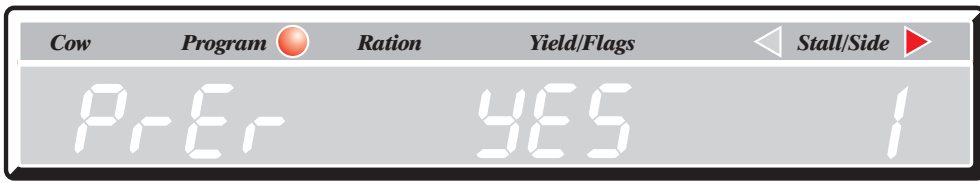

Use the Change key to toggle between YES (Pre-feed ON) or no (Pre-feed OFF).

Press Enter to store the setting.

NB - This is only available on MicroMarque3S software v4.14 or above. Please run subroutine 2 to check.

Create Cow Record during In-Stall Auto-ID Tag Linking Process: Subroutine 308: *Default = On*

Check that Program mode is selected.

Run subroutine 308. The message tLcc will be displayed with the current setting - YES or no .

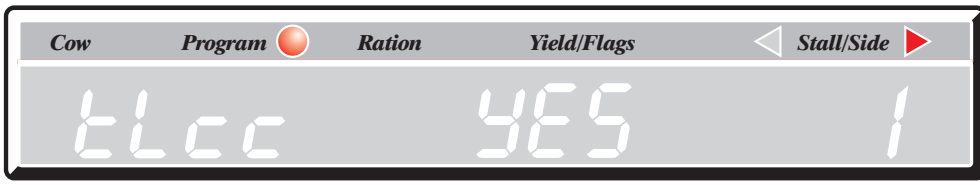

Use the Change key to toggle between YES (Create Cow Record ON) or no (Create Cow Record OFF).

Press Enter to store the setting.

NB - This is only available on MicroMarque3S software v4.29 or above. Please run subroutine 2 to check.

Subroutine 305: Select Antenna and check voltage levels.

This subroutine allows a specific stall and antenna to be selected; the system will activate the antenna continuously and, if an ear tag is within reading distance, the MicroMarque3S buzzer will sound.

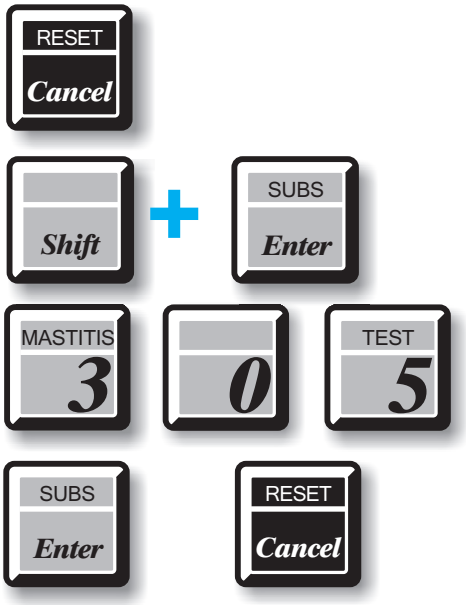

Checking the Voltage Levels.

- Connect a high quality voltmeter set to the 200v DC range across the Voltage Test Points on the Bank Distribution Board on the Auto-ID Interface (see Page (10). Ensure the polarity is correct.
- Reset the MicroMarque3S.
- Run Subroutine 305. The code 'tESt Ant' (Test Antenna) will appear in the Cow Number window, the side will default to the 'reset' side and the stall to number 1. That antenna is now active

.

- The voltmeter should read in the range 90 to 180 volts DC.

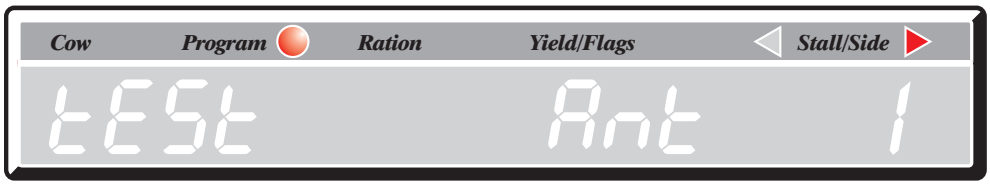

- Slowly turn the tuning knob on the tuning module- it turns in bothdirections- until the highest voltage is achieved. If it is not possible to achieve a voltage level higher than 90 volts, please contact your supplier.
- It is only necessary to carry out the tuning process once. Do *not* repeat for the left hand side of the parlour.
- Press Reset to exit the subroutine.

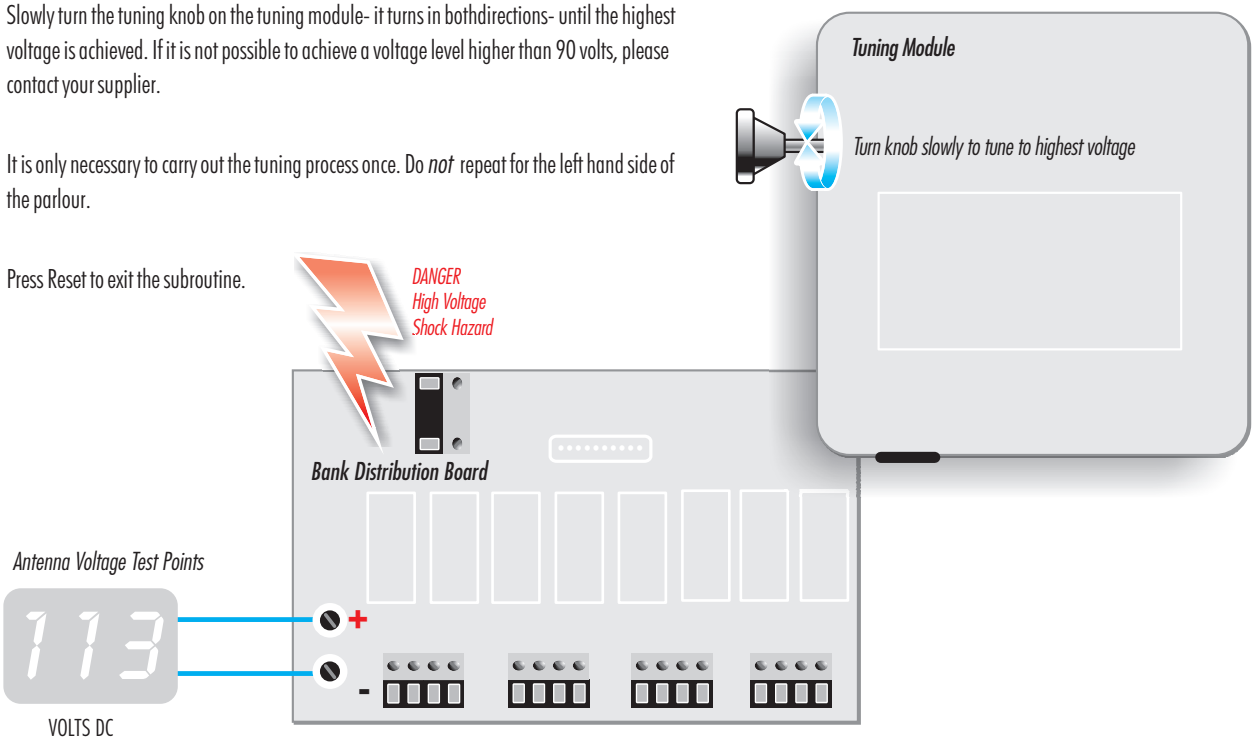

The Stall Lag Facility

Parlours in which the stalls are unusually close together or those that have metal work which tends to distort the scanning field, may occasionally experience two *different* tags being read at the *same* stall. The combination of the parlour structure and cows that swing their heads about can bring an ear tag into the field of an adjacent stall where it will be read.

To overcome this problem the Stall Lag facility double checks the location of each tag. The lag period is determined by the number of stalls you ask the system to check before feeding. So, if the lag is set to 2, stalls 1, 2 and 3 will be checked and confirmed as being consistent before stall 1 is fed. In other words, a lag of 2 reads and confirms 2 stalls ahead of the current stall. With this setting, when the current stall reaches 7, stalls 8 and 9 will be checked before the cow in stall 7 is fed.

To set the Stall Lag:

Press Reset.

Run subroutine 306 which is the Stall Lag subroutine number. The display will show Lag in the Cow Number window and the existing lag value (if there is one) in the Milk Yield window.

Press the Change key to alter the value. Either one or two underscores will appear in the Milk Yield window.

Key the new lag value. Generally 2 or 3 is sufficient and you may not enter a figure greater than the total stalls in a side. No need to enter leading zeros.

Press Enter and the value is stored.

The Stall Lag facility is invisible inasmuch as it will not change the way you milk your cows or be perceptible during the scanning process. However, it will delay feeding slightly- the higher the lag value the greater the delay.

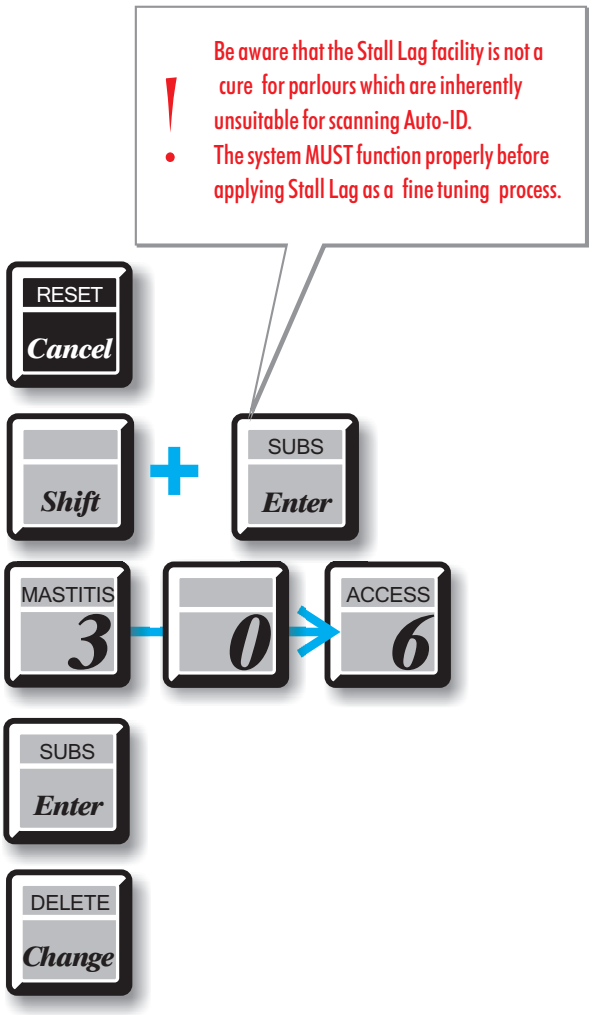

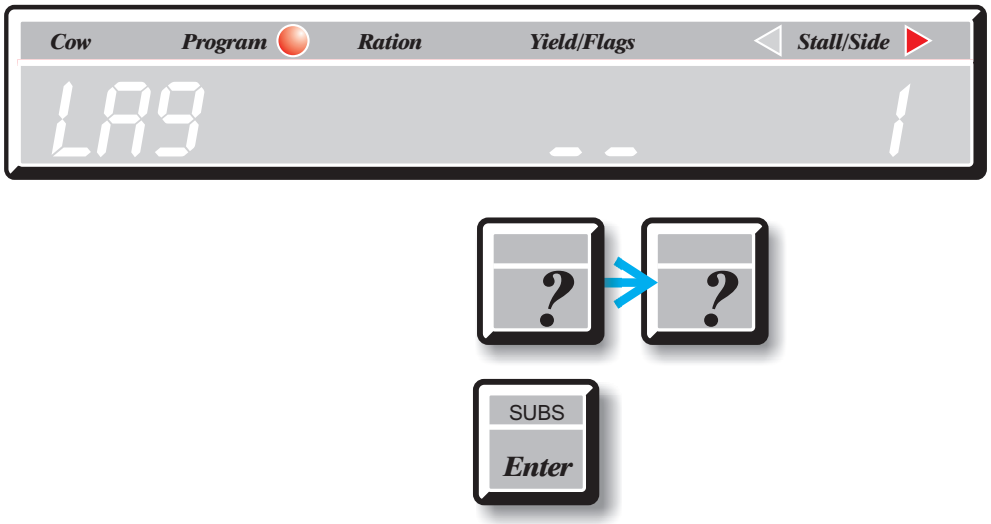

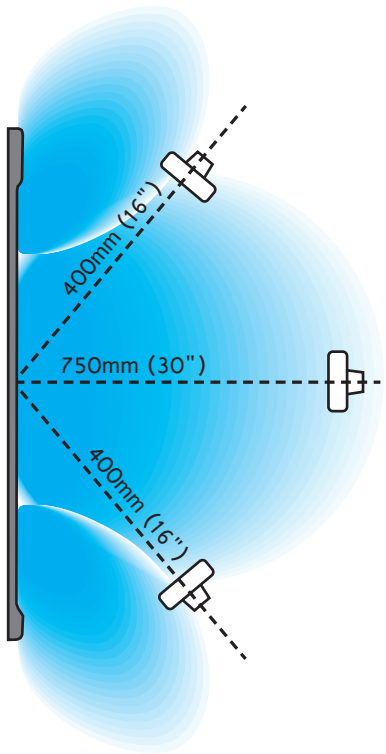

Side view of the antenna.
The magnetic field around the antenna is complex and the reading range will vary depending upon the tag's position within the field. Keep the tag's face toward the antenna.

Testing Antenna Reading

The magnetic field surrounding an antenna is not uniform and will be distorted by metal objects close by. The reading range is further complicated by the ear tag orientation; the best range will be achieved with the tag flat face toward the antenna with a noticeable deterioration if the tag is held edge on. However, this is not a cause for concern since cows seldom, if ever keep their ears stationary for more than a few seconds at a time!

But for the sake of consistent testing, hold the ear tag flat face toward the antenna as shown in the diagram. To test the reading range:

Run Subroutine 305 shown on Page 13.

When measuring the range, use a wooden or plastic lathe marked in cms or inches; do not use a metal rule.

Hold an ear tag with the hole pointing toward the *centre* of the antenna. Move the tag toward the antenna until the beeper sounds then move it away until the beeper ceases. Make a note of the distance.

Use the STEP key to step to the next stall and repeat the process.

When the right hand side is complete, press the SIDE key to change to the left hand side and repeat the process.

Press RESET to exit the subroutine

If any antenna exhibits a significantly shorter read range than the average, or is less than 750mm (30) contact ATL.

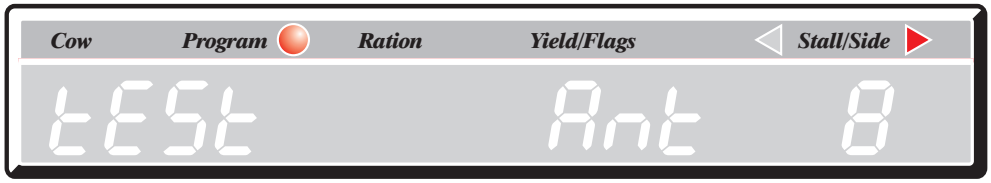

Fault Finding - Variable Speed Drives

Variable speed drives should not affect Auto-ID systems if installed with correct filtering. However if filtering is not installed or incorrectly installed, they can seriously affect, if not totally disable ANY Auto-ID system. Where a drive is connected to the same mains supply as the Auto-ID system, distance between the drive and the Auto-ID system is irrelevant since the interference will be carried within the mains circuit.

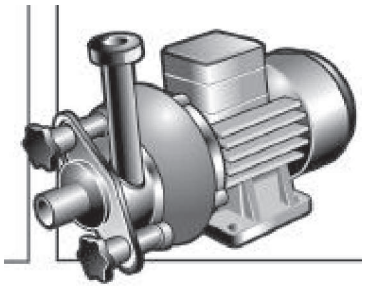

Correct installation includes the fitting of filters to protect other equipment. These may be separate units or they may be incorporated within the control unit itself. Ideally filters will be incorporated between the control and the motor and also in the mains supply to the control.

If the performance of an Auto-ID system deteriorates after a variable speed drive is installed, carry out the following simple checks. The objective is to compare the performance with and without the variable speed drive operating.

1. Switch off the variable speed drive.
2. Check the read range of the antennas. Note this may vary with in-stall antennas between one end of the stalls and the other. Check all the antennas and make notes on performance if necessary. Make note of any significant differences in read range. See Page 15 for testing in stall antennas.
3. Switch the variable speed drive ON.
4. Repeat the checks on all the antennas.
5. If there is a significant difference (i.e. there is a reduction in read range or a complete failure to read tags at a reasonable distance, then the drive should be suspected).
6. Consult the installation engineers or the manufacturer of the drive.
7. Ask if filters have been included.
8. If not then they must be added, if they have, the filter settings may need to be adjusted to make them effective.