Technical Data

400 Series — 404D-22TA

Industrial Open Power Unit — **49.2 kW @ 2800 rev/min**

Basic technical data

Number of cylinders ... 4
Cylinder arrangement ... Vertical in-line
Cycle ... 4
Induction system ... Turbo charged and air charge cooled
Combustion system ... Indirect injection
Compression ratio ... 23·3:1
Bore ... 84 mm (3.3 in)
Stroke ... 100 mm (3.9 in)
Cubic capacity ... 2·216 litres (135.2 in³)
Direction of rotation when viewed from flywheel ... anti-clockwise
Firing order ... 1, 3, 4, 2

Estimated total weight

Dry ... 302 kg (666 lb)
Wet ... 323 kg (712 lb)

Overall dimensions

-height ... 998 mm
-length (from rear of air cleaner to front face of radiator) ... 1050 mm
-width ... 710 mm

Moments of inertia (kgm²)

-engine includes fan pulleys, fan and flywheel:
-Engine rotational components ... 0.444444 kgm²
-crankshaft pulley ... N/A kgm²
-flywheel (option DD002) ... 1.07 kgm²

Centre of gravity dry (engine only)

-forward from rear of block ... 147 mm (5.8 in)
-above block centre line ... 79 mm (3.1 in)
-offset to RHS ... 3 mm (0.1 in)

Performance

Note: All data based on operation to ISO/TR14396 standard reference conditions

Test conditions

-air temperature ... 25 °C (77 °F)
-barometric pressure ... 100 kPa (14.5 lb/in²)
-relative humidity ... 30 %

Sound level

average sound pressure level for bare engine
(without inlet and exhaust) at 1 metre:
-49.2 kW gross @ 2800 rev/min (no fan) ... 85.1 d(B)A
Air inlet restriction at maximum
power (nominal) ... 5.0 kPa (0.7 lb/in²)
Exhaust back pressure at maximum
power (nominal) ... 9.0 kPa (1.3 lb/in²)
Fuel temperature (inlet pump) ... 40 °C (104 °F)
All ratings certified to within ... ± 5%

If the engine is to operate in ambient conditions other than those of the test conditions, suitable adjustments must be made for these changes. For full details, contact Perkins Technical Service Department.

General installation

Designation	Units	Engine speed rev/min
		2800
Gross engine power	kW (bhp)	49.2 (66.0)
Brake mean effective pressure	kPa (lbf/in²)	951.8 (138.0)
Mean piston speed	m/s (ft/s)	9.3 (30.5)
Fan power absorption	kWm (bhp)	3.2 (4.3)
IOPU nett engine power	kW (bhp)	46.0 (61.7)
Engine coolant flow, against a 90 kPa restriction @ rated speed with 1.25:1 pulley ratio	l/min (UK gal/min)	75.8 (16.7)
Combustion air flow	m³/min(ft³/min)	TBA
Exhaust gas flow (maximum)	m³/min (ft³/min)	11.2 (395.5)
Exhaust gas temperature (maximum)	°C (°F)	620 (1148)
Specific Fuel Consumption (SFC) gross	g/kWhr	257
Energy balance		
Energy in fuel (fuel heat of combustion)	kW (bhp)	150.8 (202.2)
Energy to power (gross)	kW (bhp)	49.2 (66.0)
Energy to cooling fan	kW (bhp)	3.2 (4.3)
Energy to power (nett)	kW (bhp)	46.0 (61.7)
Energy to coolant and lubricating oil	kW (bhp)	47.4 (63.6)
Energy to exhaust	kW (bhp)	39.8 (53.4)
Energy to charge cooler	kW (bhp)	2.6 (3.5)
Energy to radiation	kW (bhp)	11.8 (15.8)

Caution: *The airflows shown in this table will provide acceptable cooling for an open power unit operating in ambient temperatures of up to 53 °C (46 °C if a canopy is fitted with an airflow restriction of up to 0,125 kPa). If the power unit is to be enclosed totally, a cooling test must be done to check that the engine cooling is acceptable. If there is insufficient cooling, contact your Perkins Distributor or Perkins Technical Service Department.*

404D-22TA IOPU - left hand side view

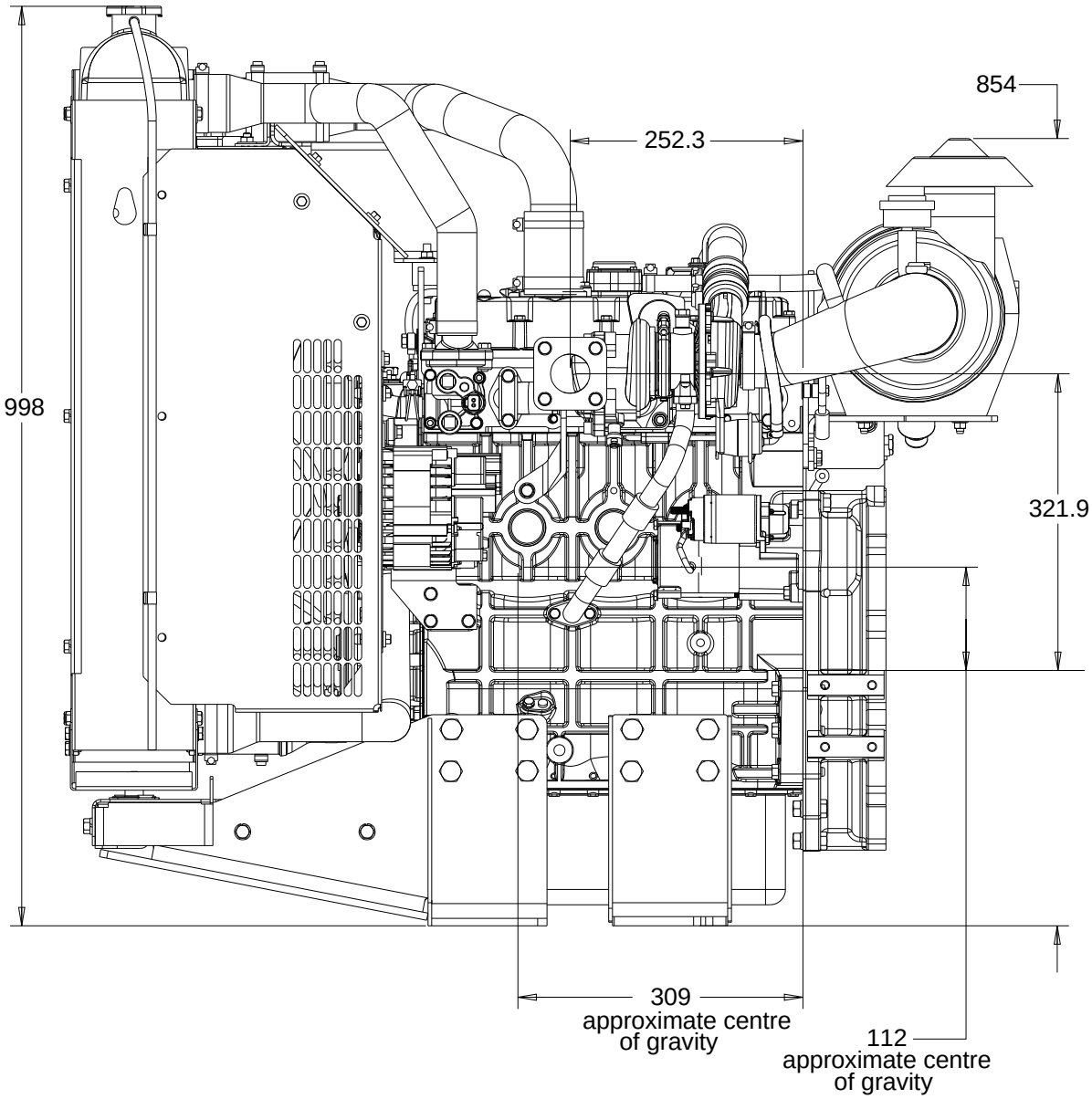

404D-22TA IOPU - right hand side view

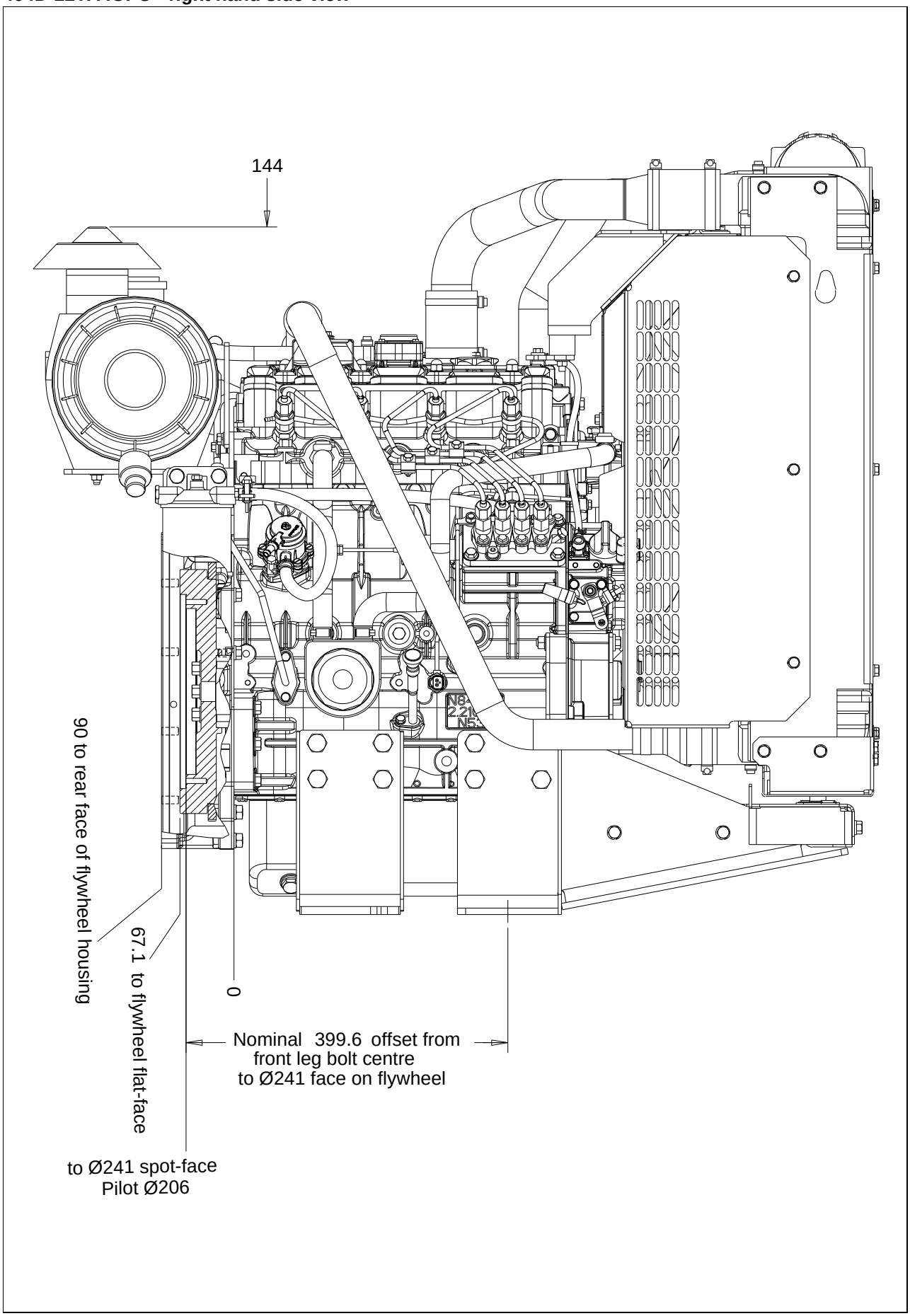

404D-22TA IOPU - rear view

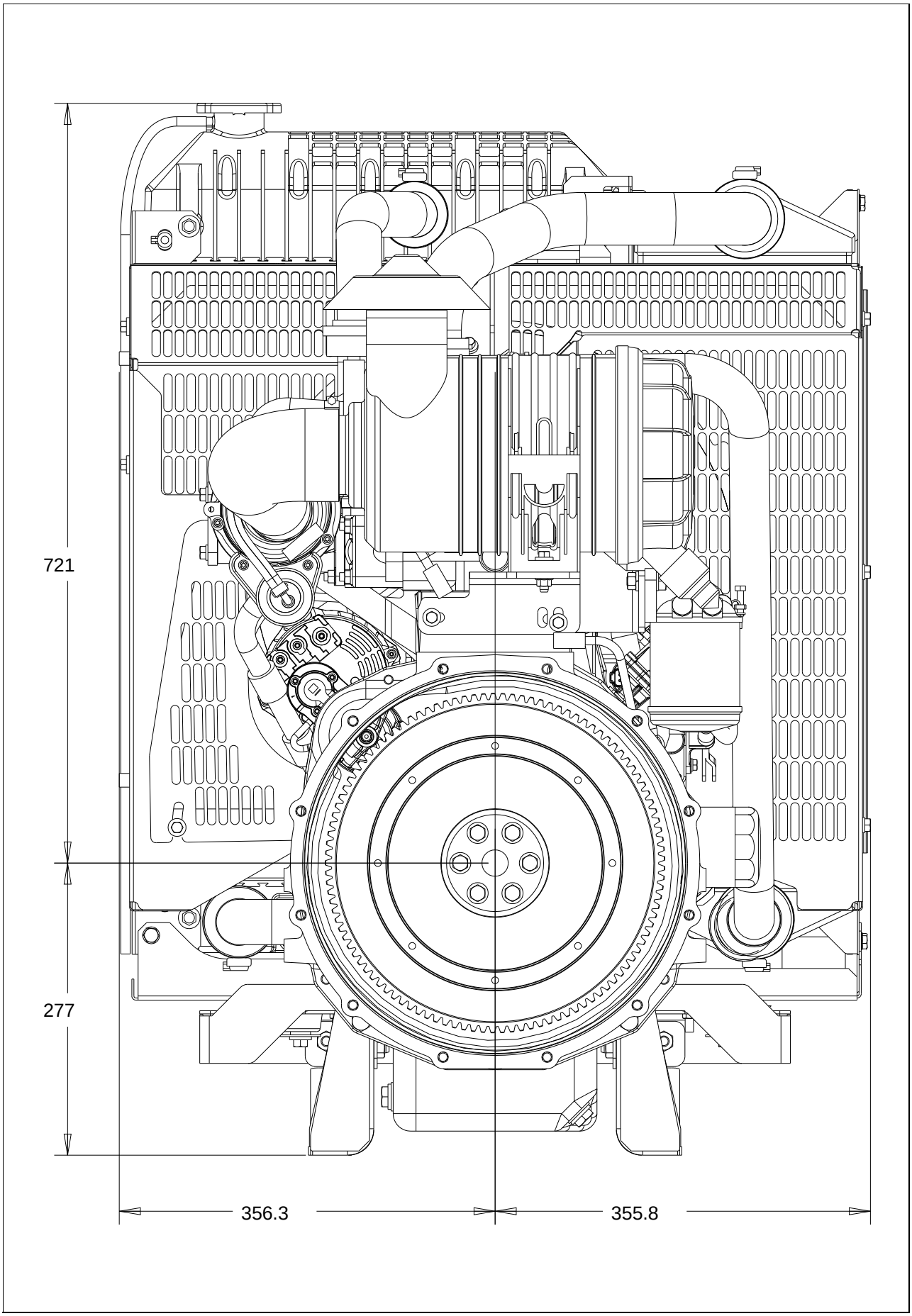

404D-22TA IOPU - plan view

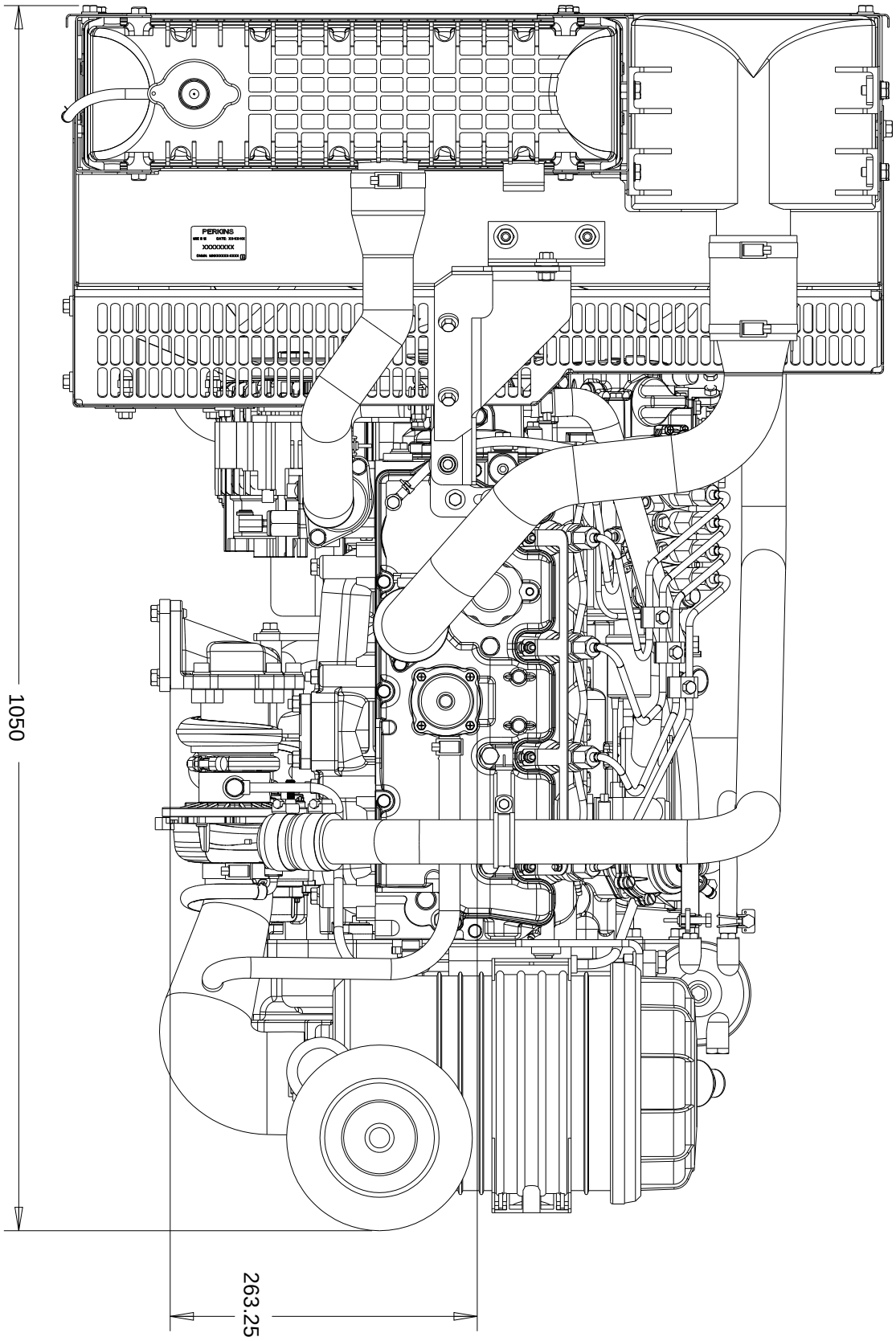

404D-22TA IOPU - view from below

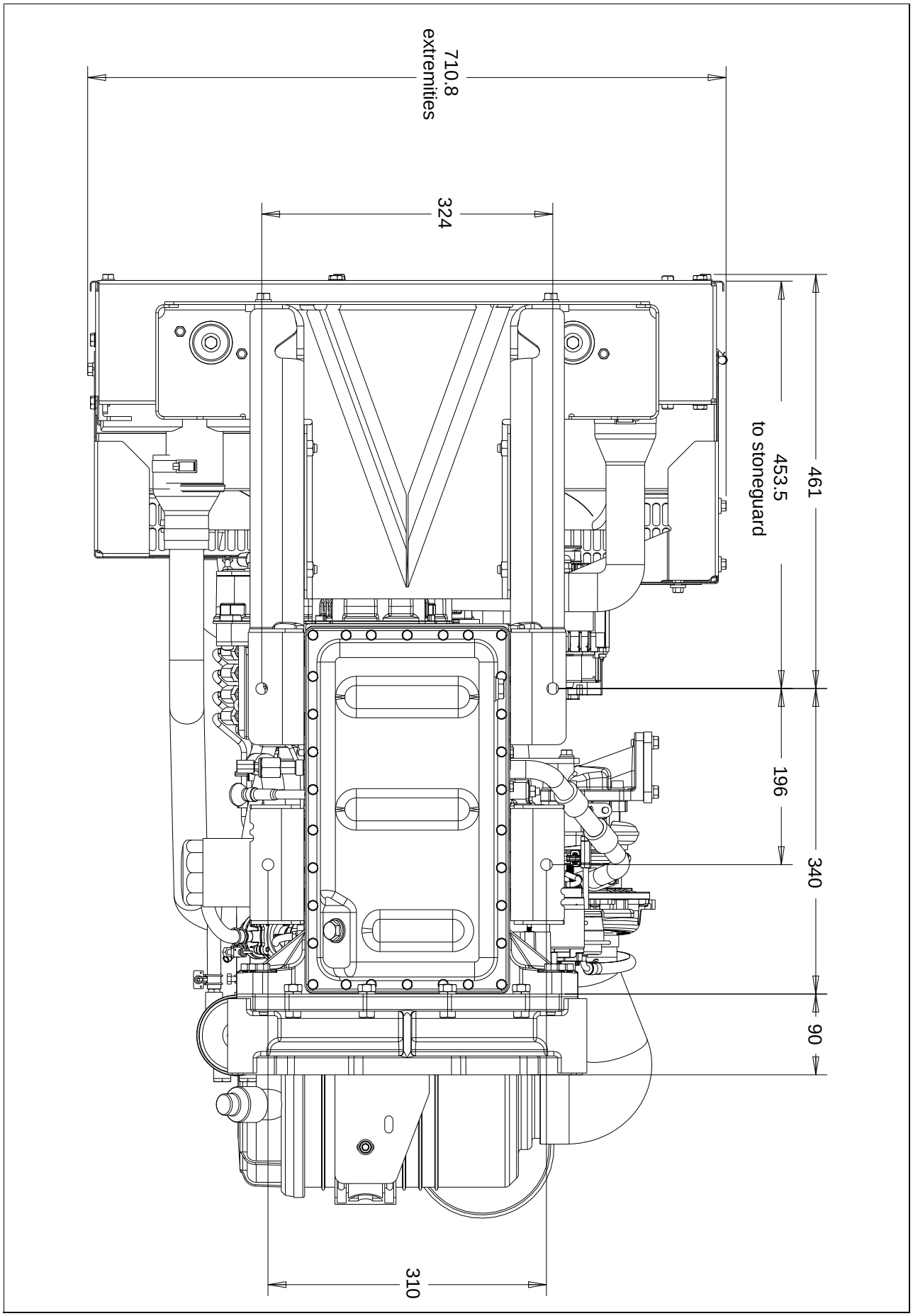

Cooling system

Radiator

-face area... ... ... 0·250 m² (2.690 ft²)
-rows and materials ... ... 5 rows, Aluminium
-matrix density and material... ... ...
... ... 38 tubes per row, 10 fins per inch, Aluminium
-height of matrix . ... 570.0 mm (22.4 in)
-width of matrix... ... ... 438.8 mm (17.3 in)
-pressure cap setting . ... 110 kPa (16.0 lb/in²)

Charge cooler

-face area... ... ...0·1 m²
-number of rows and materials .. ..2 rows, Aluminium
-matrix density and material... ... ...
... ... 9 rows, 5.5 fins per inch, Aluminium
-height of matrix . ... 550.0 mm (21.6 in)
-width of matrix... ... ... 191.1 mm (7.5 in)

Fan

-diameter ... ... 457 mm (18 in)
-drive ratio .. .. 1·25:1
-number of blades 7
-material . ... plastic
-type ... ... puller
Airflow at rated speed ... ... 67.8 m³/min
Airflow at maximumtorque speed... ... ... 39.9 m³/min
Power absorbed @ maximum rated speed ... ... 3.2 kW

Coolant

Recommended coolant: BS6580 - 1992, ASTM D3306 and Perkins ELC coolants to 1E1966
Total system capacity
-with radiator .. .. 11.7 litres (20.6 pt)
-without radiator . ... 3.6 litres (6.3 pt)
Maximum permissible external
system resistance .. .. TBA kPa
Maximum top tank temperature . ... 110 °C (230 °F)
Thermostat rise across engine... ... ... TBA °C (°F)
Thermostat operation range... ... ... .82 - 95 °C (180 - 203 °F)
Coolant pump drive type and ratio
... ... Centrifugal, belt driven, 1·25:1
Maximum static pressure head on water pump . ... 30.4 kPa

Electrical system

Voltage... ... ... 12 V, negative ground
Alternator output ... ... 65 amps
Starter motor power ... ... 2.0 kW
Number of teeth on flywheel 126
Number of teeth on pinion.. 9
Minimum cranking speed... ... ... 150 rev/min
Starter solenoid pull-in current .. .. N/A amps
Starter solenoid hold-in current . ... N/A amps
Engine stop method... ... ... Electric shut off solenoid
Note: For further information on the electrical system, refer to the Application and Installation Manual.

Cold start recommendations

Temperature Range	5 to -7 °C	-7 to -10 °C	-7 to -15 °C	-15 to -20 °C
Oil	20W	20W	20W	5W
Starter	2kW	2kW	2kW	2kW
Battery	647	647	647	655
Max breakaway current	TBA	TBA	TBA	TBA
Cranking current	TBA	TBA	TBA	TBA
Aids	Glow-plugs	Glow-plugs	Glow-plugs	Glow-plugs
Minimum mean cranking speed	180 rev/min	180 rev/min	180 rev/min	180 rev/min

Notes:

- Battery capacity is defined by the 20 hour rate
- If a change to a low viscosity oil is made, the cranking torque necessary at low ambient temperatures is much reduced. The starting equipment has been selected to take advantage of this. It is important to change to the appropriate multigrade oil in anticipation of operating in low ambient temperatures
- Breakaway current is dependent on battery capacity available. Cables should be capable of handling the transient current which may be up to double the steady cranking current.

Exhaust system

Maximum back pressure for total system ... ... 10.2 kPa (1.5 lb/in²)
Inside diameter of outlet flange ... ... 42 mm (1.65 in)

Fuel system

Type of:
-injection ... ... Indirect
-fuel injection pump ... ... cassette type
-fuel atomiser ... ... pintle nozzle
Nozzle opening pressure ... ... 14.7 MPa (2132 lbf/in²)
Priming pump ... ... Manual

Fuel lift pump

Type of fuel lift pump. ... ... Mechanical driven by camshaft
Maximum fuel supply
restriction at lift pump outlet .. .. .16.9 kPa (2.5 lbf/in²)
-flow/hour .. .. 1.05 litres/min (1.85 pints/min)
-pressure ... ...10 kPa (1.45 lbf/in²)
Maximum suction head at pump inlet ... ... 1.5 m
Maximum static pressure head . ... 3.0 m
Governor type ... ... Mechanical
Maximum fuel filter service interval ... ... 1000 hours

Fuel specification

BS2869 Class 2 (off highway, gas oil); DIN EN590 DERV (Class A to F and 0 to 4)

Density . ... 0.840 - 0.865 (kg/l @ 15 °C)
Viscosity ... ... 2.0 - 3.2 (mm²/s @ 40 °C)
Sulphur content ... ... 0.0007 - 0.0015 (% mass)
Cetane No. ... ... 40 - 0

Fuel consumption (typical)

2800 rev/min @ 100% power ... ... 15 litres/hour

Induction system

Maximum air intake restriction

-clean filter. ... ... .3.0 kPa
-dirty filter .. .. .8.0 kPa
-air filter type . ... dry element type

Lubrication system

Lubricating oil capacity

-maximum ... ... 10.6 litres (18.7 pt)
-minimum ... ... 8.9 litres (15.7 pt)
Maximum engine operating angles -
front up, front down, right side, left side . ... TBA°
Sump drain plug tapping size M16
Shutdown switch:
-pressure setting (when fitted) 29.4 to 68.6 kPa (4.26 to 9.95 lbf/in²)
Lubricating oil flow .. .. 20.4 litres/min (4.5 gal/min)

Lubricating oil pressure

-relief valve opens .. .. 304 - 500 kPa (44 - 72 lbf/in²)
-at maximum no-load speed ... ... 196 - 392 kPa (28 - 57 lbf/in²)
-at rated no-load speed .. .. 120 - 392 kPa (17 - 57 lbf/in²)
-at minimum speed. ... ... 49 kPa (7.1 lbf/in²)
Maximum oil temperature
-continuous operation. ... ...125 °C (257 °F)
-intermittent operation ... ...135 °C (275 °F)
Oil pump speed and
drive method ... . Gerotor (gear driven off crankshaft), 1490 rev/min
Oil consumption at full load rated speed ... ... >0.2%

Normal operating angles

Front and rear. ... ... 35°
Side ... ... 35°

Recommended SAE viscosity

A multi grade lubricating oil which conforms to API CH4 or ACEA E5 must be used, see illustration below:

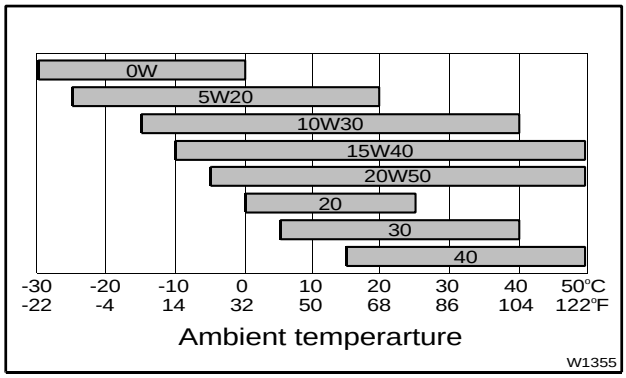

Note: For additional notes on lubricating oil specifications, refer to the Operation and Maintenance Manual

Mountings

Maximum static bending moment at
rear face of block ... ... TBA Nm (lbf ft)

Torque capability

Continuous . ... 75.3 Nm
Intermittent . ... 89.7 Nm

Perkins Engines Company Limited
Peterborough PE1 5NA United Kingdom
Telephone +44 (0) 1733 583000
Fax +44 (0) 1733 582240
www.perkins.com

Distributed by

Publication No. TPD1730E, Issue 1.