REV.	ECN Number	Description	Drawn
1	CS21060039	初版发行	2021/06/10

100PIN:BB41-AOJT-1B-XHR

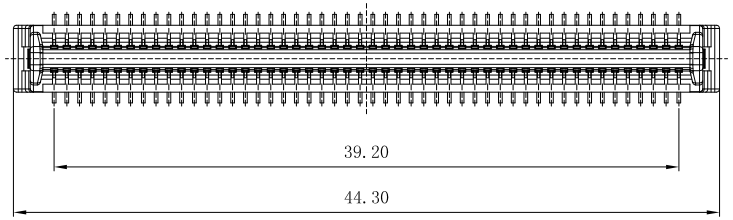

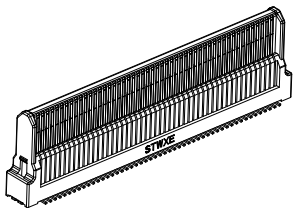

3D VIWE
(With out cover)

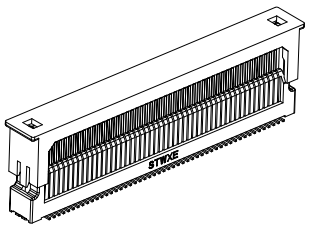

3D VIWE
(With cover)

备注：
1. 塑胶材料：LCP，黑色，防火等级：UL 94v-0
2. 端子材料：铜合金
3. 额定电压：50V AC/DC for 1 minute
4. 接触阻抗：50mΩmax. initial(不包括导体阻抗)
5. 耐电压：500V AC for 1 minute
6. 绝缘阻抗：100MΩ min.
7. 额定电流：0.5A
8. 寿命：30次 min
9. 插入力：150gf max./pin,拔出力：8.5gf min./pin
10. 保持力：250gf最小/pin
11. 有害物质需符合Rohs2.0标准。
12. 尺寸符合ANSI Y14.5M-1994。

料号说明:
BB41-XXJT-1B-XHR
- G:公母合高13.75mm-14.75mm
- Pin数

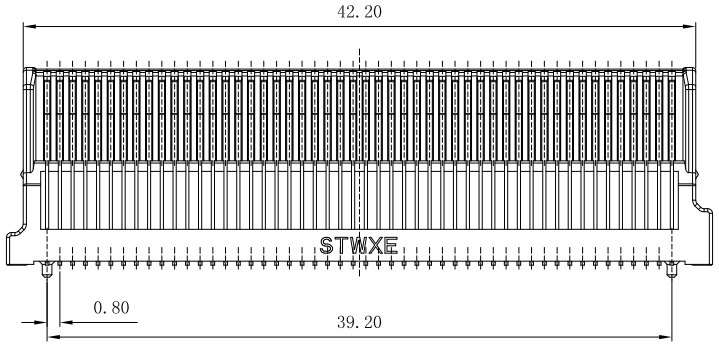

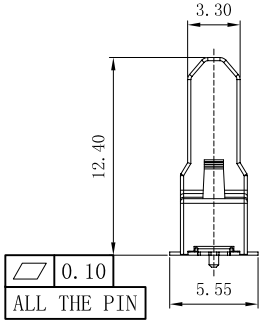

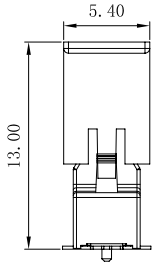

(With cover)

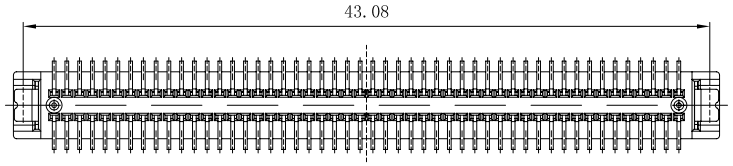

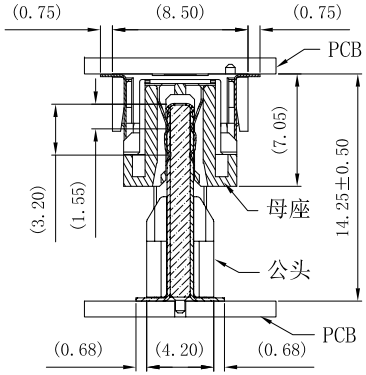

(公母合高)

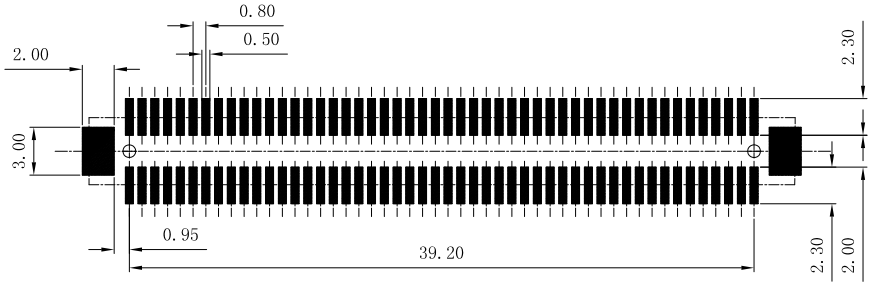

RECOMMENDED PCB LAYOUT
TOLERANCE:±0.05mm

X方向浮动量：±0.5
Y方向浮动量：±0.5
Z方向浮动量：±0.5

INNOCOSO Ltd	TOLERANCE UNLESS OTHERWISE SPECIFIED	SCALE 1:1	ORIGINAL DRAWN: Qinghua Fu	DATE 2021/06/10	DWG.NO. 600-0000-0575	TITLE 0.80mm Pitch 浮动BTB 客户图	REV. 1
	X.X ±0.35 / X.° ±5°	UNIT mm	CHECK: Guangyu Guo	DATE 2021/06/10	PARTS NO.(INTENDED USE) BB41-XXJT-1B-XHR		SHEET 1/2
	X.XX ±0.20 / X.X° ±3°	SIZE A4	APPROVE: Ady Zhou	DATE 2021/06/10			
	X.XXX / X.XX° ±2°						

40PIN: BB41-40JT-1B-XHR

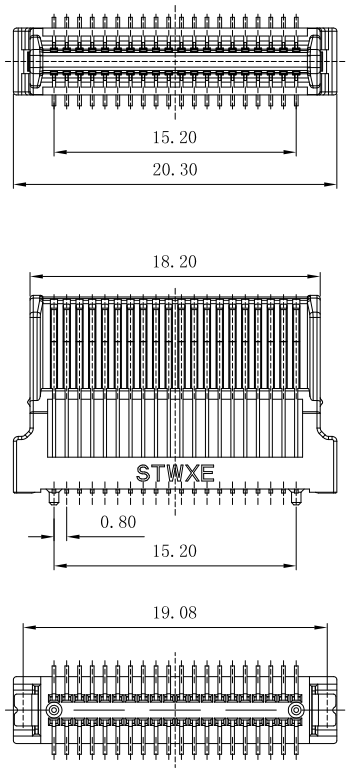

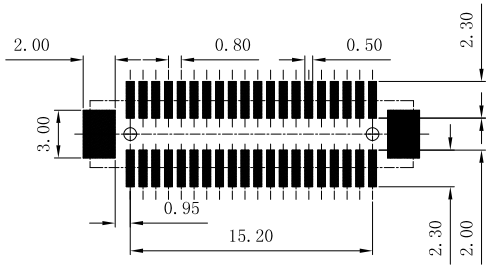

RECOMMENDED PCB LAYOUT
TOLERANCE:±0.05mm

60PIN: BB41-60JT-1B-XHR

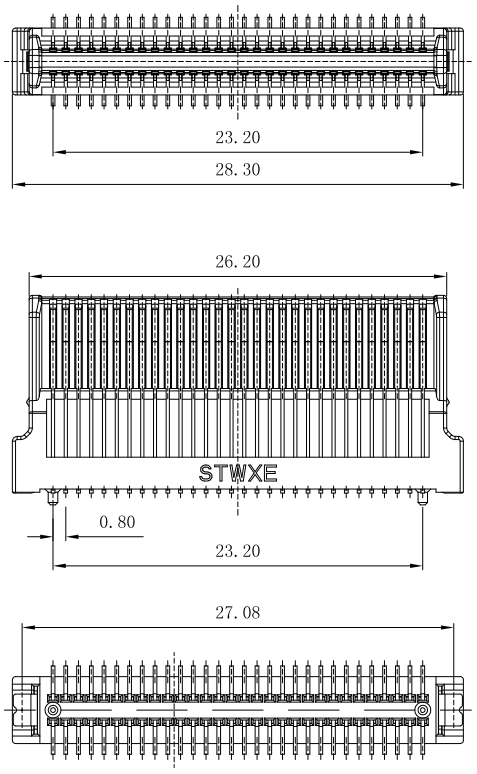

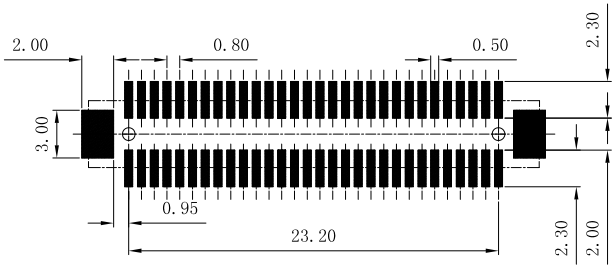

RECOMMENDED PCB LAYOUT
TOLERANCE:±0.05mm

80PIN: BB41-80JT-1B-XHR

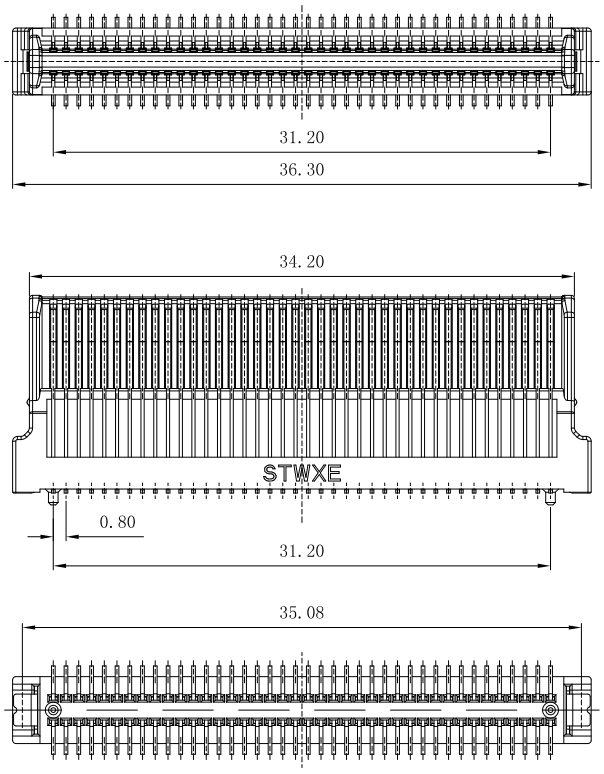

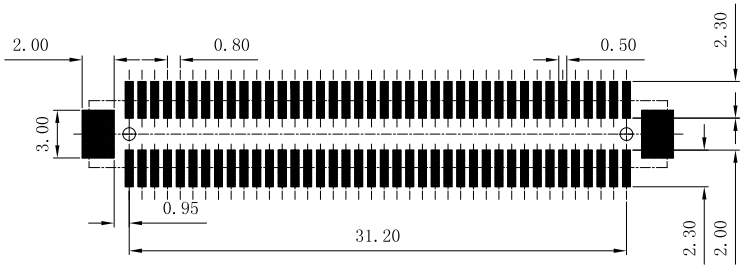

RECOMMENDED PCB LAYOUT
TOLERANCE:±0.05mm

INNOCOSO Ltd	TOLERANCE UNLESS OTHERWISE SPECIFIED			SCALE 1:1	ORIGINAL DRAWN: Qinghua Fu	DATE 2021/06/10	DWG. NO. 600-0000-0575
	X.X	±0.35	X.°	±5°	UNIT mm	CHECK: Guangyu Guo	DATE 2021/06/10	PARTS NO. (INTENDED USE) BB41-XXJT-1B-XHR
	X.XX	±0.20	X.X°	±3°	SIZE A4	APPROVE: Ady Zhou	DATE 2021/06/10	
	X.XXX		X.XX°	±2°				

TITLE: 0.80mm Pitch 浮动BTB 客户图

REV. 1

SHEET 2/2