LESSMANN®
THE GERMAN BRUSH COMPANY

STRIP BRUSHES

OF OUR BRAND ROBERT THALER

en

QUALITY MADE IN GERMANY

Table of contents

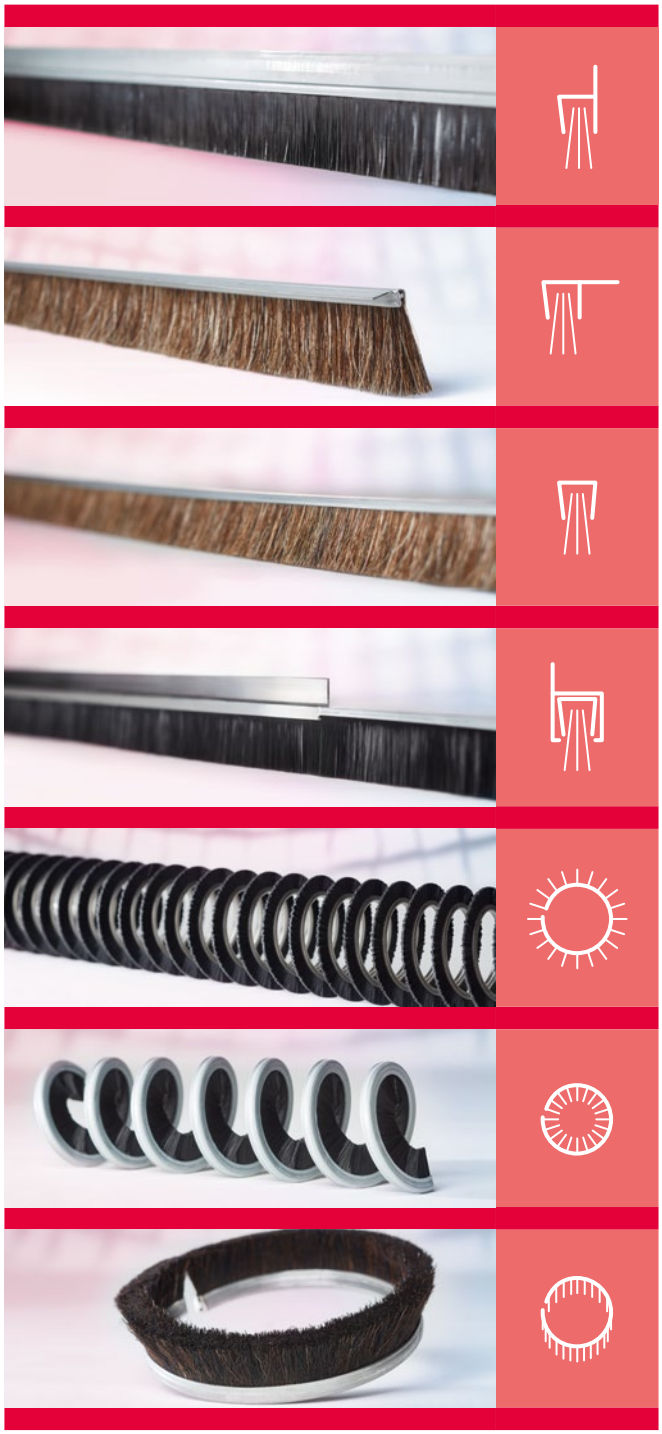

4 Product and material know-how

6 Sealing brushes straight fittings

8 Sealing brushes angled fittings

10 Strip brushes for slots / profiles

12 Strip brushes in aluminum profile

14 Shaped strip brushes, filling facing outwards

15 Shaped strip brushes, filling facing inwards

16 Cup shaped strip brushes

17 Inquiry for strip brushes

19 General conditions of sale and delivery

LESSMANN®
THE GERMAN BRUSH COMPANY

Future-oriented Investment

ROBERT THALER RT
EINE MARKE VON LESSMANN®

In April of the year 2019, Lessmann took over the company Robert Thaler in Solingen, whereby the the range of strip brushes could be greatly expanded.

By taking over all the employees and their long-standing know-how as well as the plants and machinery of Robert Thaler, Lessmann now offers an extended product range of high-quality strip brushes „Made in Germany".

Highest and constant product quality as well as a wide variety of in-house products and delivery times tailored to the customer are now also guaranteed in this product category.

You will find an overview of the articles as well as an inquiry form for the strip brushes on the following pages.

For more information and an overview of our extensive other product range including wheel brushes, deburring brushes, shank brushes, interior brushes, industrial brushes, cup brushes, cone brushes, hand brushes and brooms, please visit:
www.lessmann.com

Quality, fairness, reliability, sustainability

To do the right things to the right time: the success of our company nowadays is based on contributions and entrepreneurial decisions in the past.

Today, we, as a family enterprise in the third generation, are facing new customer demands and market statues, react flexible and work efficient, to gear our company up for the future!

Quality, Fairness and Reliability are the most important values in the relation to our customers and partners, since Johann LESSMANN and its children Edgar and Traudel founded a small brush factory in Oettingen. Sustainable management has also been firmly anchored in our corporate culture for years.

Strict quality management, uncompromising customer orientation and decades of experience make up the foundation of our success. One of the most important strengths are our 240 qualified and motivated employees, who are willing to get into new challenges, react flexible and to bring in their knowledge and competence. That's how we work together to have a mutual success.

Made in Germany

Quality made in Germany. For LESSMANN that does not only mean, that all our products are manufactured in Bavaria and North Rhine-Westphalia, but also a huge part of all raw materials as filament, wood, metal or plastics are purchased from renowned suppliers in Germany.

We manufacture almost all products in a broad standard program on our own. That's why already the quality of the raw materials has a significant role.
Intensive test of the materials and inspections during production, build up two important values of the reliable LESSMANN-quality.

The headquarters in Germany requesting us to be the pioneer when using modern technology and automation.

Thus our customers can receive the best quality at competitive prices.

Product and material know-how

Strip brushes
Strip brushes can be used in many ways. Strip brushes have very dense and close filling and thus they can help to save energy with long lifetime.

They seal gates and doors and prevent of infiltration, cold, humidity, leaves and dirt. They also protect moving parts (installation in machines and systems) from dust and other undesirable particles. Strip brushes also can be used for transport, guiding and securing of sensitive objects. Strip brushes from Lessmann are available in different shapes and with different adapters and filling materials.

Filling materials
All LESSMANN strip brushes are available with the following filling materials:

Natural hair:
Horse hair, grey and black

Highly effective and the most used material of filling for sealing gates and both hinged doors and sliding doors. This type of filling can be used in wet and dry areas and even at high temperatures (up to 150 °C). Their static charge is low. As standard, we use a mixture of 70 % horsehair and 30 % polyethylene.

The color specification „grey" (top) refers to light horsehair, „black" (bottom) refers to dark horsehair. However, since it is a natural material, color variations may occur.

Synthetic filaments:

- Polypropylene PP,
  Ø 0,15 – 3 mm, white and black.

Inexpensive bristle for many uses, does not absorb water, retains initial stiffness in wet use, low bend recovery.

- Polyamide PA,
  Ø 0,08 – 3 mm, white and black.
  Available in all grades. Good heat and wear resistance, good bend recovery.
  PA 6.6: Good bend recovery, good abrasion resistance, water absorption up to max. 10 %.
  PA 6.12 (ideally suited for use in wet environments): Flexible and excellent bend recovery, high abrasion resistance, water absorption up to max. 3 %.

- Polyester (PBT),
  Ø 0,08 – 3 mm, black, white, transparent.
  Lower water absorption than PA 6.12, very good bend recovery, good chemical resistance.

Wires:

- Steel wire

Good mechanical properties, good wear behavior, temperature resistance (up to approx. 300 °C). Suitable for deburring, derusting, roughening and paint removal.

- Stainless steel wire

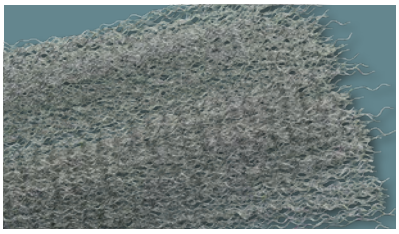

Usable in high-temperature range (up to approx. 400 °C), corrosion-resistant.

- Brass wire

Softer, therefore very suitable for working on sensitive wood and metal surfaces, temperature resistant (up to approx. 200 °C).

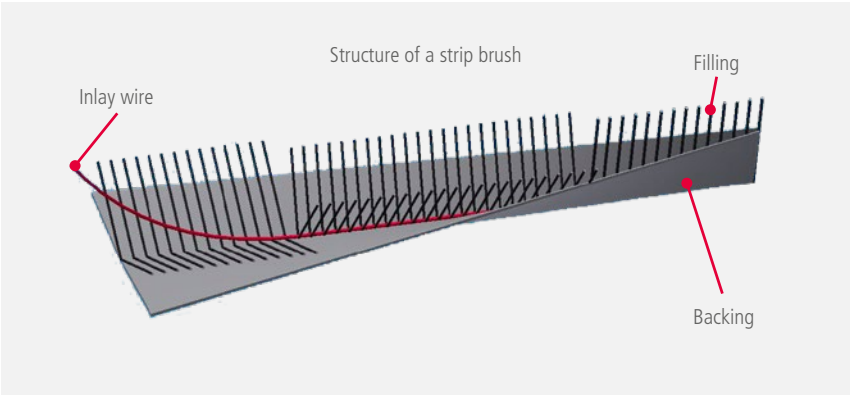

Standard backing
The filling materials of strip brushes will be bound in a U-shaped metal strip.

We offer following backings:
- Zinc-plated steel plate

- Stainless steel plate

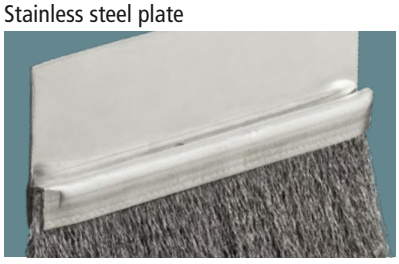

- Brass strip (only for selected brush types, please inquire)

- Other backing materials available on request.

Profiles
In general, we supply our strip brushes in holding profiles made of high-quality, untreated aluminum, both type „h" / A and type „F" / AG.

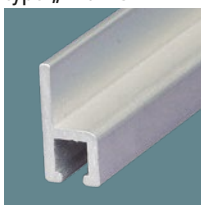
h Profile / Type A

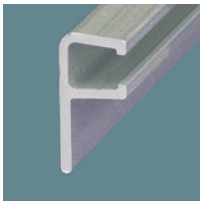
F Profile / Type AG

On request, the profiles are also available with anodizing and colored coatings:
- Silver (C-0)

- Bronze (C-34)

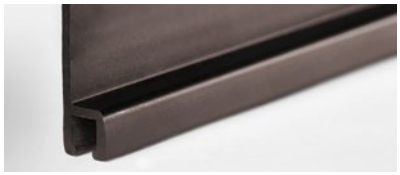

- Black (C-35)

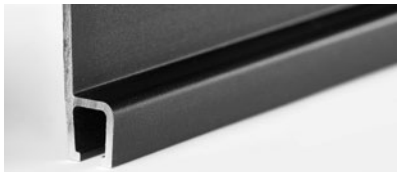

- Powder coated profiles in different colours

Other natural hair, bristles, fibers, plant fibers, plastic bristles and wires in different variants available on request.

The length of profiles and brushes is limited to max. 5000 mm due to shipping restrictions.

Ordering information
For all strip brushes, please **always indicate in addition** to the article number
- the desired trim height (BH)
- the total length (GL)

We will automatically select the optimum filament diameter for you based on the fill height.
The given article numbers always refer to a brush without a frame coating.
For all other versions, please use the inquiry form on pages 17/18.

You can also find our request forms in the respective category at: www.lessmann.com/en/Products

Sealing brushes straight fittings

Sealing brushes straight						ROS grey		ROS black		PA 6.6 black		
Type	RB	SH	FH	BH	GH	Backing STV	Backing ROF	Backing STV	Backing ROF	Backing STV	Backing ROF	Filament Ø
	mm	mm	mm	mm	mm	Art. No.	Art. No.	Art. No.	Art. No.	Art. No.	Art. No.	mm
FH 17	6	7	17	8 – 19	max. 36	*220.353.10*	*230.453.10*	*220.353.00*	*230.453.00*	*220.323.00*	*230.423.00*	0,15
				20 – 39	max. 56					*220.326.00*	*230.426.00*	0,25
				40 – 79	max. 96					*220.329.00*	*230.429.00*	0,40
				80 – 100	max. 117					*220.32E.00*	*230.42E.00*	0,60
FH 22	6	7	22	8 – 19	max. 41	*221.353.10*	*231.453.10*	*221.353.00*	*231.453.00*	*221.323.00*	*231.423.00*	0,15
				20 – 39	max. 61					*221.326.00*	*231.426.00*	0,25
				40 – 79	max. 101					*221.329.00*	*231.429.00*	0,40
				80 – 100	max. 122					*221.32E.00*	*231.42E.00*	0,60
FH 25	6	7	25	8 – 19	max. 44	*222.353.10*	*232.453.10*	*222.353.00*	*232.453.00*	*222.323.00*	*232.423.00*	0,15
				20 – 39	max. 64					*222.326.00*	*232.426.00*	0,25
				40 – 79	max. 104					*222.329.00*	*232.429.00*	0,40
				80 – 100	max. 125					*222.32E.00*	*232.42E.00*	0,60
FH 30	6	7	30	8 – 19	max. 49	*223.353.10*	*233.453.10*	*223.353.00*	*233.453.00*	*223.323.00*	*233.423.00*	0,15
				20 – 39	max. 69					*223.326.00*	*233.426.00*	0,25
				40 – 79	max. 109					*223.329.00*	*233.429.00*	0,40
				80 – 100	max. 130					*223.32E.00*	*233.42E.00*	0,60
FH 40	6	7	40	8 – 19	max. 59	*224.353.10*	*234.453.10*	*224.353.00*	*234.453.00*	*224.323.00*	*234.423.00*	0,15
				20 – 39	max. 79					*224.326.00*	*234.426.00*	0,25
				40 – 79	max. 119					*224.329.00*	*234.429.00*	0,40
				80 – 100	max. 140					*224.32E.00*	*234.42E.00*	0,60
FH 40/D	9	10	40	30 – 99	max. 139	*225.553.10*	*235.653.10*	*225.553.00*	*235.653.00*	*225.529.00*	*235.629.00*	0,40
				100 – 149	max. 189					*225.52E.00*	*235.62E.00*	0,60
				150 – 300	max. 340					*225.52J.00*	*235.62J.00*	0,80
				301 – 500	max. 540	–	–	–	–	*on demand**	*on demand**	–
FH 50/D	9	10	50	30 – 99	max. 149	*226.553.10*	*236.653.10*	*226.553.00*	*236.653.00*	*226.529.00*	*236.629.00*	0,40
				100 – 149	max. 199					*226.52E.00*	*236.62E.00*	0,60
				150 – 300	max. 350					*226.52J.00*	*236.62J.00*	0,80
				301 – 500	max. 540	–	–	–	–	*on demand**	*on demand**	–

* additional over-shearing of the bristles possible on request.

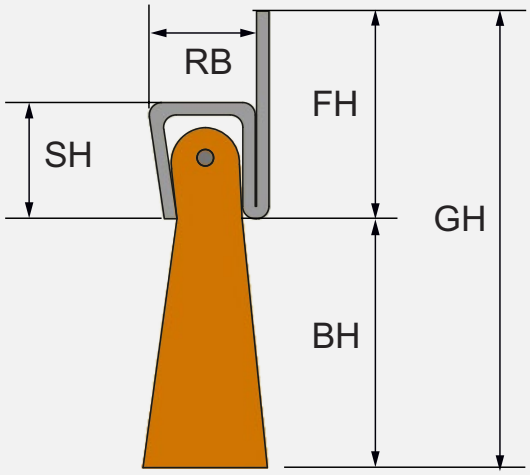

Ordering information
For all strip brushes, please **always indicate in addition** to the article number
- the desired trim height (BH)
- the total length (GL)

We will automatically select the optimum filament diameter for you based on the fill height.
The given article numbers always refer to a brush without a frame coating.
For all other versions, please use the inquiry form on page 17.

For *items printed in italics* consider our minimum order value (see page 19).

PA	= Polyamide
ROS	= Horse hair (mixed with 30% Polyethylene)
STV	= Zinc-plated steel
ROF	= Stainless steel

Sealing brushes straight
We offer sealing brushes in different sizes as well as different backing width and length of the legs. The sealing brushes can be mounted directly. Depending on the brush application we offer different filling materials.

On request we can produce the profiles with perforation or/and notches at the profile legs.

The brushes type „FH 40/D" and „FH 50/D" are produced with a thicker metal sheet and are therefore much more stable and resistant than the standard types.

Sealing brushes angled fittings

Sealing brushes angled						ROS grey		ROS black		PA 6.6 black		
Type	RB	SH	FH	BH	GH	Backing STV	Backing ROF	Backing STV	Backing ROF	Backing STV	Backing ROF	Filament Ø
	mm	mm	mm	mm	mm	Art. No.	Art. No.	Art. No.	Art. No.	Art. No.	Art. No.	mm
SL 16	6	7	16	8–19	max. 26	*240.353.10*	*250.453.10*	*240.353.00*	*250.453.00*	*240.323.00*	*250.423.00*	0,15
				20–39	max. 46					*240.326.00*	*250.426.00*	0,25
				40–79	max. 86					*240.329.00*	*250.429.00*	0,40
				80–100	max. 107					*240.32E.00*	*250.42E.00*	0,60
SL 21	6	7	21	8–19	max. 26	*241.353.10*	*251.453.10*	*241.353.00*	*251.453.00*	*241.323.00*	*251.423.00*	0,15
				20–39	max. 46					*241.326.00*	*251.426.00*	0,25
				40–79	max. 86					*241.329.00*	*251.429.00*	0,40
				80–100	max. 107					*241.32E.00*	*251.42E.00*	0,60
SL 24	6	7	24	8–19	max. 26	*242.353.10*	*252.453.10*	*242.353.00*	*252.453.00*	*242.323.00*	*252.423.00*	0,15
				20–39	max. 46					*242.326.00*	*252.426.00*	0,25
				40–79	max. 86					*242.329.00*	*252.429.00*	0,40
				80–100	max. 107					*242.32E.00*	*252.42E.00*	0,60
SL 29	6	7	29	8–19	max. 26	*243.353.10*	*253.453.10*	*243.353.00*	*253.453.00*	*243.323.00*	*253.423.00*	0,15
				20–39	max. 46					*243.326.00*	*253.426.00*	0,25
				40–79	max. 86					*243.329.00*	*253.429.00*	0,40
				80–100	max. 107					*243.32E.00*	*253.42E.00*	0,60
SL 39	6	7	39	8–19	max. 26	*244.353.10*	*254.453.10*	*244.353.00*	*254.453.00*	*244.323.00*	*254.423.00*	0,15
				20–39	max. 46					*244.326.00*	*254.426.00*	0,25
				40–79	max. 86					*244.329.00*	*254.429.00*	0,40
				80–100	max. 107					*244.32E.00*	*254.42E.00*	0,60
SL 39/D	9	10	39	30–99	max. 106	*245.553.10*	*255.653.10*	*245.553.00*	*255.653.00*	*245.529.00*	*255.629.00*	0,40
				100–149	max. 156					*245.52E.00*	*255.62E.00*	0,60
				150–300	max. 307					*245.52J.00*	*255.62J.00*	0,80
				301–500	max. 510	–	–	–	–	*on demand**	*on demand**	–
SL 49/D	9	10	49	30–99	max. 106	*246.553.10*	*256.653.10*	*246.553.00*	*256.653.00*	*246.529.00*	*256.629.00*	0,40
				100–149	max. 156					*246.52E.00*	*256.62E.00*	0,60
				150–300	max. 307					*246.52J.00*	*256.62J.00*	0,80
				301–500	max. 510	–	–	–	–	*on demand**	*on demand**	–

* additional over-shearing of the bristles possible on request.

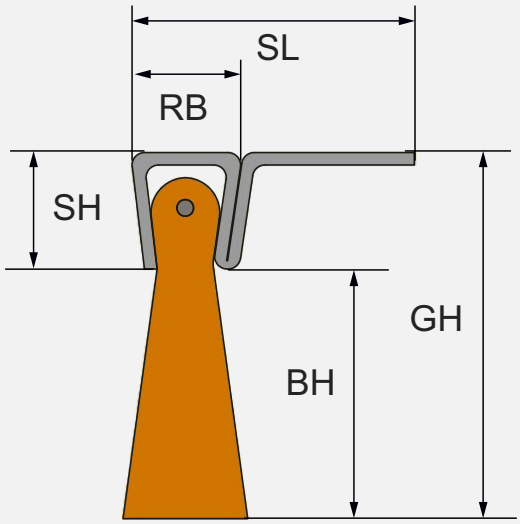

Sealing brushes angled
We offer sealing brushes in different sizes as well as different backing width and length of the legs. The sealing brushes can be mounted directly. Depending on the brush application we offer different filling materials.

On request we can produce the profiles with perforation or/and notches at the profile legs.

The brushes type „SL 39/D" and „SL 49/D" are produced with a thicker metal sheet and are therefore much more stable and resistant than the standard types.

Ordering information
For all strip brushes, please **always indicate in addition** to the article number
- the desired trim height (BH)
- the total length (GL)

We will automatically select the optimum filament diameter for you based on the fill height.
The given article numbers always refer to a brush without a frame coating.
For all other versions, please use the inquiry form on page 17.

For *items printed in italics* consider our minimum order value (see page 19).

PA	= Polyamide
ROS	= Horse hair (mixed with 30% Polyethylene)
STV	= Zinc-plated steel
ROF	= Stainless steel

Strip brushes for slots / profiles

Strip brushes for slots / profiles					ROS grey		ROS black		PA 6.6 black		
Type	RB	SH	BH	GH	Backing STV	Backing ROF	Backing STV	Backing ROF	Backing STV	Backing ROF	Filament Ø
	mm	mm	mm	mm	Art. No.	Art. No.	Art. No.	Art. No.	Art. No.	Art. No.	mm
2	1,8–2,1	max. 2,2	6–28	max. 30	*200.C53.10*	*210.D53.10*	*200.C53.00*	*210.D53.00*	*200.C21.00*	*210.D21.00*	0,10
2,5	2,4–2,7	max. 2,9	7–50	max. 53	*201.C53.10*	*211.D53.10*	*201.C53.00*	*211.D53.00*	*201.C23.00*	*211.D23.00*	0,15
3	2,8–3,2	max. 3,1	8–19	max. 22	*202.853.10*	*212.753.10*	*202.853.00*	*212.753.00*	*202.821.00*	*212.721.00*	0,10
			20–39	max. 42					*202.823.00*	*212.723.00*	0,15
			40–60	max. 63					*202.825.00*	*212.725.00*	0,20
3,5	3,3–3,7	max. 4,3	8–19	max. 23	*203.853.10*	*213.753.10*	*203.853.00*	*213.753.00*	*203.821.00*	*213.721.00*	0,10
			20–39	max. 43					*203.823.00*	*213.723.00*	0,15
			40–65	max. 69					*203.825.00*	*213.725.00*	0,20
4	3,7–4,2	max. 4,2	6–19	max. 23	*204.853.10*	*214.753.10*	*204.853.00*	*214.753.00*	*204.823.00*	*214.723.00*	0,15
			20–39	max. 43					*204.826.00*	*214.726.00*	0,25
			40–60	max. 64					*204.827.00*	*214.727.00*	0,30
4,5	4,2–4,5	max. 5,0	6–24	max. 29	*205.153.10*	*215.253.10*	*205.153.00*	*215.253.00*	*205.123.00*	*215.223.00*	0,15
			25–59	max. 64					*205.126.00*	*215.226.00*	0,25
			60–90	max. 95					*205.127.00*	*215.227.00*	0,30
5	4,6–5,2	max. 5,3	6–24	max. 29	*206.153.10*	*216.253.10*	*206.153.00*	*216.253.00*	*206.123.00*	*216.223.00*	0,15
			25–59	max. 64					*206.126.00*	*216.226.00*	0,25
			60–90	max. 95					*206.127.00*	*216.227.00*	0,30
8	7,5–8,3	max. 9,5	30–100	max. 110	*207.A53.10*	*217.B53.10*	*207.A53.00*	*217.B53.00*	*207.A29.00*	*217.B29.00*	0,40
			101–300	max. 310					*207.A2E.00*	*217.B2E.00*	0,60
			301–550	max. 560					*207.A2J.00*	*217.B2J.00*	0,80
10	9,7–10,5	max. 10,5	30–100	max. 110	*208.A53.10*	*218.B53.10*	*208.A53.00*	*218.B53.00*	*208.A29.00*	*218.B29.00*	0,40
			101–300	max. 310					*208.A2E.00*	*218.B2E.00*	0,60
			301–550	max. 560					*208.A2J.00*	*218.B2J.00*	0,80

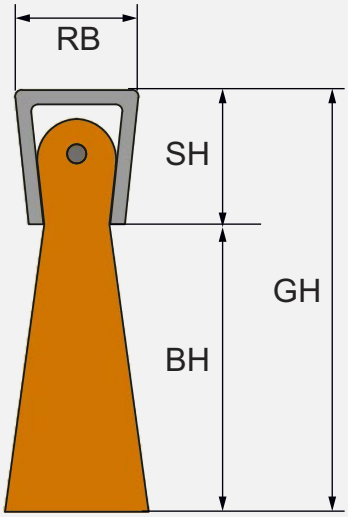

Strip brushes for slots / profiles
We offer strip brushes in different sizes as well as different backing width and length of the legs. Depending on the brush application we offer different filling materials.

The mentioned dimensions vary due to the density, the thickness and the selection of the trim material. Upon request, all brushes can be adapted to existing profiles.

Ordering information
For all strip brushes, please **always indicate in addition** to the article number
- the desired trim height (BH)
- the total length (GL)

We will automatically select the optimum filament diameter for you based on the fill height.
The given article numbers always refer to a brush without a frame coating.
For all other versions, please use the inquiry form on page 17.

For *items printed in italics* consider our minimum order value (see page 19).

PA	= Polyamide
ROS	= Horse hair (mixed with 30% Polyethylene)
STV	= Zinc-plated steel
ROF	= Stainless steel

Strip brushes in aluminum profile

Strip brushes in aluminum profile								ROS grey		ROS black		PA 6.6 black		
Brush type	Profile type	SH	SL	FB	FH	BH	GH	Backing STV	Backing ROF	Backing STV	Backing ROF	Backing STV	Backing ROF	Filament Ø
		mm	mm	mm	mm	mm	mm	Art. No.	Art. No.	Art. No.	Art. No.	Art. No.	Art. No.	mm
2,5	13,5 A	4,0	–	4,4	13,5	4–47	max. 61	*261.C53.10*	*271.D53.10*	*261.C53.00*	*271.D53.00*	*261.C23.00*	*271.D23.00*	0,15
4	15 A	7,0	–	7,3	15	3–16	max. 31	*264.853.10*	*274.753.10*	*264.853.00*	*274.753.00*	*264.823.00*	*274.723.00*	0,15
						17–36	max. 51					*264.826.00*	*274.726.00*	0,25
						37–57	max. 72					*264.827.00*	*274.727.00*	0,30
	16 AG	–	16,0	7,3	7,0	3–16	max. 23	*265.853.10*	*275.753.10*	*265.853.00*	*275.753.00*	*265.823.00*	*275.723.00*	0,15
						17–36	max. 43					*265.826.00*	*275.726.00*	0,25
						37–57	max. 64					*265.827.00*	*275.727.00*	0,30
5	40/5 A	9,2	–	8,8	40	3–21	max. 61	*269.153.10*	*279.253.10*	*269.153.00*	*279.253.00*	*269.123.00*	*279.223.00*	0,15
						22–56	max. 96					*269.126.00*	*279.226.00*	0,25
						57–87	max. 127					*269.127.00*	*279.227.00*	0,30
	25 A	9,2	–	8,8	25	3–21	max. 46	*262.153.10*	*272.253.10*	*262.153.00*	*272.253.00*	*262.123.00*	*272.223.00*	0,15
						22–56	max. 81					*262.126.00*	*272.226.00*	0,25
						57–87	max. 112					*262.127.00*	*272.227.00*	0,30
	17 A	9,2	–	8,8	17	3–21	max. 38	*266.153.10*	*276.253.10*	*266.153.00*	*276.253.00*	*266.123.00*	*276.223.00*	0,15
						22–56	max. 73					*266.126.00*	*276.226.00*	0,25
						57–87	max. 104					*266.127.00*	*276.227.00*	0,30
	25 AG	–	25	8,5	8,5	3–21	max. 30	*263.153.10*	*273.253.10*	*263.153.00*	*273.253.00*	*263.123.00*	*273.223.00*	0,15
						22–56	max. 65					*263.126.00*	*273.226.00*	0,25
						57–87	max. 96					*263.127.00*	*273.227.00*	0,30
	18 AG	–	18	8,5	8,5	3–21	max. 30	*260.153.10*	*270.253.10*	*260.153.00*	*270.253.00*	*260.123.00*	*270.223.00*	0,15
						22–56	max. 65					*260.126.00*	*270.226.00*	0,25
						57–87	max. 96					*260.127.00*	*270.227.00*	0,30
8	40/8 A	13,5	–	12,5	40	27–97	max. 137	*267.A53.10*	*277.B53.10*	*267.A53.00*	*277.B53.00*	*267.A29.00*	*277.B29.00*	0,40
						98–297	max. 337					*267.A2E.00*	*277.B2E.00*	0,60
						298–547	max. 587					*267.A2J.00*	*277.B2J.00*	0,80
	40/8 AG	–	40	12,5	13,5	27–97	max. 111	*268.A53.10*	*278.B53.10*	*268.A53.00*	*278.B53.00*	*268.A29.00*	*278.B29.00*	0,40
						98–297	max. 311					*268.A2E.00*	*278.B2E.00*	0,60
						298–547	max. 561					*268.A2J.00*	*278.B2J.00*	0,80

h-profile / Type A

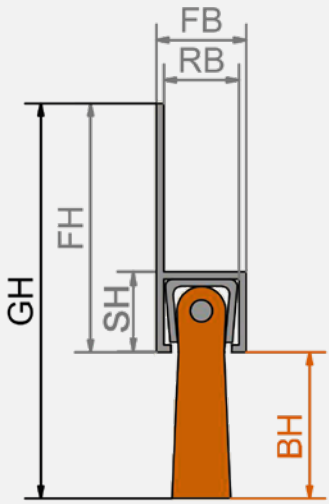

F-profile / Type AG

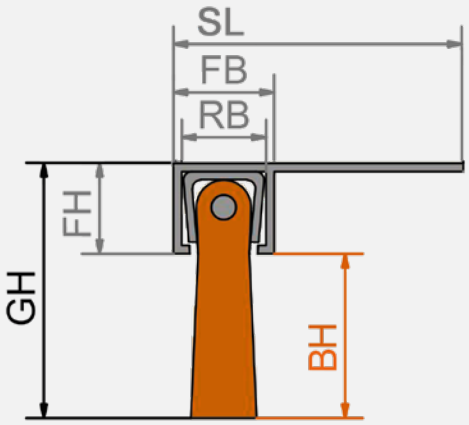

Profiles
We supply h- and F-profiles made of aluminum for strip brushes. On request we can produce the profiles with perforation or/and notches at the profile legs as well as cut them on requested measurement. Anodized and powder coated profiles are also available in different colors upon request.

Standard lenghts of the profiles:
1 000 mm, 1 100 mm, 1 200 mm, 1 300 mm, 2 000 mm, 2 500 mm, 3 000 mm.

For *items printed in italics* consider our minimum order value (see page 19).

PA	= Polyamide
ROS	= Horse hair (mixed with 30% Polyethylene)
STV	= Zinc-plated steel
ROF	= Stainless steel

Of course, you can get all profiles individually, without brush, as well.

Ordering information
For all strip brushes, please **always indicate in addition** to the article number
- the desired trim height (BH)
- the total length (GL)

We will automatically select the optimum filament diameter for you based on the fill height.
The given article numbers always refer to a brush without a frame coating.
For all other versions, please use the inquiry form on page 17.

Shaped strip brushes, filling facing outwards

Shaped strip brushes, filling facing outwards							ROS black or grey		PA 6.6 black		
Type	RB	SH	Ø innen	Ø aussen	BH	GH	Backing STV	Backing ROF	Backing STV	Backing ROF	Filament Ø
	mm	mm	mm	mm	mm	mm	Art. No.	Art. No.	Art. No.	Art. No.	mm
2,5	2,4–2,7	max. 2,9	6–80	26–186	7–50	max. 53	*on request*	*on request*	*on request*	*on request*	0,15
3	2,8–3,2	max. 3,1	12–80	34–206	8–19	max. 22	*on request*	*on request*	*on request*	*on request*	0,10
					20–39	max. 42			*on request*	*on request*	0,15
					40–60	max. 63			*on request*	*on request*	0,20
4	3,7–4,2	max. 4,2	20–140	40–266	6–19	max. 23	*on request*	*on request*	*on request*	*on request*	0,15
					20–39	max. 43			*on request*	*on request*	0,25
					40–60	max. 64			*on request*	*on request*	0,30
5	4,6–5,2	max. 5,3	25–140	47–326	6–24	max. 29	*on request*	*on request*	*on request*	*on request*	0,15
					25–59	max. 64			*on request*	*on request*	0,25
					60–90	max. 95			*on request*	*on request*	0,30
8	7,5–8,3	max. 9,5	80–320	160–1000	30–100	max. 110	*on request*	*on request*	*on request*	*on request*	0,40
					101–300	max. 310			*on request*	*on request*	0,60
					301–550	max. 560			*on request*	*on request*	0,80

Special shaped strip brushes
Special shaped strip brushes complement our assortment of classic strip brushes.
Spiral or ring shaped brushes are available with outward or inward facing filament.

Strip brushes with **filling facing outward** can be used for cleaning, polishing, for applying liquids, for gentle transport and for deburring.

We offer strip brushes in different sizes and backing width and height. Depending on the individual application we offer different filling materials.

Ordering information
For all shaped strip brushes, please **always indicate in addition** to the article number
- the desired trim height (BH)
- inner & outer diameter
- work width

Please use the inquiry form on page 18.

We will automatically select the optimum filament diameter for you based on the fill height.

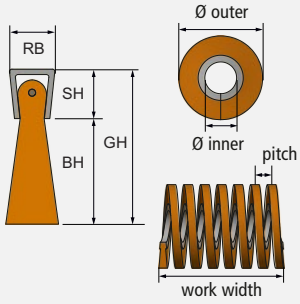

Shaped strip brushes, filling facing outwards

For *items printed in italics* consider our minimum order value (see page 19).

PA = Polyamide
ROS = Horse hair (mixed with 30% Polyethylene)
STV = Zinc-plated steel
ROF = Stainless steel

Shaped strip brushes, filling facing inwards

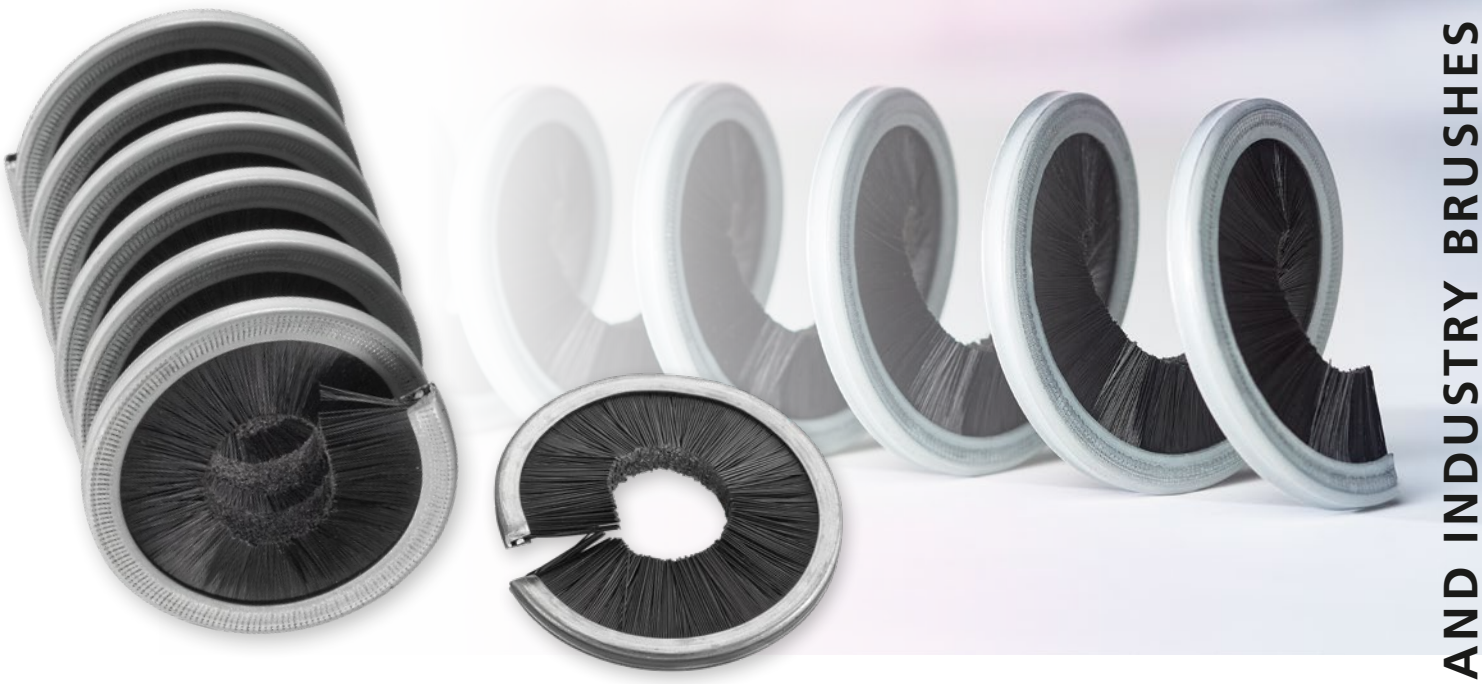

Shaped strip brushes, filling facing inwards							ROS black or grey		PA 6.6 black		
Typ	RB	SH	Ø innen	Ø aussen	BH	GH	Backing STV	Backing ROF	Backing STV	Backing ROF	Filament Ø
	mm	mm	mm	mm	mm	mm	Art. No.	Art. No.	Art. No.	Art. No.	mm
2,5	2,4–2,7	max. 2,9	0–240	20–260	7–50	max. 53	*on request*	*on request*	*on request*	*on request*	0,15
					8–19	max. 22			*on request*	*on request*	0,10
3	2,8–3,2	max. 3,1	0–260	22–290	20–39	max. 42	*on request*	*on request*	*on request*	*on request*	0,15
					40–60	max. 63			*on request*	*on request*	0,20
					6–19	max. 23			*on request*	*on request*	0,15
4	3,7–4,2	max. 4,2	0–320	20–340	20–39	max. 43	*on request*	*on request*	*on request*	*on request*	0,25
					40–60	max. 64			*on request*	*on request*	0,30
					6–24	max. 29			*on request*	*on request*	0,15
5	4,6–5,2	max. 5,3	0–320	22–345	25–59	max. 64	*on request*	*on request*	*on request*	*on request*	0,25
					60–90	max. 95			*on request*	*on request*	0,30
					30–100	max. 110			*on request*	*on request*	0,40
8	7,5–8,3	max. 9,5	0–420	80–500	101–300	max. 310	*on request*	*on request*	*on request*	*on request*	0,60
					301–550	max. 560			*on request*	*on request*	0,80

Strip brushes with **filling facing inwards** can be used for sealing, cleaning and carrying cylindrical parts in mechanical engineering, tool manufacturing and vehicle construction.

We offer strip brushes in different sizes and backing width and height. Depending on the individual application we offer different filling materials.

Ordering information
For all shaped strip brushes, please **always indicate in addition** to the article number
- the desired trim height (BH)
- inner & outer diameter
- work width

Please use the inquiry form on page 18.

We will automatically select the optimum filament diameter for you based on the fill height.

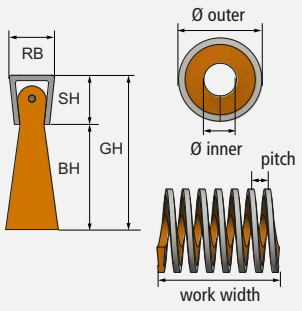

Shaped strip brushes, filling facing inwards

For *items printed in italics* consider our minimum order value (see page 19).

PA	= Polyamide
ROS	= Horse hair (mixed with 30% Polyethylene)
STV	= Zinc-plated steel
ROF	= Stainless steel

Cup shaped strip brushes

Cup shaped strip brushes						ROS black or grey		PA 6.6 black		
Type	RB	SH	Ø inner/outer	BH	GH	Backing STV	Backing ROF	Backing STV	Backing ROF	Filament Ø
	mm	mm	mm	mm	mm	Art. No.	Art. No.	Art. No.	Art. No.	mm
2,5	2,4–2,7	max. 2,9	14–120	7–50	max. 53	*on request*	*on request*	*on request*	*on request*	0,15
3	2,8–3,2	max. 3,1	15–130	8–19	max. 22	*on request*	*on request*	*on request*	*on request*	0,10
				20–39	max. 42			*on request*	*on request*	0,15
				40–60	max. 63			*on request*	*on request*	0,20
4	3,7–4,2	max. 4,2	25–140	6–19	max. 23	*on request*	*on request*	*on request*	*on request*	0,15
				20–39	max. 43			*on request*	*on request*	0,25
				40–60	max. 64			*on request*	*on request*	0,30
5	4,6–5,2	max. 5,3	50–180	6–24	max. 29	*on request*	*on request*	*on request*	*on request*	0,15
				25–59	max. 64			*on request*	*on request*	0,25
				60–90	max. 95			*on request*	*on request*	0,30
8	7,5–8,3	max. 9,5	90–500	30–100	max. 110	*on request*	*on request*	*on request*	*on request*	0,40
				101–300	max. 310			*on request*	*on request*	0,60
				301–550	max. 560			*on request*	*on request*	0,80

Cup shaped strip brushes can be used for sealing rotating tools or nozzles, for cleaning, for applying liquids and polishing surfaces.

Ordering information
For all shaped strip brushes, please **always indicate in addition** to the article number
- the desired trim height (BH)
- inner & outer diameter
- work width

Please use the inquiry form on page 18.

We will automatically select the optimum filament diameter for you based on the fill height.

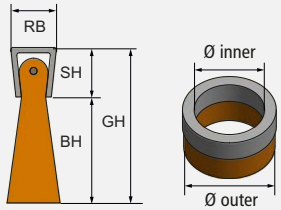

Cup shaped strip brushes

For *items printed in italics* consider our minimum order value (see page 19).

PA = Polyamide
ROS = Horse hair (mixed with 30% Polyethylene)
STV = Zinc-plated steel
ROF = Stainless steel

Inquiry for straight strip brushes

Drawing / description of application

☐ Sealing brushes straight
(Type h / FH)

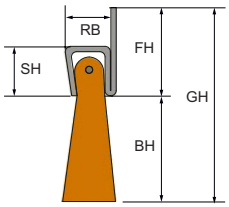

☐ Sealing brushes angled
(Type F / SL)

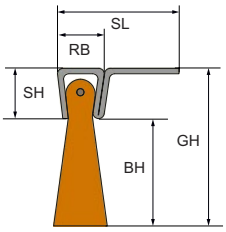

☐ Strip brushes for slots

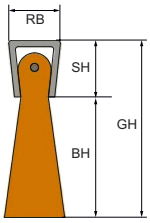

☐ Strip brushes in aluminum slot

Form/Type of profile

☐ h / A ☐ F / AG

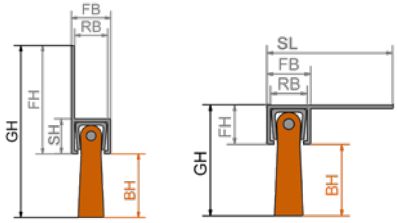

☐ Predefined perforation

☐ vertical

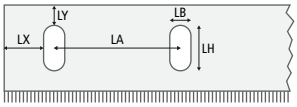

☐ horizontal

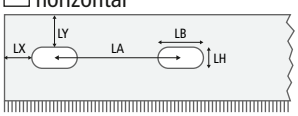

Anodization

☐ Blank / none
☐ Silver
☐ Dark bronze
☐ Black

Sender: Company, contact person

No. of pieces _____

Brush length _____ mm

Application _____ ☐ **dry** ☐ **wet**

☐ sealing
☐ sloughing
☐ cleaning
☐ deburring
☐ roughening
☐ transporting
☐ other _____

Material to be treated ____°C Temperature

☐ steel
☐ aluminum
☐ wood
☐ stainless steel
☐ plastic
☐ other _____

Filling material

☐ horse hair ☐ mixed with 30% PE ☐ pure
☐ Polyamide (PA)
☐ Polyethylene (PE)
☐ Polypropylene (PP)
☐ steel
☐ brass coated steel
☐ brass
☐ stainless steel
☐ abrasive filament (SIC)
☐ abrasive filament (AO)
☐ fibre
☐ other _____

☐ Diameter for filling material _____ mm

Please indicate the dimensions according to the technical drawing

BH filling height _____ mm
RB backing width _____ mm
SH socket height _____ mm
GH total height _____ mm
FH backing height _____ mm
SL socket length _____ mm

LB perforation width _____ mm
LH perforation height _____ mm
LY distance _____ mm
from upper backing edge
LX distance _____ mm
from lateral backing edge
LA hole spacing _____ mm
\+ number of holes _____ pcs.

Inquiries and info under:
Tel.: +49 9082 707-0 info@lessmann.com
Fax: +49 9082 707-76 www.lessmann.com

Inquiry for shaped strip brushes

Drawing / description of application

☐ Shaped strip brushes, filling facing outwards

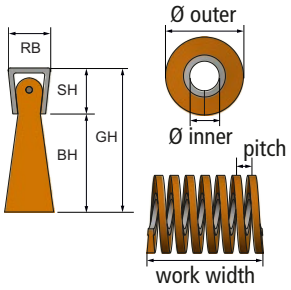

Form
☐ Spiral ☐ Ring

☐ Shaped strip brushes, filling facing inwards

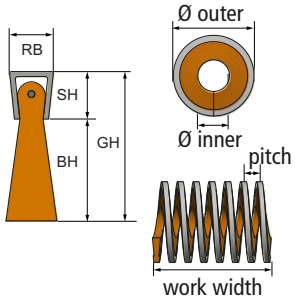

Form
☐ Spiral ☐ Ring

☐ Cup shaped strip brushes

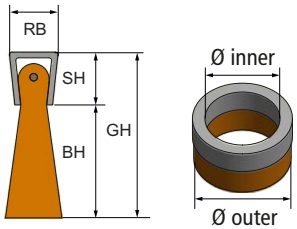

Sender: Company, contact person

No. of pieces _____

Application _____ ☐ **dry** ☐ **wet**

- ☐ sealing
- ☐ sloughing
- ☐ cleaning
- ☐ deburring
- ☐ roughening
- ☐ transporting
- ☐ other _____

Material to be treated ____°C Temperature

- ☐ steel
- ☐ aluminum
- ☐ wood
- ☐ stainless steel
- ☐ plastic
- ☐ other _____

Filling material

- ☐ horse hair ☐ mixed with 30% PE ☐ pure
- ☐ Polyamide (PA)
- ☐ Polyethylene (PE)
- ☐ Polypropylene (PP)
- ☐ steel
- ☐ brass coated steel
- ☐ brass
- ☐ stainless steel
- ☐ abrasive filament (SIC)
- ☐ abrasive filament (AO)
- ☐ fibre
- ☐ other _____

☐ Diameter for filling material _____ mm

Please indicate the dimensions according to the technical drawing

BH filling height _____ mm
RB backing width _____ mm
SH socket height _____ mm
GH total height _____ mm
FH backing height _____ mm
SL socket length _____ mm
diameter inner _____ mm
diameter outer _____ mm
work width _____ mm
number of windings (spiral brushes) _____ pcs.
pitch (if required) _____ mm

Inquiries and info under: Tel.: +49 9082 707-0 info@lessmann.com
Fax: +49 9082 707-76 www.lessmann.com

General conditions of sale and delivery

1. Scope

(1) Our general conditions of sale apply exclusively; we do not acknowledge any conditions of the customer which are contrary to or deviate from our general conditions of sale, unless we explicitly consented in writing to their validity.
(2) All agreements reached between us and the customer for the purpose of carrying out this contract must be made in writing. This applies also to offers and orders which were agreed with our sales representatives.
(3) Our general conditions of sale shall apply only to commercial businesses, not to private consumers.

2. Offer

(1) All prices contained in an offer are subject to alterations. The prices are valid as fixed prices for 6 months, only after acknowledgement of the order.
(2) We reserve rights of ownership and copyrights on diagrams, drawings, design worksheets and other documents; they must not be made accessible to third parties.

3. Prices – Terms of Payment

(1) All prices are in € (EURO), ex works Oettingen, exclusive costs of packaging.
(2) Our prices do not include Value-Added Tax.
(3) Unless stated otherwise in the acknowledgement of the order we grant 2 % cash discount on payments in cash made within 10 days after the date of the invoice, payments shall be made within 30 days from the date of the invoice.
(4) In case of a delayed payment, we are entitled to demand interest at a rate of 4 % p.a. above the actual basis rate of the EZB.

4. Period of Delivery – Despatch – Delivery on Demand

(1) Our liability in cases of delayed delivery is limited to cases of intent and gross negligence.
(2) In case of delayed delivery the customer has to set us an appropriate time limit for the delivery. If we have not delivered by that date the customer has the right to withdraw from the contract. Customer's rights to claim damages is limited to the extent of the foreseeable damage and to cases of intent and gross negligence. In other cases the right to claim damages is limited to the amount of the contract price.
(3) The limitations according to paragraphs (1) and (2), shall not apply in case a delivery at a fixed time has been agreed, or if the customer has lost its interest in the delivery due to the delay.
(4) We will keep our delivery obligations on condition that the customer will keep its obligations correctly and in time.
(5) Unless otherwise agreed we will take care of the most favourable way of transport at our own discretion on account and at the risk of customer. This shall also apply to carriage paid and FOB deliveries.
(6) If delivery on demand has been agreed we may buy the material necessary to produce the complete order and we may produce the complete quantity immediately.

5. Warranty for Defects – Liability

(1) The customer shall examine our deliveries immediately and report complaints about defects immediately. We can only be held responsible for defects if the customer has correctly fulfilled this obligation.
(2) In case of defects we will either remedy the defect or replace the product by a not defective one. In case we replace the product we will pay the additional expenses. We will bear transport costs for the transport not farer than to the place of performance. In case of delayed delivery the customer has the option of either withdrawing from the contract or demanding a reduction in the price. Customer has no further claims. Our liability is not limited in cases of intent, gross negligence, undertaking of a guarantee, violation of an obligation non compliance with which would endanger the purpose of the contract, for damages caused by injury to life, body or health and for claims based on the German product liability law (Produkthaftungsgesetz).
(3) Any and all claims against us are subject to a limitation period of 12 months from delivery. This does not apply as far as §§ 438 subpar. 1 No 2, 479 subpar. 1 and 634a subpar. 1 No 2 of the German Civil Code lays down a longer period or if we are liable due to intent or gross negligence.

6. Reservation of Ownership

(1) The customer shall obtain ownership of the delivered products only after we have received all payments from the business relationship with the customer.
(2) In the event of seizures or other actions by third parties, the customer shall inform us thereof immediately in writing. As far as the third party is not able to reimburse our total costs of legal action in accordance with paragraph 771 of the German Code of Civil Procedure, the customer shall reimburse us the loss.
(3) The customer is entitled to sell the products. The customer shall assign all rights and titles arising from the further sale to us regardless of wheth er the products have been processed or not. The customer remains entitled to collect the payments from the sales. We shall not collect any payments except the customer is behind with payments and/or has gone bankrupt and/or has stopped payments.
(4) Any processing, marking or other changes of the products by the customer shall be done on our behalf. If we have to take back the products, the customer shall give us the name and address of the customer who wished the products to be processed, marked or changed.
(5) We shall, at the request of customer, release our rights and titles up to the amount which exceeds 20% of the value of our payment claim to be protected. The selection of the rights and titles to be released shall be at our discretion.

7. Place of Jurisdiction – Place of Performance – Law

(1) Place of jurisdiction shall be the place of our office. We also may take proceedings against the customer at the place of its office.
(2) Our office is the place of performance, unless our acknowledgement of the order stated something different.
(3) The laws of the Federal Republic of Germany shall apply. The United Nations Convention on Contracts for the International Sale of Goods (CISG) shall not apply.

8. Miscellaneous

(1) Special designs can not be taken back. Our deliveries may deviate from the agreed volume by ± 15 %.
(2) The minimum order value, as well as extra payments for small volume purchases, are fixed in the actual price list.
(3) Quantities deviating from the standard packet will be increased or decreased to the corresponding standard packet, otherwise extra payments per incomplete packet will be charged in accordance with the actual price list.

Minumum order value:
For stock articles (**bold** printed articles):
net 100.00 €

For special production and *italic* printed articles:
net 250.00 € / article

Extra payment for incomplete packets:
net 4.00 €

Shipping costs domestic and abroad:
Due to the bulky form only after expenditure or on request.
The length of profiles and brushes is limited to max. 5 000 mm due to shipping restrictions.

Express delivery on extra charge available.

We reserve the right to change the construction and design of the brushes in the course of further technical developments. Information to measurements are approximate and not binding. All measurements are in mm.

The LESSMANN free dimension tolerances apply. Request these if necessary.

LESSMANN®
THE GERMAN BRUSH COMPANY

MORE THAN 10.000 SOLUTIONS...

Due to our own engineering, tool and equipment design and our modern, also flexible, production facilities, we are able to produce special brushes in small and large batches.

CERTIFIED ACCORDING TO DIN EN ISO 9001:2015

Lessmann GmbH
Lucas-Schultes-Str. 2
86732 Oettingen
Germany

Tel.: +49 9082 707-0
Fax: +49 9082 707-77
www.lessmann.com
info@lessmann.com

Subsidiary Solingen
Brühler Str. 63
42657 Solingen
Germany

Tel.: +49 212 645899-0
Fax: +49 212 645899-29
www.robert-thaler.de
info@robert-thaler.de

QUALITY MADE IN GERMANY

Subject to technical alterations, errors and misprints excepted.
11/2021 ArtNr. 99STBENG