Instrumentation Manifold Valves

SM2V / SM3V / SM5V Series

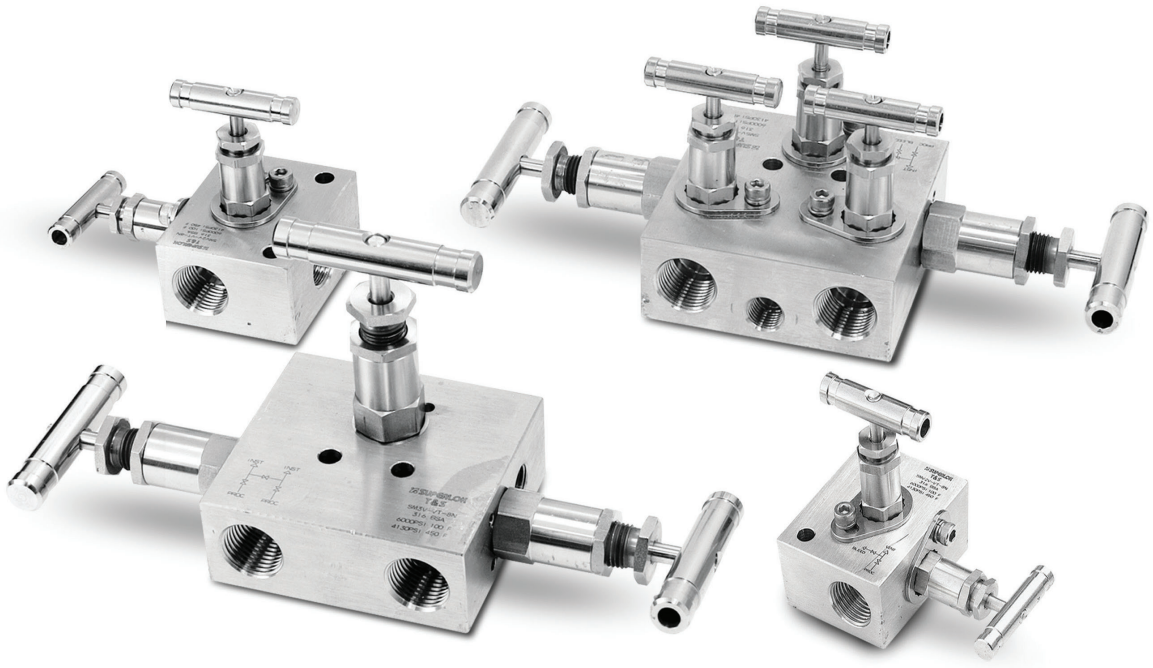

Features

- 2-,3-,and 5-valves Instrument manifolds valves.
- Pressure Rating up to 6000psig (413bar) @ 100℉(37℃)
- Temperature up to 1200℉(648℃) with optional Grafoil packing
- All 316 stainless steel construction with PTFE packing
- Each valve of every manifold is factory tested with nitrogen gas to a maximum allowable leak rate of 0.1scc/min.

Ordering Information

Example : **SM2 V - F 8N - M40**

1	2		3	4		5

1. Valve Series

□ **SM2** = 2-Valve Manifolds
□ **SM3** = 3-Valve Manifolds
□ **SM5** = 5-Valve Manifolds

2. Mounting Type

□ **V** = Horizontal Style (Remote Mounting)
□ **VF** = Horizontal Single Flange Style (Direct Mounting)
□ **VDF** = Horizontal Dual Flange Style (Direct Mounting)
□ **VD** = Vertical Style (Direct Mounting)

3. End Connection Type

□ **S** = Superlok Female Tube Fitting
□ **F** = Female Pipe Thread

4. Port Size

Size (inch)	1/2
Screwed NPT	8N

5. Body Material

□ ***(Blank)*** = 316 Stainless Steel
□ **M40** = Alloy 400 (Monel)

※ For special sizes and configurations, please consult BMT (SUPERLOK) sales representative.

Mako Products - Superlokworld.com
MAKO PRODUCTS
844-200-MAKO (6256)
sales@mako-products.net

Technical Data

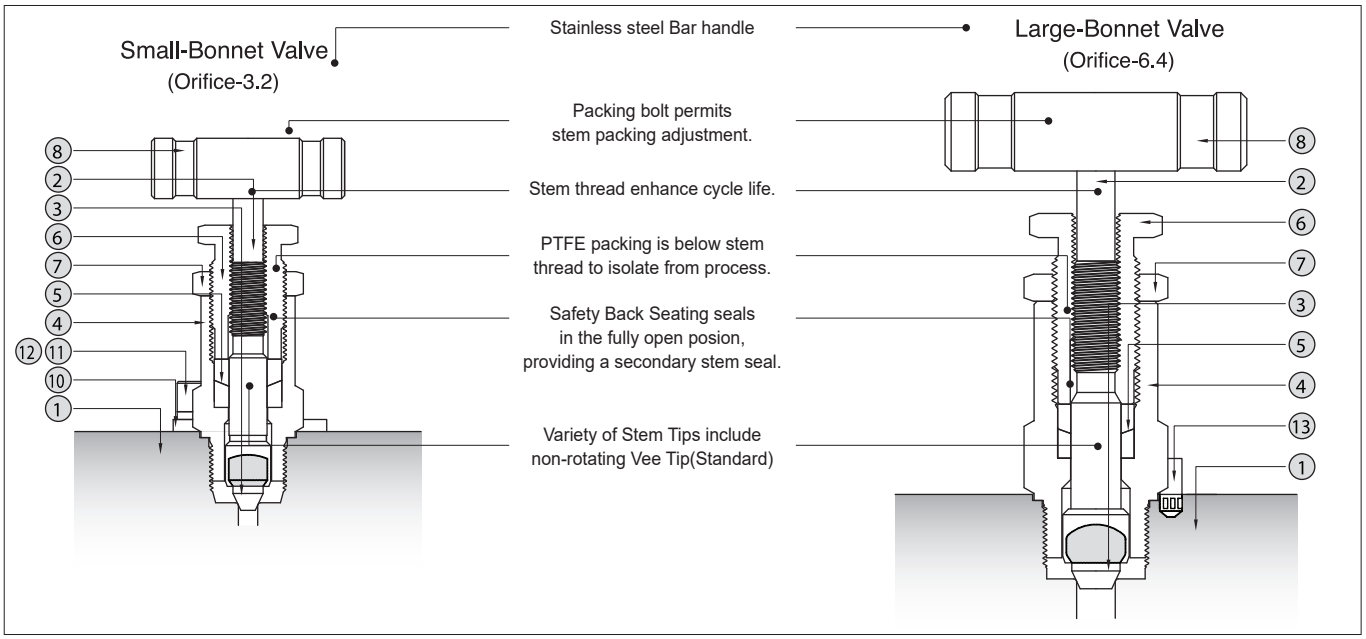

Materials of Construction

Component		Material Grade
*1	Body	SS316 / A276 or A479
*2	Stem	SS316 / A276 or A479
*3	Vee Tip	SS316 / A479
*4	Bonnet	SS316 / A276 / or A479
*5	Packing	PTFE
		Grafoil (optional)
6	Packing Bolt	SS316 / A276 / or A479
7	Lock Nut	SS316 / A276 / or A479
8	Handle	Stainless Steel
9	Set Screw	Stainless Steel
10	Locking Plate	Stainless Steel
11	Wrench Bolt	Stainless Steel
12	Spring Washer	Stainless Steel
13	Stop Pin	Stainless Steel

* Wetted components

Orifice

3.2mm (0.125 in.)	2-Valve Manifolds Block, Bleed Valve 5-Valve Manifolds Equalizer, Bleed Valve
6.4mm (0.250 in.)	3-Valve Manifolds Block, Equalizer Valve 5-Valve Manifolds Block Valve

Pressure-Temperature Rating

Component	SS 316	
*Packing Material	PTFE	Grafoil
Temperature(℃)	Working Pressure psig(bar)	
-65 (-53) to 100(37)	6000 (413)	6000 (413)
200 (93)	5160 (355)	5160 (355)
250 (121)	4910 (338)	4910 (338)
300 (148)	4660 (321)	4660 (321)
350 (176)	4470 (307)	4470 (307)
400 (204)	4280 (294)	4280 (294)
450 (232)	4130 (284)	4130 (284)
500 (260)	-	3980 (274)
550 (287)	-	3870 (266)
600 (315)	-	3760 (259)
650 (343)	-	3700 (254)
700 (371)	-	3600 (248)
750 (398)	-	3520 (242)
800 (426)	-	3460 (235)
850 (454)	-	3380 (232)
900 (482)	-	3280 (225)
950 (510)	-	3220 (221)
1000 (537)	-	3030 (208)
1050 (565)	-	3000 (206)
1100 (593)	-	2685 (184)
1150 (621)	-	2285 (157)
1200 (648)	-	1715 (118)

* Note
450°F(232℃) with standard PTFE packing.
1200°F(648℃) with Optional Grafoil packing.

Table of Dimensions for 2-Valve Manifolds

Horizontal Style (Remote Mounting)

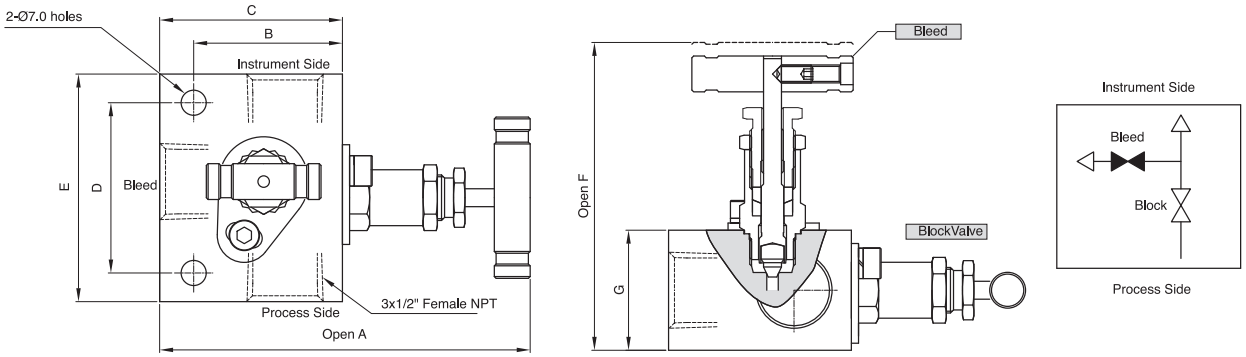

Part No.	End Connections			Weight Dimensions						
	Process	Instrument	Bleed	A	B	C	D	E	F	G
SM2V-F8N	1/2" Female NPT			103.5	41.5	51	47.5	63.5	85.9	33.5

Horizontal Single Flange Style (Direct Mounting)

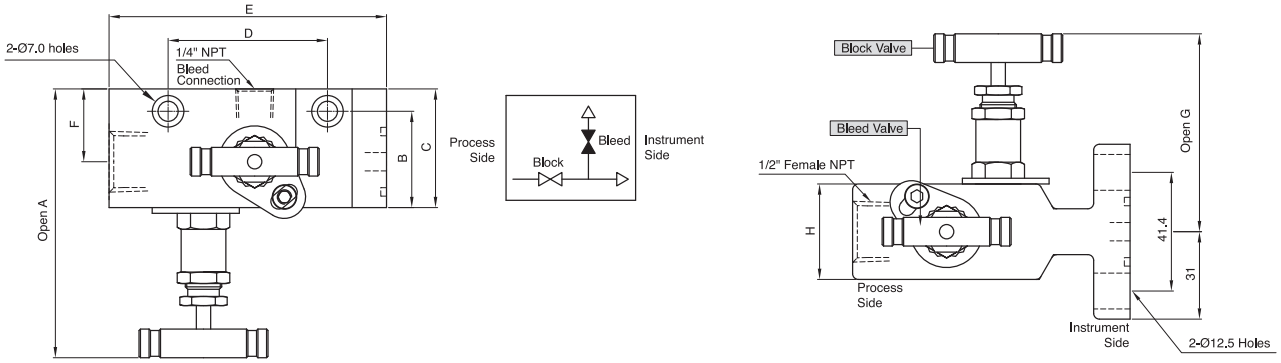

Part No.	End Connections			Weight Dimensions							
	Process	Instrument	Bleed	A	B	C	D	E	F	G	H
SM2VF-F8N	1/2" Female NPT	Flange	1/4" Female NPT	93.8	33.6	41.4	47.8	97.0	25.4	69.0	31.8

Vertical Style (Direct Mounting)

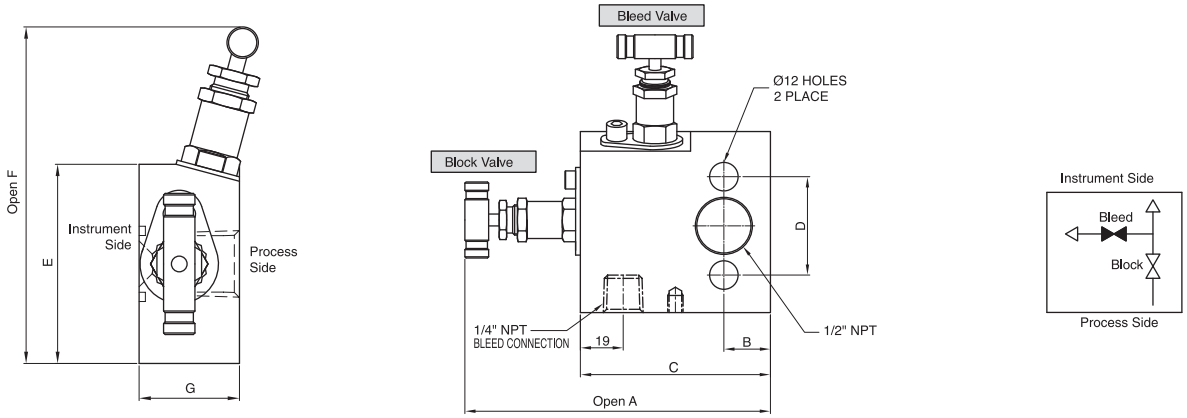

Part No.	End Connections			Weight Dimensions						
	Process	Instrument	Bleed	A	B	C	D	E	F	G
SM2VD-F8N	1/2" Female NPT	Flange	1/4" Female NPT	116.0	17.0	63.5	41.4	63.5	115.0	28.6

- Dimensions and Drawings are for reference only and are subject to change without prior notice.
-Unless otherwise specified, all dimensions are in millimeters.
-Sizes, pressure classes, and end connections not listed are available upon request.
-Dimensions shown with SUPERLOK nuts finger-tight, where applicable.