# Integral Bonnet Bar Stock Needle Valves

## SBNV Series

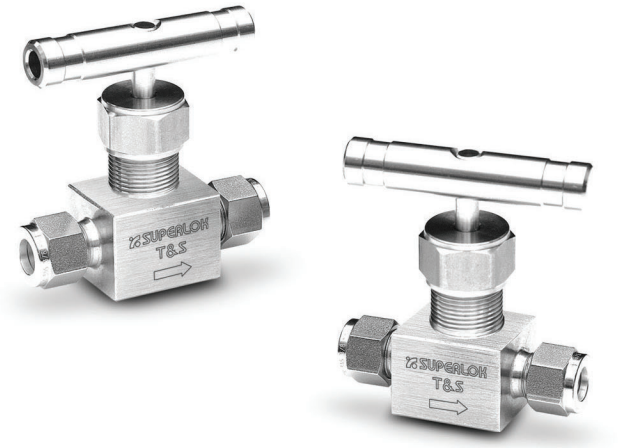


### Features

- Integral bonnet design
- Bar stock body
- Compact design
- Low operating torques
- Variety of End Connections
- Straight and Angle flow patterns
- Each and every valve is tested at the factory

### Specifications

| | |
|---|---|
| Pressure rating | 6000psig (413bar)@100°F (38°C) |
| Temperature rating | -65 to 450°F (-54 to 232°C) with PTFE packing<br>-65 to 600°F (-54 to 315°C) with PEEK packing |
| Body material | 316 stainless steel and Alloy400 |
| Orifice | 0.17″ and 0.25″ (4.3mm and 6.4mm) |

### Testing

- Each Valve is tested with nitrogen at 1000psig (69bar) to maximum allowable leak rate of 0.1 SCCM.
- Hydrostatic shell test is performed at 1.5 times of the working pressure. (Optional)

### Materials of Construction

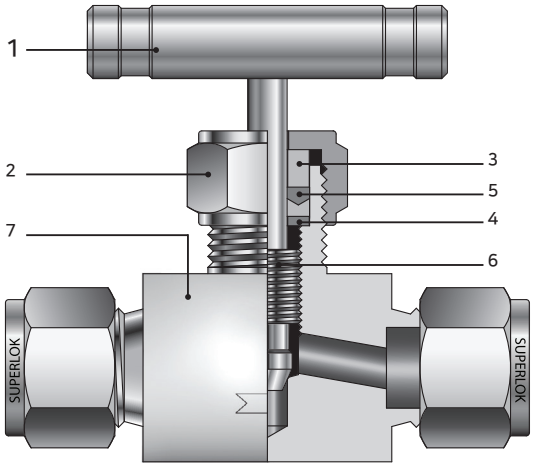


| No. | Component | Material Grade / ASTM Specification | |
|---|---|---|---|
| | | Stainless Steel | Alloy 400 |
| 1 | Bar Handle | Stainless Steel | |
| | Knob Handle | Phenolic with brass insert | |
| | Set Screw | Stainless Steel | |
| 2 | Packing Nut | SS316 / A276 | Alloy R-405/B164 |
| 3 | Packing Gland | | |
| *4 | Packing Support | | |
| *5 | Packing | PTFE (Standard), PEEK (Optional) | |
| *6 | Vee Stem | SS316 / A276 | Alloy R-405/B164 |
| | Soft Seat Stem | SS316 / A276 with PCTFE | ALLOY R-405/B164 with PCTFE |
| *7 | Body | SS316 / A276 | ALLOY R-405/B164 |

* Wetted Components


MAKO PRODUCTS
844-200-MAKO (6256)
sales@mako-products.net

## SBNV Series

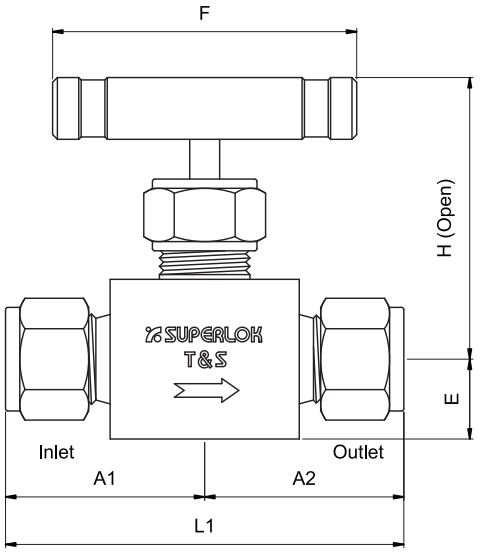


Straight Flow Pattern

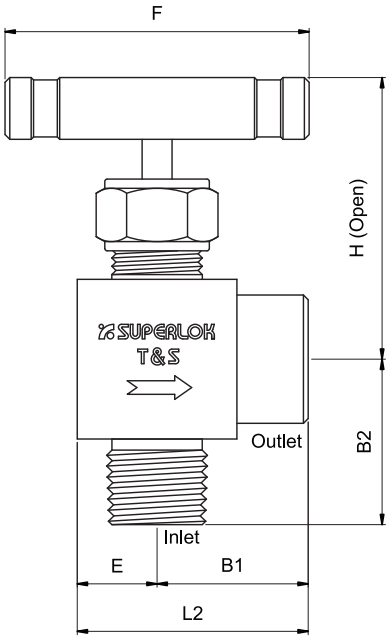


Angle Flow Pattern

## Table of Dimensions

| Part No. | | Orifice | Cv | End Connections | | Dimensions | | | | | | | | |
|---|---|---|---|---|---|---|---|---|---|---|---|---|---|---|
| | | | | Inlet | Outlet | L1 | A1 | A2 | L2 | B1 | B2 | E | F | H |
| SBNV1 | F4N | 4.3 | 0.37 | 1/4″ FEMALE NPT | | 47.6 | 23.8 | 23.8 | 36.5 | 25.4 | 25.4 | 11.1 | 45.0 | 51.0 |
| | M4N | | | 1/4″ MALE NPT | | 49.2 | 24.6 | 24.6 | - | - | - | - | | |
| | M4N-F4N | | | 1/4″ MALE NPT | 1/4″ FEMALE NPT | 48.4 | | 23.8 | 36.5 | 25.4 | 26.2 | 11.1 | | |
| | M4N-S4 | | | 1/4″ MALE NPT | 1/4″ SUPERLOK | 53.3 | | 28.7 | 39.8 | 28.7 | | | | |
| | S4 | | | 1/4″ SUPERLOK | | 62.4 | 31.2 | 31.2 | | | 29.7 | | | |
| SBNV2 | F6N | 6.4 | 0.73 | 3/8″ FEMALE NPT | | 64.0 | 32.0 | 32.0 | 48.6 | 31.8 | 31.8 | 16.8 | 64.0 | 63.0 |
| | F8N | | | 1/2″ FEMALE NPT | | | | | | | 35.8 | | | |
| | M6N-F6N | | | 3/8″ MALE NPT | 3/8″ FEMALE NPT | | | | | | 31.0 | | | |
| | M8N-F8N | | | 1/2″ MALE NPT | 1/2″ FEMALE NPT | 64.5 | 32.5 | | | | 35.8 | | | |
| | M12N-F8N | | | 3/4″ MALE NPT | 1/2″ FEMALE NPT | 63.8 | 31.8 | | - | - | - | - | | |
| | M6N-S8 | | | 3/8″ MALE NPT | 1/2″ SUPERLOK | 73.7 | | 41.9 | | | | | | |
| | S6 | | | 3/8″ SUPERLOK | | 78.2 | 39.1 | 39.1 | | | | | | |
| | S8 | | | 1/2″ SUPERLOK | | 83.8 | 41.9 | 41.9 | | | | | | |

- Dimensions and Drawings are for reference only and are subject to change without prior notice.
-Unless otherwise specified, all dimensions are in millimeters.
-Sizes, pressure classes, and end connections not listed are available upon request.
-Dimensions shown with SUPERLOK nuts finger-tight, where applicable.

# Technical Data

**Pressure - Temperature Rating**

| Body Material | Stem | Temperature Rating | Pressure Rating@ -65°F~100°F (-54°C~38°C) |
|---|---|---|---|
| SS316 | Vee | -65°F~450°F (-54°C~232°C) | 6000psig (413 bar) |
| | Soft Seat | -65°F~200°F (-54°C~93°C) | |
| Alloy 400 | Vee | -65°F~450°F (-54°C~232°C) | 5000psig (345 bar) |
| | Soft Seat | -65°F~200°F (-54°C~93°C) | |

*The above ratings are for a standard valve with PTFE packing.
*Extreme temperature fluctuations may require packing adjustment.

**Working Pressure - Temperature**

| Temperature Rating | | Pressure psig(bar) @ Temperature Rating | |
|---|---|---|---|
| | | SS316 | Alloy 400 |
| -65°F (-54°C) to | 100°F (38°C) | 6000psig (413bar) | 5000psig (435 bar) |
| | 200°F (93°C) | 5160psig (355bar) | 4400psig (303 bar) |
| | 300°F (148°C) | 4660psig (321bar) | 4120psig (284 bar) |
| | 350°F (176°C) | 4470psig (308bar) | 4050psig (279 bar) |
| | 400°F (204°C) | 4280psig (295bar) | 3980psig (274bar) |
| | 450°F (232°C) | 4130psig (284bar) | 3970psig (273 bar) |

**Packing and Body material - Temperature and Pressure Rating**

| Packing Material | Body Material | Temperature Rating | Pressure Rating@ Max. Temperature |
|---|---|---|---|
| PTFE (Standard) | SS316 | -65°F~450°F (-54°C~232°C) | 4130psig (284 bar) |
| | Alloy 400 | | 3970psig (273 bar) |
| PEEK | SS316 | -65°F~600°F (-54°C~315°C) | 3760psig (259bar) |
| | Alloy 400 | -65°F~500°F (-54°C~260°C) | 3960psig (272bar) |

* Alloy 400 not applicable over 500 °F(260 °C)
* PEEK is not recommended for service with aromatic heat transfer or concentrated sulfuric and nitric acids. Other limitations may apply.

# Flow Data at 100°F (37°C)

**Flow Coefficient at Turns Open**

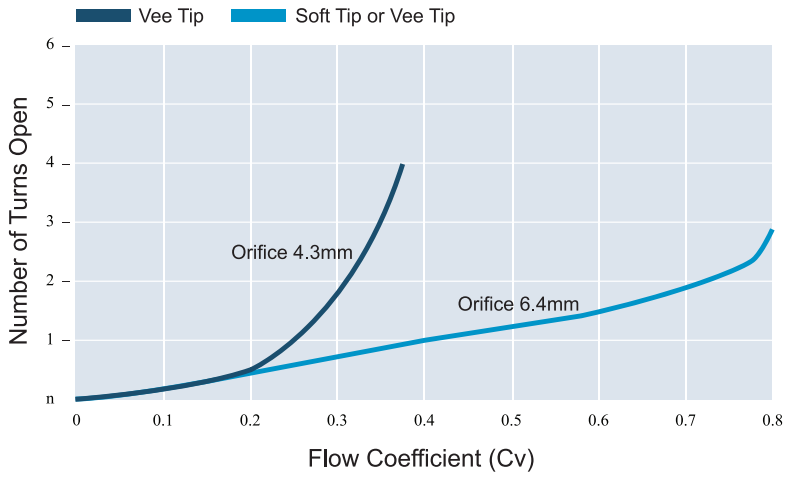


## Handle

- 316 Stainless steel bar handles are standard.
- Black phenolic knob is standard for soft seat stem Valves.
- Anodized black aluminum bar handles

## Available Stem Type

**Two stem types**

- Vee stem : All metal, Vee stem tip (Standard)
- Soft Seat Stem: PCTFE stem tip (Optional)

## Ordering Information

**Example 1 :** **SBNV2 - M6N - S8 - SS - PE - KH - M40**

| | 1 | Inlet 2 3 | Outlet 2 3 | 4 | 5 | 6 | 7 |
|---|---|---|---|---|---|---|---|
| Example 1 : | SBNV2 | - M6N | - S8 | - SS | - PE | - KH | - M40 |

**Example 2 :** **SBNV1 - S4**

| | 1 | 2 3 |
|---|---|---|
| Example 2 : | SBNV1 | - S4 |

### 1. Valve Series

**Straight Flow Pattern**

□ **SBNV1** = 4.3mm Orifice
□ **SBNV2** = 6.4mm Orifice

**Angle Flow Pattern**

□ **SBNV1A** = 4.3mm Orifice
□ **SBNV2A** = 6.4mm Orifice

### 2. Port Type

□ **S** = SUPERLOK Tube Fitting
□ **M** = Male Pipe Thread
□ **F** = Female Pipe Thread

### 3. Port Size

**Pipe Thread Designator**

| Size (inch) | 1/8 | 1/4 | 3/8 | 1/2 | 3/4 | 1 |
|---|---|---|---|---|---|---|
| Screwed BSPT | 2R | 4R | 6R | 8R | 12R | 16R |
| Screwed NPT | 2N | 4N | 6N | 8N | 12N | 16N |

**Tube O.D Designator**

| Tube O.D (inch) | 1/4 | 3/8 | 1/2 | 3/4 | 1 |
|---|---|---|---|---|---|
| Designator | **4** | **6** | **8** | **12** | **16** |
| Tube O.D (mm) | 6 | 10 | 12 | 20 | 25 |
| Designator | **6M** | **10M** | **12M** | **20M** | **25M** |

### 4. Stem Type

□ ***(Blank)*** = Vee Stem (Standard)
□ **SS** = Soft Seat Stem

### 5. Packing Material

□ ***(Blank)*** = PTFE (Standard)
□ **PE** = PEEK

### 6. Handle

□ ***(Blank)*** = Stainless Steel Bar Handle (Standard)
□ **KH** = Black Phenolic Knob Handle
□ **AH** = Anodized black aluminum bar handle

### 7. Body Material

□ ***(Blank)*** = 316 Stainless Steel
□ **M40** = Alloy 400 (Monel)

※ For special sizes and configurations, please consult BMT (SUPERLOK) sales representative.