Deutsches Institut für Bautechnik DIBt

Member of EOTA
www.eota.eu

Approval body for construction products and types of construction

Bautechnisches Prüfamt

An institution established by the Federal and Laender Governments

Designated according to Article 29 of Regulation (EU) No 305/2011 and member of EOTA (European Organisation for Technical Assessment)

European Technical Assessment

ETA-08/0189 of 23 May 2022

English translation prepared by DIBt - Original version in German language

General Part

Technical Assessment Body issuing the European Technical Assessment:	Deutsches Institut für Bautechnik
Trade name of the construction product	allfa AUR 10 universal frame anchor
Product family to which the construction product belongs	Plastic anchor for multiple use in concrete and masonry for non-structural applications
Manufacturer	allfa Dübel GmbH Braukämperstraße 101 45899 Gelsenkirchen DEUTSCHLAND
Manufacturing plant	allfa Dübel GmbH Braukämperstraße 101 45899 Gelsenkirchen DEUTSCHLAND
This European Technical Assessment contains	14 pages including 3 annexes which form an integral part of this assessment
This European Technical Assessment is issued in accordance with Regulation (EU) No 305/2011, on the basis of	EAD 330284-00-0604, edition 12/2020
This version replaces	ETA-08/0189 issued on 3 April 2017

Deutsches Institut für Bautechnik
Kolonnenstraße 30 B | 10829 Berlin | GERMANY | Phone: +49 30 78730-0 | Fax: +49 30 78730-320 | Email: dibt@dibt.de | www.dibt.de

The European Technical Assessment is issued by the Technical Assessment Body in its official language. Translations of this European Technical Assessment in other languages shall fully correspond to the original issued document and shall be identified as such.

Communication of this European Technical Assessment, including transmission by electronic means, shall be in full. However, partial reproduction may only be made with the written consent of the issuing Technical Assessment Body. Any partial reproduction shall be identified as such.

This European Technical Assessment may be withdrawn by the issuing Technical Assessment Body, in particular pursuant to information by the Commission in accordance with Article 25(3) of Regulation (EU) No 305/2011.

Specific part

1 Technical description of the product

The allfa AUR 10 universal frame anchor is a plastic anchor consisting of a plastic sleeve made of polyamide and an accompanying specific screw of galvanised steel.

The plastic sleeve is expanded by screwing in the specific screw which presses the sleeve against the wall of the drilled hole.

The product description is given in Annex A.

2 Specification of the intended use in accordance with the applicable European Assessment Document

The performances given in Section 3 are only valid if the anchor is used in compliance with the specifications and conditions given in Annex B.

The verifications and assessment methods on which this European Technical Assessment is based lead to the assumption of a working life of the anchors of at least 50 years. The indications given on the working life cannot be interpreted as a guarantee given by the producer, but are to be regarded only as a means for choosing the right products in relation to the expected economically reasonable working life of the works.

3 Performance of the product and references to the methods used for its assessment

3.1 Safety in case of fire (BWR 2)

Essential characteristic	Performance
Reaction to fire	Class A1
Resistance to fire	See Annex C 2

3.2 Mechanical resistance and stability (BWR 4)

Essential characteristic	Performance
Resistance to steel failure under tension loading	See Annex C 1
Resistance to steel failure under shear loading	See Annex C 1
Resistance to pull-out or concrete failure under tension loading (base material group a)	See Annex C 1
Resistance in any load direction without lever arm (base material group b, c, d)	See Annexes C 1 und C 2
Edge distance and spacing (base material group a)	See Annex B 2
Edge distance and spacing (base material group b, c, d)	See Annex B 3
Displacements under short-term and long-term loading	See Annex C 1
Durability	See Annex B 1

4 Assessment and verification of constancy of performance (AVCP) system applied, with reference to its legal base

In accordance with European Assessment Document EAD 330284-00-0604 the applicable European legal act is: 97/463/EC.

The system to be applied is: 2+

5 Technical details necessary for the implementation of the AVCP system, as provided for in the applicable EAD

Technical details necessary for the implementation of the AVCP system are laid down in the control plan deposited with Deutsches Institut für Bautechnik.

Issued in Berlin on 23 May 2022 by Deutsches Institut für Bautechnik

Dipl.-Ing. Beatrix Wittstock
Head of Section

beglaubigt:
Ziegler

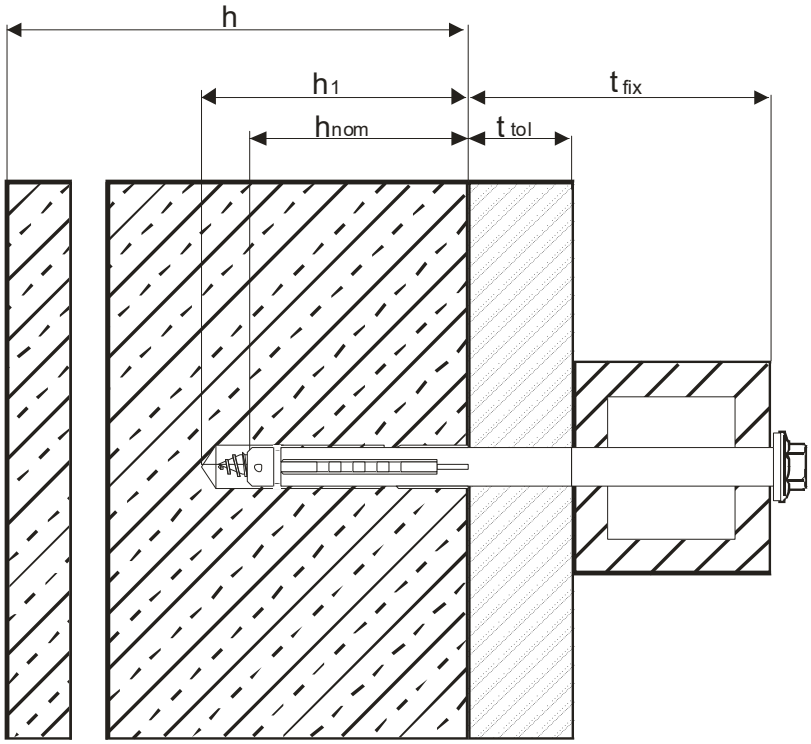

Intended use

Fixing in cracked and non-cracked concrete and masonry

Legend

h_{nom} = overall plastic anchor embedment depth in base material

h_1 = depth of drill hole to deepest point

h = thickness of member (wall)

t_{fix} = thickness of fixture

t_{tol} = thickness of layer or non-load bearing coating

allfa AUR 10 universal frame anchor	Annex A 1
Product description Installed condition	

AUR 10

Anchor sleeve

Marking:
type and dimension

example: **aur** 10x120

Marking of embedment depth

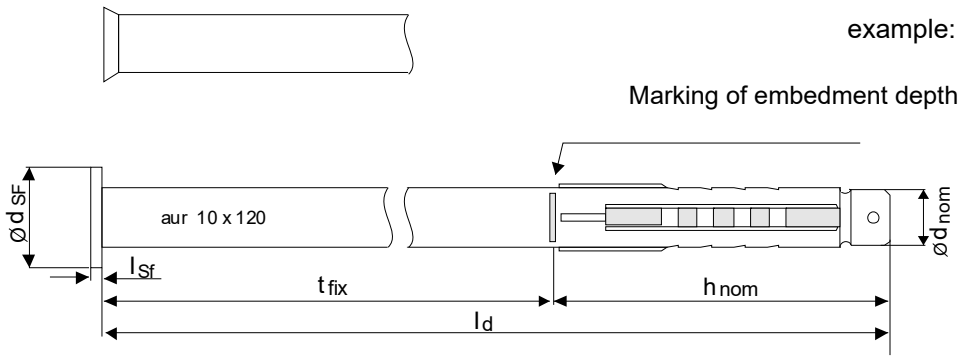

Special screw

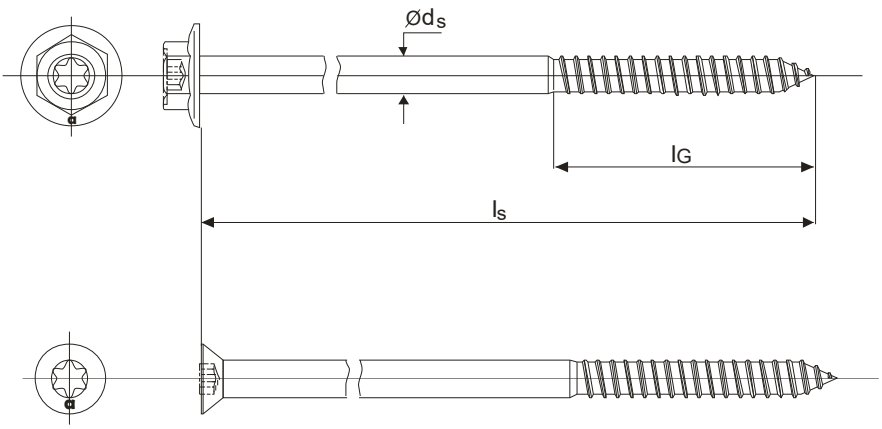

Table 1: Dimensions [mm]

	Anchor sleeve						Special screw		
	h_{nom} [mm]	Ø d_{nom} [mm]	t_{fix} [mm]	l_d [mm]	l_{Sf} [mm]	Ø d_{Sf} [mm]	Ø d_s [mm]	l_G [mm]	l_s [1)] [mm]
AUR 10	**60**	**10**	**10-200**	**80-260**	**2**	**18**	**7**	**50**	**90 -270**

[1)] To insure that the screw penetrates the anchor sleeve, $l_s = l_d + l_{Sf}$ [2)] + 7 mm.
[2)] Only valid for flat collar version.

Table 2: Materials

Name	Material
Anchor sleeve	Polyamid PA6, colour: grey
Special screw	carbon steel strength class 4.8 (f_{yk} ≥ 320 N/mm², f_{uk} ≥ 400 N/mm²), zinc coated 5 µm

allfa AUR 10 universal frame anchor	Annex A 2
Product description Anchor sleeve, special screw – marking Dimensions, materials	

Specifications of intended use

Anchorages subject to:

- Static and quasi-static loads.
- Multiple fixing of non-structural applications

Base materials:

- Reinforced or unreinforced compacted normal weight concrete without fibres with strength classes ≥ C12/15 in accordance with EN 206:2013 + A1:2016 (base material group a), Annex C 1.
- Solid brick masonry (base material group b) in accordance with Annex C 1.
  Note: The characteristic resistance is also valid for larger brick sizes and higher compressive strength of the masonry unit.
- Hollow brick masonry (base material group c) in accordance with Annex C 2.
- Mortar strength class of the masonry ≥ M2,5 in accordance with EN 998-2:2010.
- For other base materials of the base material groups a, b or c the characteristic resistance of the anchor may be determined by job site tests in accordance with TR 051:2018-04.

Temperature Range:

- c: -40 °C to +40 °C (max. short term temperature +40 °C and max long term temperature +24 °C)
- c: -40 °C to +80 °C (max. short term temperature +80 °C and max long term temperature +50 °C)

Use conditions (Environmental conditions):

- Structures subject to dry internal conditions.
- The specific screw made of galvanised steel may also be used in structures to external atmospheric exposure, if the area of the head of the screw is protected against moisture and driving rain after mounting of the fixing unit in this way, that intrusion of moisture into the anchor shaft is prevented. Therefore there shall be an external cladding or a ventilated rainscreen mounted in front of the head of the screw and the head of the screw itself shall be coated with a soft plastic, permanently elastic bitumen-oil-combination coating (e. g. undercoating or body cavity protection for cars).

Design:

- The anchorages are to be designed in accordance with TR 064:2018-05 under the responsibility of an engineer experienced in anchorages and masonry work.
- Verifiable calculation notes and drawings shall be prepared taking account of the loads to be anchored, the nature and strength of the base materials and the dimensions of the anchorage members as well as of the relevant tolerances. The position of the anchor is indicated on the design drawings.
- Fasteners are only to be used for multiple use for non-structural application, in accordance with TR 064:2018-05.

Installation:

- Hole drilling by the drill modes in accordance with Annex C1 and C 2 for base material groups a, b and c.
- Anchor installation carried out by appropriately qualified personnel and under the supervision of the person responsible for technical matters of the site.
- Installation temperature from -40 °C to +80 °C.
- Exposure to UV due to solar radiation of the anchor not protected ≤ 6 weeks.

allfa AUR 10 universal frame anchor	Annex B 1
Intended use Specifications	

Table 3: Installation parameters

Anchortype		AUR 10
Drill hole diameter	d_0 [mm]	10
Cutting diameter of drill bit	d_{cut} [mm]	10,45
Depth of drill hole to deepest point[1)]	h_1 [mm]	70
Overall plastic anchor embedment depth [1) 2)]	h_{nom} [mm]	60
Diameter of clearance hole in the fixture	d_f [mm]	10,5

1) See Annex A 1
2) For hollow and perforated masonry the influence of $h_{nom} \geq 60$ mm has to be detected by job site tests in accordance with TR 051:2018-04.

Table 4: Minimum thickness of member, edge distance and spacing in concrete

Fixing points with a spacing $a \leq s_{cr,N}$ are considered as a group with a maximum characteristic resistance $N_{Rk,p}$ in accordance with Table 8. For $a > s_{cr,N}$, the anchors are considered as single anchors, each with a characteristic resistance $N_{Rk,p}$ in accordance with Table 8.

	h_{min} [mm]	$c_{cr,N}$ [mm]	$s_{cr,N}$ [mm]	c_{min} [mm]	s_{min} [mm]
Concrete ≥ C16/20	100	100	85	100	80
Concrete C12/15		140	120	140	110

allfa AUR 10 universal frame anchor

Intended use
Installation parameters, edge distances and spacing in concrete

Annex B 2

Table 5: Minimum member thickness, edge distance and spacing in masonry

Base material		Mz, HLz, KSL, V, Hbl[1)]	KS[1)]
Minimum member thickness[2)]	h_{min} = [mm]	100	100
Single anchor			
Minimum spacing	a_{min} = [mm]	250	250
Minimum edge distance	c_{min} = [mm]	100	150
Anchor group			
Minimum spacing perpendicular to the free edge	$s_{1,min}$ = [mm]	200	300
Minimum spacing parallel to the free edge	$s_{2,min}$ = [mm]	400	600
Minimum edge distance	c_{min} = [mm]	100	150

1) Designations according to Annex C 1 and C 2
2) member thickness according to Annex C 1 – C 4

$a \geq \max(a_{min}, s_{1,min}, s_{2,min})$

Scheme of distance and spacing in concrete and masonry

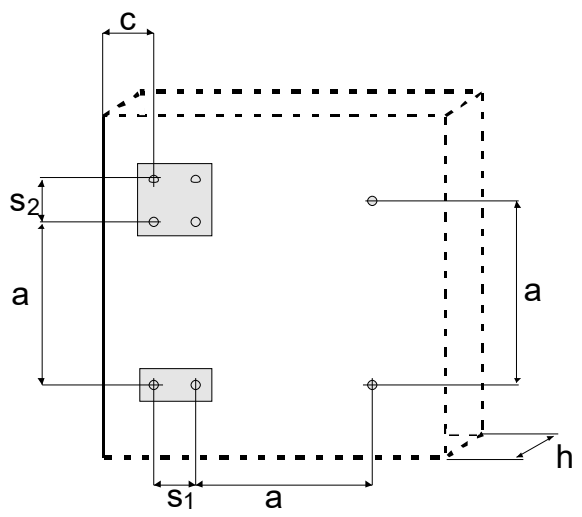

allfa AUR 10 universal frame anchor	Annex B 3
Intended use Installation parameters, edge distances and spacing in masonry	

Installation instructions

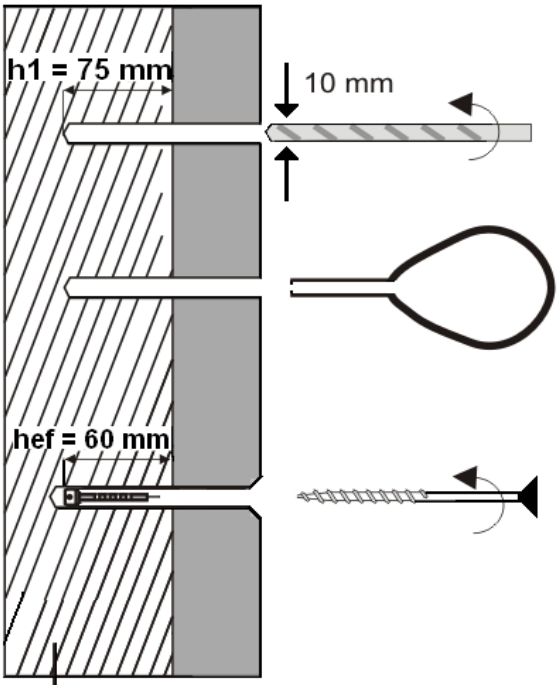

Drill the bore hole perpendicular to the surface of the base material considering the drill method given in Table 9 and 10

Remove dust from the bore hole

Insert the anchor sleeve until the collar is flush with the surface, screw in the special screw (shown with countersunk version)

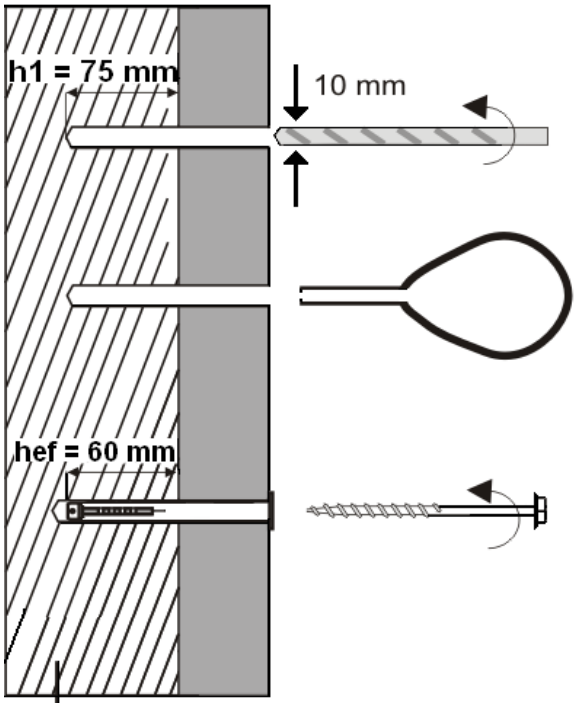

Drill the bore hole perpendicular to the surface of the base material considering the drill method given in Table 9 and 10

Remove dust from the bore hole

Insert the anchor sleeve until the collar is flush with the surface, screw in the special screw (shown with cylindrical head)

allfa AUR 10 universal frame anchor	Annex B 4
Intended use Installation instructions	

Table 6: Characteristic resistance of the screw

Failure of expansion element (special screw)			Galvanized steel
Characteristic tension resistance	$N_{Rk,s}$	[kN]	10,6
Characteristic shear resistance	$V_{Rk,s}$	[kN]	5,3
Characteristic bending resistance	$M_{Rk,s}$	[Nm]	9,2

Table 7: Displacements under tension and shear loading in concrete[1] and masonry

Tension load			Shear load		
F = N [2] [kN]	δ_{NO} [mm]	$\delta_{N\infty}$ [mm]	F = V [2] [kN]	δ_{VO} [mm]	$\delta_{V\infty}$ [mm]
1,8	0,86	1,71	1,8	3,36	5,04

[1] valid for all temperature ranges
[2] intermediate values by linear interpolation

Table 8: Characteristic resistance for pull-out failure for use in concrete

Pull-out failure of the anchor sleeve			**ϑ = 24/40 °C**	**ϑ = 50/80 °C**
• **Concrete ≥ C16/20**				
Characteristic resistance	$N_{Rk,p}$	[kN]	3,0	3,0
• **Concrete C12/15**				
Characteristic resistance	$N_{Rk,p}$	[kN]	2,0	2,0

Table 9: Characteristic resistance in solid masonry

Base material	Min dimensions or min size (L x W xH) [mm]	Bulk density ρ [kg/dm³]	Minimum compressive strength f_b [N/mm²]	Drill method	Characteristic resistance F_{Rk}[1] [kN]	
					24/40 °C	50/80 °C
Clay brick Mz as per EN 771-1:2011+A1:2015	3 DF (240 x 175 x 113)	≥1,8	20	H[2]	3,5	3,5
			10		2,5	2,5
Solid sand/lime bricks KS as per EN 771-2:2011+A1:2015	NF (240 x 115 x 71)	≥2,0	28	D[2]	2,0	2,0
			20		1,5	1,5
			10		1,2	1,2
Lightweight concrete solid blocks V as per EN 771-3:2011+A1:2015	3DF (240 x 175 x 113)	≥1,2	6	D[2]	2,0	2,0
			4		1,5	1,5

[1] characteristic resistance FRK for tension, shear or tension and shear
[2] H = Hammerdrilling, D = Rotary drilling

allfa AUR 10 universal frame anchor

Performances
Characteristic resistance of the screw, displacements
Characteristic resistance in concrete and solid masonry

Annex C 1

Table 10: Characteristic resistance in hollow masonry

Base material	dimensions or size (L x W xH) [mm]	Bulk density ρ [kg/dm³]	Minimum compressive strength f_b [N/mm²]	Drill method	Characteristic resistance F_{Rk} [1)] [kN] 24/40 °C / 50/80 °C
Hollow clay brick HLz as per EN 771-1:2011+A1:2015 e.g. Eder Poro (brick No. 1[3)])	10 DF (249 x 298 x 238)	≥0,72	10	D[2)]	0,4
Hollow clay brick HLz as per EN 771-1:2011+A1:2015 e.g. Danreiter (brick No. 2[3)])	12 DF (376 x 249 x 234)	≥0,76	10	D[2)]	0,6
Hollow clay brick HLz as per EN 771-1:2011+A1:2015 e.g. Eder (brick No. 3[3)])	(246 x 117 x 139)	≥1,09	20	D[2)]	0,9
Hollow clay brick HLz (brick No. 4[3)]) as per EN 771-1:2011+A1:2015	12 DF (300 x 240 x 238)	≥0,7	6	D[2)]	0,3
Hollow clay brick HLz (brick No. 5[3)]) as per EN 771-1:2011+A1:2015	NF (240 x 115 x 71)	≥0,9	12	D[2)]	0,6
			10		0,5
			8		0,4
Hollow sand/lime brick KSL (brick No. 6[3)]) as per EN 771-2:2011+A1:2015	4DF (240 x 115 x 238)	≥1,4	12	D[2)]	1,5
			10		1,2
			8		0,9
Lightweight concrete hollow blocks Hbl (brick No. 7[3)]) as per EN 771-3:2011+A1:2015	12 DF (495 x 175 x 238)	≥1,2	4	D[2)]	1,2

1) characteristic resistance FRK for tension, shear or tension and shear
2) H = Hammerdrilling, D = Rotary drilling
3) refer pictures on Annex C 3 and C 4

Table 11: Values under fire exposure in concrete C20/25 to C50/60 in any load direction, no permanent centric tension load and without lever arm

Base material	Fire resistance class	$F_{Rk,fi,90}$	$\gamma_{M,fi}$ [1)]
C20/25 to C50/60	R 90	≤ 0,8 kN	1,0

1) In absence of other national regulations.

If one-side fire load, see Table 4 for the minimum edge distance c_{min}
In case of fire attack from more than one side c_{min} shall be ≥ 300 mm or ≥ 2 • h_{ef} ; the bigger value is decisive

Table 12: Brick type dimensions and pictures of hollow masonry

Brick No. 1

Hollow clay brick Hlz 10 DF
(249x298x238)

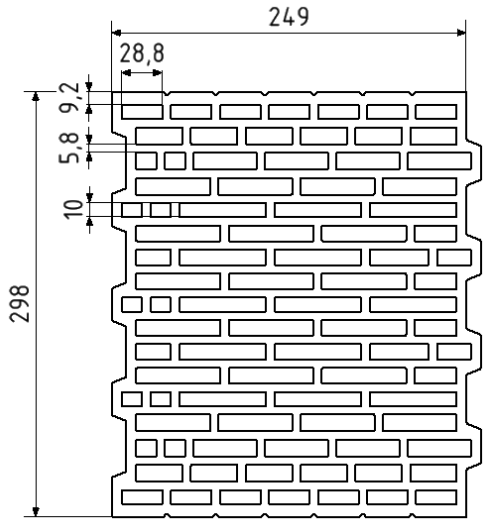

Brick No. 2

Hollow clay brick Hlz 12 DF
(376x249x234)

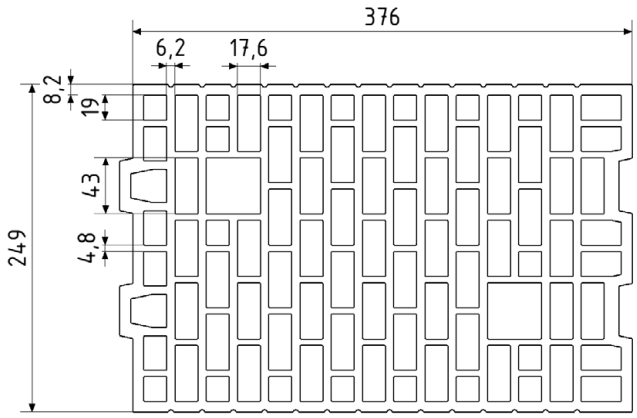

Brick No. 3

Hollow clay brick Hlz
(246x117x139)

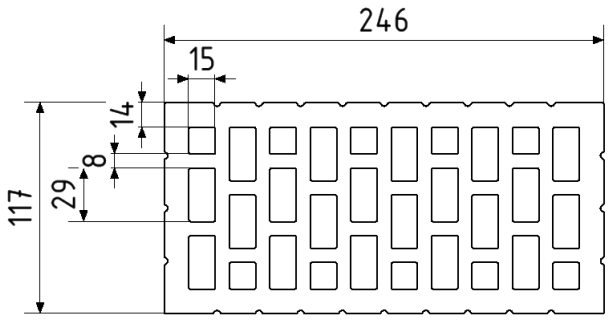

Brick No. 4

Hollow clay brick Hlz12 DF
(380x200x249)

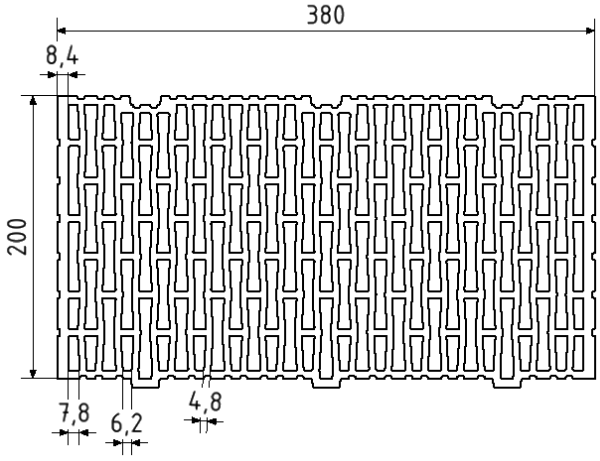

allfa AUR 10 universal frame anchor

Performances
Dimensions and pictures of hollow masonry

Annex C 3

Table 13: Brick type dimensions and pictures of hollow masonry

Brick No. 5

Hollow clay brick NF (240x115x71)

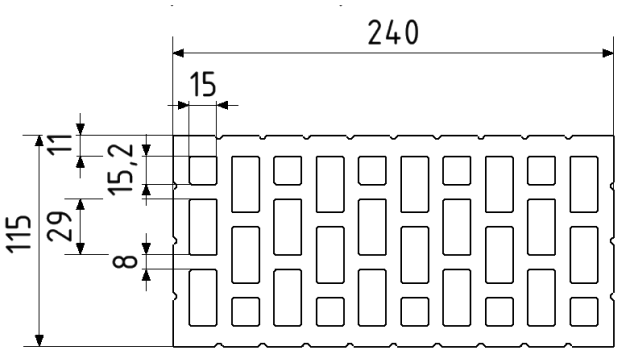

Brick No. 6

Hollow sand/lime brick KSL 4 DF (240x115x238)

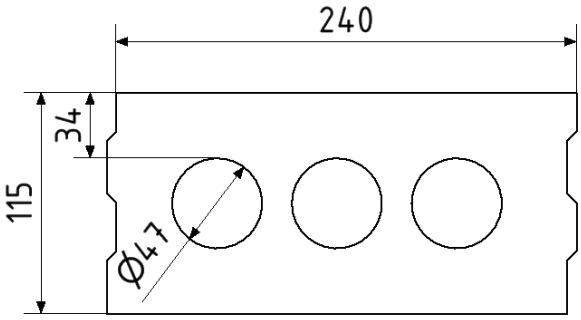

Brick No. 7

Lightweight concrete hollow blocks Hbl 12 DF (495 x 175 x 238)

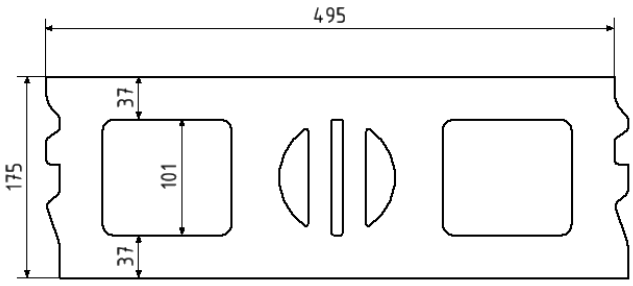

allfa AUR 10 universal frame anchor

Performances
Dimensions and pictures of hollow masonry

Annex C 4