TRACTOR OF THE YEAR
Official Partner

Download the App for free

Tire Book

Technical Manual

Radial

Drive wheels tires

Tractors, combine harvesters and sprayers	TM1000 ProgressiveTraction®	14
	TM1000 High Power	16
	TM900 High Power	21
	TM1060	27
	TM800	31
	TM800 High Speed	41
	TM700 ProgressiveTraction®	45
	TM700	50
	TM700	60
	TM700 High Speed	62
	TM600/TM600 Rice	63
	TM150	80
	TM100	82
	TM190	87
	Marshland	89
	TM300S	91
Combine harvesters	TM3000	92
	TM2000	95

Cross-ply

Drive wheel tires

Rear Tractors	TM90	98

Steered wheels tires

Tractors	TD27	106
	TD300	109

Twin tractor tires

Tractors and harvesting machines	Twin Tractor: T414	112

Radial

Implement tires

Trailers and agricultural machines	Twin Radial	116

Cross-ply

Implement and small tractors tires

Agricultural machines and small tractors	IM110 - IM220	122
	TD27	136

Implement tires

Trailers and agricultural machines	Twin Implement: T404 - T421 - T423 - T478	137
Multi purpose and road transport	Twin Ampt: T421 - T423 - T428 - T440	158
Green area	Twin Garden Tractor: T404	162

Cross-ply

Implement tires standard & standard high speed

Trailers & agricultural machines	AW305 - AF302 - T452 - T306 AW309 Flotation	164
High Speed	Rib Trailer	178

Cross-ply

Forestry tires

Tractors	Agro Forest : T410	180
Forestry harvester, forwarder & skidder	Twin Forestry: T440 SB - T480 SB T428 SB - T421 SB - T414 - T404	184
Skidder	T418	196

Radial

Agro Industrial tires

Telescopic handler, backhoes and compact loaders	TH400 - TH500	200

Cross-ply

Rear tractor industrial tires

Backhoes, compact loaders, skid steer, telehandlers	TB40	206
Excavator, material handling & other machines	Industrial Tractor: T440 EXC - T480 EXC - T459	208

Cross-ply

Light service tires

212

Agriculture, Industry, Grassland, Snow & High Speed from 3” to 15”	DRIVER - GARDENER - T49 - T63 - T94 - T310 T411 - T412 - T413 - T415 - T421 - T430 - T446 T448 - T462 - T463 - T501 - T510 - T513 - T521 T522 - T523 - T528 - T530 - T533 - T536 - T537 T539 - T550 - T559 Turf Grip - T560 ICE - T570 T690 - T991 - HIGH GRIP - TRACTION

Technical informations and practical advices

244

Rims and wheels for light service tires

296

Wheels for agricultural tires

302

Wheels for forestry tires

306

Wheels for excavator tires

307

Radial tires

INCH	SIZE	Tread pattern	Page
Tractors, Combine Harvesters and Sprayers			
16"	210/95R16	TM600	64
	240/70R16	TM700	60
	260/70R16	TM700	60
	280/70R16	TM700	61
18"	210/95R18	TM600	64
	280/70R18	TM700	61
	320/65R18	TM800	31
	340/65R18	TM800	32
20"	280/70R20	TM700	61
	280/85R20	TM600	64
	300/70R20	TM700	50
	320/70R20	TM700	51
	320/85R20	TM600	65
	360/70R20	TM700	51
	380/70R20	TM700	51
	7.50R20	TM190	87
	9.5R20	TM190	87
24"	250/85R24	TM600	65
	280/85R24	TM600	66
	320/70R24	TM700	52
	320/85R24	TM600	66
	340/85R24	TM600	67
	360/70R24	TM700	52
	380/70R24	TM700	52
	380/85R24	TM600	67
	420/70R24	TM700	53
	420/85R24	TM600	68
	440/65R24	TM800	32
	480/65R24	TM800	32
	480/70R24	TM700	53
	540/65R24 **	TM800	33
	540/65R24	TM800	33
	8.3R24	TM190	88
	9.5R24	TM190	88
26"	480/70R26	TM700	53
	540/65R26	TM800	34
28"	280/85R28	TM600	68
	320/70R28	TM700	54
	320/85R28	TM600	69
	340/85R28	TM600 HD	69
	360/70R28	TM700	54
	380/70R28	TM700	54
	380/70R28	TM700 PT	45
	380/85R28	TM600	69
	420/70R28	TM700	55
	420/70R28	TM700 PT	46
	420/85R28	TM600 HD	70
	440/65R28	TM800	34
	480/65R28	TM800	34
	480/70R28	TM700	55
	480/70R28	TM700 PT	46
	520/60R28	TM1060	27
	540/65R28•	TM800	35
	540/65R28	TM800 HS	41
	600/60R28	TM1060	28

** For harvesting applications

• Also in ProgressiveTraction® Version

INCH	SIZE	Tread pattern	Page
28"	600/65R28	TM800	35
	600/65R28	TM800 HS	42
	600/70R28	TM900 HP	21
30"	380/85R30	TM600*	70
	420/70R30	TM700	56
	420/85R30	TM600 HD	71
	420/90R30	TM600	71
	460/85R30	TM600	71
	480/70R30	TM700	56
	480/70R30	TM700 HS	62
	480/70R30	TM700 PT	46
	520/70R30	TM700	56
	520/70R30	TM700 HS	62
	540/65R30	TM800	36
	540/65R30	TM800 HS	42
	600/60R30	TM1060	28
	600/70R30	TM1000 HP	16
	600/70R30	TM900 HP	22
	VF600/70R30	TM1000 PT	14
	710/60R30	TM900 HP	22
32"	230/95R32	TM100	82
	270/95R32	TM100	82
34"	380/85R34	TM600	72
	420/85R34	TM600	72/73
	460/85R34	TM600	73
	480/70R34	TM700	57
	480/70R34	TM700 PT	47
	520/70R34	TM700	57
	540/65R34	TM800	36
	540/65R34	TM800 HS	42
	600/65R34	TM800	36
	600/65R34	TM800 HS	43
	600/70R34	TM900 HP	22
	650/60R34	TM1000 HP	17
	650/60R34	TM900 HP	23
	650/65R34	TM1000 HP	17
	710/55R34	TM900 HP	23
	710/60R34	TM1000 HP	17
	710/60R34	TM900 HP	23
36"	230/95R36	TM100	83
	12.4R36	TM190	88
	13.6R36	TM300S	91
38"	270/95R38	TM100	83
	320/85R38	TM600	73
	340/85R38	TM600	74
	380/80R38	TM600	74
	380/85R38	TM600	74
	380/95R38	TM600*	75
	400/75R38	TM600	75
	420/85R38	TM600	75
	420/85R38	TM600*	76
	460/85R38	TM600 HD	76
	480/70R38	TM700	57
	480/70R38	TM700 PT	47
	480/80R38	TM600*	76
	520/70R38	TM700	58

* In ProgressiveTraction® Version

INCH	SIZE	Tread pattern	Page
38”	520/70R38	TM700 PT	48
	520/85R38	TM600 HD	77
	520/85R38	TM600*	77
	540/65R38	TM800	37
	540/65R38	TM800 HS	43
	580/70R38	TM700	58
	580/70R38	TM700 PT	48
	600/60R38	TM1060	28
	600/65R38	TM800	37
	650/60R38	TM1060	29
	650/65R38	TM1000 HP	18
	650/65R38•	TM800	37/38
	650/65R38	TM800 HS	43/44
	650/75R38	TM900 HP	24
	650/85R38	TM900 HP	24
	710/60R38	TM1000 HP	18
	710/60R38	TM1060	29
	710/70R38	TM800	38
	710/70R38 Sugar Cane	TM800	38
	710/70R38 Forage	TM800	39
	710/70R38	TM800 HS	44
	800/70R38	TM900 HP	24
	VF800/70R38	TM1000 PT	15
	900/60R38	TM900 HP	25
	380/85R38	MARSHLAND	89
	420/85R38	MARSHLAND	89
	460/85R38	MARSHLAND	90
42”	480/80R42	TM600 HD	77
	520/85R42	TM600	78
	580/70R42	TM700	58
	580/70R42	TM700 PT	48
	600/65R42	TM800	39
	620/70R42	TM700	59
	620/70R42	TM700 PT	49
	650/65R42	TM800	39/40
	710/60R42	TM1060	29
	710/70R42	TM1000 HP	18
	710/70R42	TM900 HP	25
	710/70R42 **	TM900 HP	25
	710/70R42 Harvester	TM900 HP	26
	710/75R42	TM1000 HP	19
	710/75R42	TM900 HP	26
	900/60R42	TM1000 HP	19
	900/60R42	TM900 HP	26
44”	210/95R44	TM100	83
	230/95R44	TM100	84
	270/95R44	TM100	84
	750/70R44	TM1060	30
46”	300/95R46	TM100	84
	380/90R46	TM150	80
	380/105R46	TM150	80
	480/80R46	TM150	81
	480/80R46	TM600	78
	520/85R46	TM600	78

INCH	SIZE	Tread pattern	Page
46”	520/85R46	TM150	81
	710/65R46	TM1000 HP	19
	750/75R46	TM1000 HP	20
	900/65R46	TM1000 HP	20
48”	230/95R48	TM100	85
	270/95R48	TM100	85
50”	380/90R50	TM100	85
	380/105R50	TM150	81
	480/80R50	TM150	81
	480/80R50	TM600	79
	480/80R50 Rice	TM600	79
	480/95R50	TM600*	79
52”	300/95R52	TM100	86
54”	380/90R54	TM100	86
Combine harvesters			
25”	1000/50R25	TM3000	92
26”	620/70R26	TM3000	92
	620/75R26	TM2000	95
	750/50R26	TM3000	93
	750/65R26	TM3000	93
32”	1050/50R32	TM3000	94
	650/75R32	TM3000	93
	650/75R32	TM2000	96
	710/75R32	TM2000	96
	800/65R32	TM2000	96
	800/65R32	TM3000	93
	800/70R32	TM3000	94
	900/60R32	TM2000	97
	900/65R32	TM3000	94
38”	800/70R38	TM3000	94
Trailers and agricultural machines			
22.5”	500/60R22.5	TWIN RADIAL	117
	560/60R22.5	TWIN RADIAL	117
	580/65R22.5	TWIN RADIAL	118
	600/50R22.5	TWIN RADIAL	118
26.5”	600/55R26.5	TWIN RADIAL	119
	680/55R26.5	TWIN RADIAL	119
	710/50R26.5	TWIN RADIAL	120
30.5”	650/65R30.5	TWIN RADIAL	120
	750/60R30.5	TWIN RADIAL	120
	850/50R30.5	TWIN RADIAL	121
32”	800/60R32	TWIN RADIAL	121
Telescopic handlers, backhoes and compact loaders			
16”	11R16	TH400	200
18”	340/80R18	TH400	200
	400/70R18	TH400	202
20”	400/70R20	TH400	202
24”	400/70R24	TH400	202
	440/80R24	TH400	202
	460/70R24	TH400	202
	460/70R24	TH500	204
	500/70R24	TH400	204
26”	480/80R26	TH400	204
28”	440/80R28	TH400	204

* In ProgressiveTraction® Version

** For harvesting applications

• Also in ProgressiveTraction® Version

Cross-Ply tires

INCH	SIZE	Tread pattern	Page
Tractors			
24”	8.3-24	TM90	98
	9.5-24	TM90	99
	11.2-24	TM90	99
	12.4-24	TM90	99
	13.6-24	TM90	100
	14.9-24	TM90	100
	16.9-24	TM90	100
26”	14.9-26	TM90	101
	16.9-26 Harvester	TM90	101
28”	13.6-28	TM90	101
	14.9-28	TM90	102
	16.9-28	TM90	102
30”	14.9-30	TM90	102
	16.9-30	TM90	103
	18.4-30	TM90	103
34”	16.9-34	TM90	103
	18.4-34	TM90	104
36”	12.4-36	TM90	104
38”	15.5-38	TM90	104
	16.9-38	TM90	105
	18.4-38	TM90	105
	20.8-38	TM90	105
Front Tractors			
15”	4.00-15	TD27	106
	5.00-15	TD27	106
	9.5L-15	TD300	109
16”	5.50-16	TD27	107
	6.00-16	TD27	107
	6.50-16	TD27	107
	7.50-16	TD27	108
	7.50-16	TD300	110
	9.00-16	TD300	110
	10.00-16	TD300	110
18”	7.50-18	TD300	111
Tractors and harvesting machines			
17.5”	400/55-17.5	T414	112
26.5”	600/55-26.5	T414	112
30.5”	600/55-30.5	T414	112
	600/60-30.5	T414	112
	800/55-30.5	T414	114
38”	710/65-38	T414	114
	850/50-38	T414	114
	850/60-38	T414	114
42”	850/55-42	T414	114
Agricultural machines and small tractors			
10”	5.00-10	IM110	122
12”	6.5/80-12	IM110	124
	10.0/80-12	IM110	124
	4.00-12	IM110	122
	5.00-12	IM110	124
	7.00-12	IM110	124

INCH	SIZE	Tread pattern	Page
14”	5.00-14	IM110	126
15”	7.5L-15	IM110	126
	6.5/80-15	IM110	126
	5.00-15	IM110	126
15.3”	10.0/75-15.3	IM110	128
16”	9.0/75-16	IM110	130
	250/80-16	IM110	130
	6.00-16	IM110	128
	6.50-16	IM110	128
	7.50-16	IM110	130
	8.25-16	IM110	130
18”	250/80-18	IM110	132
	7.50-18	IM110	132
19”	4.50-19	IM110	132
20”	210/95-20	IM220	134
21”	4.00/4.50-21	TD27	136
	4.00-21	IM110	132
Trailers & agricultural machines - Twin Implement			
15.5”	280/60-15.5	T421	138
	280/60-15.5	T478	138
	400/45-15.5	T423	138
	400/60-15.5	T404	140
	400/60-15.5	T478	140
17”	420/55-17	T421	140
17.5”	400/55-17.5	T404	142
22.5”	400/55-22.5	T404	142
	500/45-22.5	T404	142
	500/60-22.5	T404	142
	500/60-22.5	T421	144
	560/45-22.5	T404	144
	560/60-22.5	T404	144
	600/50-22.5	T404	146
	600/50-22.5	T423	146
	710/40-22.5	T404	148
26.5”	400/60-26.5	T404	148
	500/60-26.5	T421	148
	600/55-26.5	T404	148
	600/55-26.5	T421	150
	710/45-26.5	T404	150
	710/45-26.5	T423	150
	800/40-26.5	T404	152
	800/40-26.5	T423	152
30.5”	600/60-30.5	T421	152
	650/65-30.5	T404	152
	710/50-30.5	T404	154
	710/50-30.5	T423	154
	750/60-30.5	T404	154
	800/45-30.5	T404	154
	800/45-30.5	T423	156
	850/50-30.5	T404	156

INCH	SIZE	Tread pattern	Page
Multi purpose and road transport - Twin Ampt			
22.5”	620/50B-22.5	T423	158
	650/45B-22.5	T440	158
	710/40B-22.5	T423	158
26.5”	620/55B-26.5	T421	160
30.5”	650/55B-30.5	T428	160
	750/50B-30.5	T428	160
	850/45B-30.5	T423	160
Green area - Twin Garden Tractor			
17.5”	400/55-17.5	T404	162
22.5”	400/55-22.5	T404	162
30.5”	600/60-30.5	T404	162
Trailers & agricultural machines – Implement Standard			
12”	200/95-12	AF302	164
	10.0/80-12	AW305	176
13”	260/90-13	AF302	166
15.3”	260/70-15.3	AW305	166
	300/80-15.3	AW305	168
	300/80-15.3	T452	168
	320/80-15.3	AW305	168
16”	180/90-16	AF302	170
	190/90-16	AF302	170
	200/90-16	AF302	170
	210/95-16	AF302	170
	260/70-16	AW305	172
	340/55-16	AW305	172
	340/55-16	AW309	172
	360/65-16	AW305	172
	360/70-16	AW305	174
17”	380/55-17	AW305	174
	420/55-17	T452	174
	480/45-17	AW305	174
	500/50-17	AW309	176
	520/50-17	T306	176
	555/45-17	RT HS	178
Tractors - Agro Forest			
24”	320/85-24	T410	180
	380/85-24	T410	180
28”	380/85-28	T410	180
	420/85-28	T410	180
30”	460/85-30	T410	182
34”	420/85-34	T410	182
	460/85-34	T410	182
38”	420/85-38	T410	182
	460/85-38	T410	182
	520/85-38	T410	182

INCH	SIZE	Tread pattern	Page
Forestry havester, fowarder & skidder - Twin Forestry			
22.5”	500/45-22.5	T404	194
	500/60-22.5	T421 SB	194
	600/50-22.5 LS2	T480 SB	186
	650/45-22.5 LS2	T440 SB	186
	710/40-22.5 LS2	T480 SB	186
24.5”	710/40-24.5 LS2	T440 SB	186
	710/40-24.5 LS2	T480 SB	186
26.5”	600/55-26.5 LS2	T440 SB	188
	600/55-26.5 LS2	T480 SB	188
	710/45-26.5 LS2	T440 SB	188
	710/45-26.5 LS2	T480 SB	188
	750/55-26.5 LS2	T440 SB	190
	750/55-26.5 LS2	T480 SB	190
	800/40-26.5 LS2	T440 SB	190
	800/40-26.5 LS2	T480 SB	190
28.5”	780/50-28.5 LS2	T480 SB	190
30.5”	600/60-30.5	T414	192
	710/50-30.5 LS2	T428 SB	192
	750/45-30.5 LS2	T428 SB	192
34”	600/65-34 LS2	T440 SB	192
	710/55-34 LS2	T440 SB	192
Forestry Skidder			
26”	23.1-26	T418 SB	196
	28L-26	T418 SB	196
	28L-26	T418 FS	196
32”	24.5-32	T418 SB	198
	30.5L-32	T418 SB	198
	DH 35.5L-32	T418 SB	198
Backhoes, compact loaders, skid steer, telehandlers			
18”	320/80-18	TB40	206
	340/80-18	TB40	206
28”	440/80-28	TB40	206
Excavator, material handling & other machines			
22.5”	600/50-22.5	T480 EXC	208
	650/45-22.5	T440 EXC	208
	710/40-22.5 LS2	T480 EXC	210
34”	600/65-34	T440 LD SB	210
	620/60B-34	T459	210

Light Service tires

INCH	SIZE	PR/LI	Tread pattern	Page
Agriculture, Industry, Grassland, Snow & High Speed				
4”	3.00-4	4	T991	214
	3.00-4	6	T991	214
	3.00-4	6	T530	214
	4.00-4	6	T991	215
	4.10-4	4	T510	215
	4.10/3.50-4	6	T539	215
	11x4.00-4	2	T537S TL	215
	100/100-4	60A8 48A8	T539	216
6”	3.50-6	4	T510	216
	100/85-6	46	T513	219
	4.10/3.50-6	57J	T533 HS	217
	4.00-6	6	T991	216
	13x5.00-6	4	T539 TL	217
	13x5.00-6	6	T539 TL	217
	13x5.00-6	4	T510 TL	218
	13x5.00-6	6	T510	218
	13x5.00-6	2	GARDENER	217
	15x6.00-6	4	T510 TL	219
	15x6.00-6	6	T510 TT	219
	15x6.00-6	4	T539 Grip TL	218
	15x6.00-6	2	GARDENER TL	218
	100/65-6	24A8	T539 Grip TL	219
	140-6	6	T539	220
	140-6	6	T510	220
	140-6	10	T510	221
8”	3.00-8	2	T539 Grey	221
	3.50-8	4	T510	221
	3.50-8	4	T513	221
	3.50-8	56J	T501 HS	221
	4.00-8	4	T63	221
	4.00-8	4	T510	221
	4.00-8	4	T991	221
	4.00-8	4	T513	221
	4.00-8	6	T991	221
	4.00-8	6	T522	221
	4.00-8	8	T523	222
	4.00-8	71J	T49 HS	222
	5.00-8	6	T522	222
	16x6.50-8	4	T539 Grip TL	222
	16x6.50-8	6	T539	222
	16x6.50-8	73A8	T510	222
	16x6.50-8	73A8	T310	222
	16x6.50-8	84A8 80B	T510	223
	16x6.50-8	2/49A6	GARDENER TL	223
	16x6.50-8	84	T310	224
	16.5x6.50-8	64J	T539 HS TL	223
	16.5x6.50-8	72J	T539 HS TL	224

INCH	SIZE	PR/LI	Tread pattern	Page
8”	16x7.50-8	4	T537 TL	224
	16x7.50-8	4 70A6	T539 TL	224
	18x7.50-8	2	T539 TL	225
	18x8.50-8	4	T539 TL	225
	18x8.50-8	6	T539	225
	18x8.50-8	6	T510	225
	18x8.50-8	8	T570 TL	226
	18x8.50-8	8	T415 TL	225
	18x8.50-8	2/58A6	GARDENER TL	225
	18x9.50-8	4	T521 GT TL	226
	18x9.50-8	4/82A6	DRIVER TL	226
	20x8.00-8	4	T539 TL	226
	20x10.00-8	2	GARDENER	226
	20x10.00-8	6	T539	227
	170/60-8	47A8 35A8	HIGH GRIP TL	227
	190-8	8	T537	227
	200/65-8	59A8 47A8	HIGH GRIP TL	228
	210/60-8	83A8	T415 TL	229
	220/45-8	70A8 58A8	T510	228
	220/45-8	70A8 58A8	T310	228
	220/60-8	74A8 62A8	T463 Plus TL	229
	220/60-8	83	T510	229
9”	6.00-9	6	T522	230
	6.00-9	10	T991	230
	6.00-9	99J	T523 HS	230
10”	4.40-10	62J	T690 HS	230
	5.0-10	8	T462 TL	231
	7.50-10	12	T991	231
	7.50-10	14	T523 TL	231
	18x8.50-10	8	T570 TL	231
	20x8.00-10	4	T539 GT TL	232
	20x8.00-10	6	T539 TL	232
	20x8.00-10	8	T570 TL	232
	20x10.00-10	6	T539 TL	232
	20.5x8.00-10	10	T539 TL	232
	110/100-10	84A8 72A8	T560 ICE TL	232
	200/55-10	95A8	T430 TL	233
	250/50-10	79A8 67A8	HIGH GRIP TL	233
12”	6-12	4	T63 TL	233
	10.0/75-12	10	T446 TL	233
	23x8.50-12	4	T463 TL	233
	23x8.50-12	104	T463 TL	234

INCH	SIZE	PR/LI	Tread pattern	Page
12"	23x8.50-12	6	T550 TL	234
	23x8.50-12	10	T539	234
	23x8.50-12	10	T539 Grey	235
	23x10.50-12	4	T463 TL	235
	23x10.50-12	10	T463 TL	235
	23x10.50-12	4	T539 TL	236
	23x10.50-12	6	T539 TL	236
	23x10.50-12	6	T539 Grey TL	236
	23x10.50-12	4/91A6	DRIVER TL	236
	23x10.50-12	6/100A6	DRIVER TL	237
	23x12.50-12	6	T539 TL	237
	26x12.00-12	4	T539 TL	237
	26x12.00-12	8	T539 TL	238
	26x12.00-12	8	T539 TT	238
	26x12.00-12	4	T411 TL	238
	26x12.00-12	4	T463 TL	238
	26x12.00-12	8	T463 TL	239
	220/60-12 (23x8.50-12)	88A8 76A8	T539 Soft Grip TL	239
	300/65-12	118A8	T446 TL	239
	320/60-12	132A8	T421 TT/TL	239
	320/60-12	132A8	T421 Grey TL	240
	560x140-12	100	T528	240
13"	23x5 (23x5.00-13)	10	T94 TL	240
	610x145-13	112	T528	240
14"	645x160-14	120	T528	240
14.5"	200/60-14.5	10	T448 Extra	240
	200/60-14.5	10	T536	240
15"	7.00-15	6	TRACTION	241
	11L-15	12	T510 TL	241
	29x12.50-15	4	T411	241
	29x13.50-15	4	T411	241
	31x15.50-15	8	T412 TL	241
	33x12.50-15	6	T413 TL	241
	33x15.50-15	6	T412 TL	241
	33x15.50-15	8	T412 TL	241
	320/70-15	122	T539	242
	320/55-15	123A8	T559 Turf Grip	242
	320/55-15	133A8 121A8	T421 TL	242
	380/60-15	114A8	T539 Soft Grip TL	243
	400/50-15	135A8	T463 TL	243
	690x180-15	100A8	TRACTION	243

Trelleborg Wheel Systems, part of Trelleborg Group, is a leading global supplier of tires and complete wheels for agricultural and forestry machines, materials handling, construction vehicles, motorcycles, bicycle and other specialty segments. It offers highly specialized solutions to create added value for customers and it's partner of the leading Original Equipment Manufacturers. Its manufacturing facilities are located in Italy, Latvia, Brazil, Czech Republic, Serbia, Slovenia, China, Sri Lanka and U.S.

www.trelleborg.com/wheels

Trelleborg is a world leader in engineered polymer solutions that seal, damp and protect critical applications in demanding environments. Its innovative solutions accelerate performance for customers in a sustainable way. The Trelleborg Group has annual sales of about SEK 34 billion (EUR 3.32 billion, USD 3.92 billion) and operations in about 50 countries. The Group comprises five business areas: Trelleborg Coated Systems, Trelleborg Industrial Solutions, Trelleborg Offshore & Construction, Trelleborg Sealing Solutions and Trelleborg Wheel Systems. The Trelleborg share has been listed on the Stock Exchange since 1964 and is listed on Nasdaq Stockholm, Large Cap.

www.trelleborg.com

Range and applications

	Range	TM1000 Progressive Traction®	TM1000 High Power	TM900 High Power	TM1060	TM800	TM800 High Speed	TM700 Progressive Traction®	TM700	TM700 High Speed	TM600	TM150	TM100	
	HP (for FWD tractor single fitment)	270-450	270-450	250-400	80-300	80-260	120-260	100-240	40-240	120-180	50-180			
	HP (for Articulated 4WD single fitment)	400-600	400-600	350-550	80-320									
	Max Speed (Km/h)	70	65	70	70	65	70	65	50-65	70	50	65	40	
	Construction	Radial	Radial	Radial	Radial	Radial	Radial	Radial	Radial	Radial	Radial	Radial	Radial	
TRACTOR SERVICE	Field application (High torque value)	●	●	●	●	●	❍	●	●	❍	●			
TRACTOR SERVICE	Field application (Medium torque value)	●	●	●	●	●	❍	●	●	❍	●			
TRACTOR SERVICE	Field-bed preparation (Low torque value)	●	●	●	●	●	❍	●	●	❍	❍			
TRACTOR SERVICE	Transport on road (High speed)	●	●	●	●	●	●	●		●				
TRACTOR SERVICE	Transport on road (Max 50 Km/h)	●	●	●	●	●	●	●	❍	●	❍			
TRACTOR SERVICE	High load on front axels	●	●	●	●		●			●				
TRACTOR SERVICE	IF - High Flexion Technology (✳)		●											
TRACTOR SERVICE	VF - Very High Flexion Technology (✳ ✳)	●			●							●		
TRACTOR SERVICE	Orchard – Vineyard								●		❍			
TRACTOR SERVICE	Water-logged and Marshy terrain													
TRACTOR SERVICE	Row Crop Cultivation										❍	●	●	
TRACTOR SERVICE	Grassland													
IMPLEMENT SERVICE	Harvesting													
IMPLEMENT SERVICE	Forestry													
IMPLEMENT SERVICE	Self Propelled Machine													
IMPLEMENT SERVICE	Trailer on Road													
IMPLEMENT SERVICE	Trailer on Field													
IMPLEMENT SERVICE	Implement Machine													
AGRO - INDUSTRIAL	<u>Farm Service</u> Telehandler Backhoe Loader Compact Wheel Loader													
AGRO - INDUSTRIAL	<u>Construction Service</u> Telehandler Backhoe Loader Compact Wheel Loader													

● Suggested - ❍ Permitted

✳ IF Improved Flexion = up to 20% more load at the same pressure versus standard technology

✳✳ VF Very High Flexion = up to 40% more load at the same pressure versus standard technology

HP Range = refers to nominal rims

	TM190	Marshland	TM3000	TM2000	Twin Radial	TM90	Twin Tractor	Twin Implement	Twin AMPT	Twin Forestry	Agro Forest	Implement Standard	Light Service	TH400 Agroindustrial	TB40 Backhoe
	30-80					25-160*	150-310				80-200				
							350-450								
	50	50	40	40	70	40	50	50	70	40	50	50	40-70	50	40
	Radial	Radial	Radial	Radial	Radial	Radial	Cross-Ply	Cross-Ply	Cross-Ply	Cross-Ply	Cross-Ply	Cross-Ply	Cross-Ply	Radial	Cross-Ply
	●		❍	❍		●	●				●				
	●		❍	❍		●	●				●				
	●		❍	❍		❍	●				❍				
	❍					❍									
							●								
			●												
						❍							●		
		●													
	❍					❍									
	●				●			●					●		
			●	●			●	❍							
										●	❍				
			❍	❍	●			●	●	●	❍				
					●			❍	●			❍	❍		
			❍		●			●	●			●	●		
					●			●	●			●	●		
														●	❍
														❍	●

* For 180 hp tractors please contact Trelleborg

TM1000 ProgressiveTraction®

Trelleborg is modernizing its leading tire line, the TM1000, enriching the tread with ProgressiveTraction® technology, which has won numerous innovation awards around the world and has brought great improvements to the market. The new TM1000 ProgressiveTraction® , designed in compliance with VF regulations, is an innovative tire capable of providing superior load capacity, reducing soil compaction, while providing unbeatable traction. On the road, the new range guarantees high performance, increasing machine productivity.

SIZE	
VF 600/70R30 TL	170D (167E)
IN PREPARATION VF 420/85R34 TL	154D
IN PREPARATION VF 650/60R34 TL	168D (165E)
VF 800/70R38 TL	184D

SIZE	
IN PREPARATION VF 650/85R42 TL	183D (180E)
VF 710/70R42 TL	182D (179E)
IN PREPARATION VF 480/80R50 TL	166D

SIZE	Tread pattern	SW mm	OD mm	SLR mm	RC mm	SRI	Rim	Permitted Rims	Type	Tube
VF 600/70R30 170D (167E)	TM1000 ProgressiveTraction®	615	1600	695	4785	750	DW21B	DW20B	TUBELESS	

PRESSURE											
psi	6	9	12	14	17	20	23	26	29	32	35
bar	0,4	0,6	0,8	1,0	1,2	1,4	1,6	1,8	2,0	2,2	2,4
MAX. LOAD kg											
70 S				3385	3820	4260	4695	4915	5130	5295	5450
40 to 65 S				3720	4200	4680	5160	5400	5640	5820	**6000**
30 S			3305	3795	4285	4775	5265	5510	5755	5935	6120
20 S		2935	3370	3870	4370	4865	5365	5615	5865	6055	6240
10 LT (*)	2585	3100	3565	4090	4620	5150	5675	5940	6205	6400	6600
10 HT (**)		2875	3305	3795	4285	4775	5265	5510	5755	5935	6120

Design data = the dimensions of size in design data are calculated dimensions and not measured data on the normal production tire

SIZE	Tread pattern	SW mm	OD mm	SLR mm	RC mm	SRI	Rim	Permitted Rims	Type	Tube
VF 800/70R38 184D	**TM1000** ProgressiveTraction®	830	2078	860	6200	975	DW27B	DW25B	TUBELESS	

PRESSURE								
psi	**6**	**9**	**12**	**14**	**17**	**20**	**23**
bar	**0,4**	**0,6**	**0,8**	**1,0**	**1,2**	**1,4**	**1,6**
MAX. LOAD kg							
40 to 65 S				6570	7380	8190	**9000**
30 S			5875	6700	7530	8355	9180
20 S		5150	5990	6835	7675	8520	9360
10 LT (*)	4540	5445	6335	7225	8120	9010	9900
10 HT (**)		5050	5875	6700	7530	8355	9180

SIZE	Tread pattern	SW mm	OD mm	SLR mm	RC mm	SRI	Rim	Permitted Rims	Type	Tube
VF 710/70R42 182D (179E)	**TM1000** ProgressiveTraction®	730	2060		6190	975	DW25B	DW23B	TUBELESS	

PRESSURE									
psi	**6**	**9**	**12**	**14**	**17**	**20**	**23**	**26**	**29**
bar	**0,4**	**0,6**	**0,8**	**1,0**	**1,2**	**1,4**	**1,6**	**1,8**	**2,0**
MAX. LOAD kg									
70 S				5105	5800	6420	7040	7385	7750
40 to 65 S				5610	6375	7055	7735	8120	**8500**
30 S			5030	5720	6505	7195	7890	8280	8670
20 S		4420	5125	5835	6630	7335	8045	8440	8840
10 LT (*)	3895	4675	5425	6170	7015	7760	8510	8930	9350
10 HT (**)		4335	5030	5720	6505	7195	7890	8280	8670

Design data = the dimensions of size in design data are calculated dimensions and not measured data on the normal production tire

For technical notes about pressure tables please refer to page 244.

TM1000 HIGH POWER

Designed using Trelleborg BLUE TIRE Technology, the TM1000 High Power redefines standards within the agricultural industry.
Constant and smooth torque transfer in the field, unbeatable traction in the furrow, low rolling resistance and a very long life on the road, come together to make TM1000 High Power the most efficient solution for Ultra High Powered tractors.

The carcass, engineered with BLUE TIRE Technology, ensures premium farming productivity by providing an extra wide foot-print and low soil compaction.
Developed to fully respect the environment, the TM1000 High Power is the perfect solution for sustainable farming.

SIZE	
IF 600/70R30	159D
IF 650/60R34	159D
IF 650/65R34	161D
IF 710/60R34	164D
IF 650/65R38	169D
IF 710/60R38	172D

SIZE	
IF 710/70R42	179D
IF 710/75R42	176D
IF 900/60R42 NRO	180D
IF 710/65R46	183D
IF 750/75R46	186D
IF 900/65R46	190D

SIZE	Tread pattern	SW mm	OD mm	SLR mm	RC mm	SRI	Rim	Permitted Rims	Type	Tube
IF 600/70R30 159D	TM1000 HP	605	1610	695	4750	750	DW21B	DW20B	TUBELESS	

PRESSURE									
psi	6	9	12	14	17	20	23	26	28
bar	0,4	0,6	0,8	1,0	1,2	1,4	1,6	1,8	1,9
MAX. LOAD kg									
40 to 65 S			2800	3195	3590	3985	**4375**		
30 S			2910	3320	3730	4140	4550		
20 S			3025	3450	3875	4300	4725		
10 LT (*)	2335	2790	3250	3705	4160	4620	5075	5380	5555
10 HT			2910	3320	3730	4140	4550		

SIZE	Tread pattern	SW mm	OD mm	SLR mm	RC mm	SRI	Rim	Permitted Rims	Type	Tube
IF 650/60R34 159D	**TM1000 HP**	645	1660	725	4955	775	DW23B		TUBELESS	

PRESSURE									
psi	**6**	**9**	**12**	**14**	**17**	**20**	**23**	**26**	**28**
bar	**0,4**	**0,6**	**0,8**	**1,0**	**1,2**	**1,4**	**1,6**	**1,8**	**1,9**
MAX. LOAD kg									
40 to 65 S			2800	3195	3590	3985	**4375**		
30 S			2910	3320	3730	4140	4550		
20 S			3025	3450	3875	4300	4725		
10 LT (*)	2335	2790	3250	3705	4160	4620	5075	5380	5555
10 HT			2910	3320	3730	4140	4550		

SIZE	Tread pattern	SW mm	OD mm	SLR mm	RC mm	SRI	Rim	Permitted Rims	Type	Tube
IF 650/65R34 161D	**TM1000 HP**	650	1720	750	5105	825	DW23B		TUBELESS	

PRESSURE									
psi	**6**	**9**	**12**	**14**	**17**	**20**	**23**	**26**	**28**
bar	**0,4**	**0,6**	**0,8**	**1,0**	**1,2**	**1,4**	**1,6**	**1,8**	**1,9**
MAX. LOAD kg									
40 to 65 S			3055	3470	3885	4255	**4625**		
30 S			3175	3610	4040	4425	4810		
20 S			3295	3745	4195	4595	4995		
10 LT (*)	2470	3005	3540	4025	4505	4935	5365	5690	5875
10 HT			3175	3610	4040	4425	4810		

SIZE	Tread pattern	SW mm	OD mm	SLR mm	RC mm	SRI	Rim	Permitted Rims	Type	Tube
IF 710/60R34 164D	**TM1000 HP**	710	1715	740	5105	825	DW25B		TUBELESS	

PRESSURE									
psi	**6**	**9**	**12**	**14**	**17**	**20**	**23**	**26**	**28**
bar	**0,4**	**0,6**	**0,8**	**1,0**	**1,2**	**1,4**	**1,6**	**1,8**	**1,9**
MAX. LOAD kg									
40 to 65 S			3200	3650	4100	4550	**5000**		
30 S			3330	3795	4265	4730	5200		
20 S			3455	3940	4430	4915	5400		
10 LT (*)	2670	3190	3710	4235	4755	5280	5800	6150	6350
10 HT			3330	3795	4265	4730	5200		

SIZE	Tread pattern	SW mm	OD mm	SLR mm	RC mm	SRI	Rim	Permitted Rims	Type	Tube
IF 650/65R38 169D	**TM1000 HP**	660	1840	830	5510	875	DW23B		TUBELESS	

PRESSURE														
psi	**6**	**9**	**12**	**14**	**17**	**20**	**23**	**26**	**29**	**32**	**35**	**38**	**41**
bar	**0,4**	**0,6**	**0,8**	**1,0**	**1,2**	**1,4**	**1,6**	**1,8**	**2,0**	**2,2**	**2,4**	**2,6**	**2,8**
MAX. LOAD kg													
40 to 65 S			3190	3655	4060	4470	4815	5105	5395	5600	**5800**		
30 S			3320	3800	4220	4645	5005	5310	5610	5820	6030		
20 S			3445	3945	4385	4825	5200	5510	5825	6045	6265		
10 LT (*)	2625	3160	3700	4240	4710	5180	5585	5920	6255	6495	6730	7020	7365
10 HT			3320	3800	4220	4645	5005	5310	5610	5820	6030		

SIZE	Tread pattern	SW mm	OD mm	SLR mm	RC mm	SRI	Rim	Permitted Rims	Type	Tube
IF 710/60R38 172D	**TM1000 HP**	720	1840	825	5515	875	DW25B		TUBELESS	

PRESSURE														
psi	**6**	**9**	**12**	**14**	**17**	**20**	**23**	**26**	**29**	**32**	**35**	**38**	**41**
bar	**0,4**	**0,6**	**0,8**	**1,0**	**1,2**	**1,4**	**1,6**	**1,8**	**2,0**	**2,2**	**2,4**	**2,6**	**2,8**
MAX. LOAD kg													
40 to 65 S			3340	3845	4285	4790	5230	5515	5800	6050	**6300**		
30 S			3475	3995	4455	4980	5440	5765	6095	6290	6550		
20 S			3605	4150	4625	5170	5645	5990	6330	6530	6805		
10 LT (*)	2775	3360	3875	4460	4970	5555	6065	6430	6795	7015	7310	7625	8000
10 HT			3475	3995	4455	4980	5440	5765	6095	6290	6550		

SIZE	Tread pattern	SW mm	OD mm	SLR mm	RC mm	SRI	Rim	Permitted Rims	Type	Tube
IF 710/70R42 179D	**TM1000 HP**	735	2060	920	6190	975	DW25B		TUBELESS	

PRESSURE														
psi	**6**	**9**	**12**	**14**	**17**	**20**	**23**	**26**	**29**	**32**	**35**	**38**	**41**
bar	**0,4**	**0,6**	**0,8**	**1,0**	**1,2**	**1,4**	**1,6**	**1,8**	**2,0**	**2,2**	**2,4**	**2,6**	**2,8**
MAX. LOAD kg													
40 to 65 S			4185	4805	5425	6045	6665	6940	7210	7480	**7750**		
30 S			4350	4995	5640	6285	6930	7255	7575	7820	8060		
20 S			4520	5190	5860	6530	7200	7535	7870	8120	8370		
10 LT (*)	3595	4225	4855	5575	6295	7010	7730	8090	8450	8720	8990	9380	9845
10 HT			4350	4995	5640	6285	6930	7255	7575	7820	8060		

SIZE	Tread pattern	SW mm	OD mm	SLR mm	RC mm	SRI	Rim	Permitted Rims	Type	Tube
IF 710/75R42 176D	**TM1000 HP**	730	2160	940	6410	1025	DW25B	DW23B	TUBELESS	

PRESSURE									
psi	**6**	**9**	**12**	**14**	**17**	**20**	**23**	**26**	**28**
bar	**0,4**	**0,6**	**0,8**	**1,0**	**1,2**	**1,4**	**1,6**	**1,8**	**1,9**
MAX. LOAD kg									
40 to 65 S			4545	5185	5825	6465	**7100**		
30 S			4725	5390	6055	6720	7385		
20 S			4910	5600	6290	6980	7670		
10 LT (*)	3790	4530	5270	6010	6755	7495	8235	8735	9015
10 HT			4725	5390	6055	6720	7385		

SIZE	Tread pattern	SW mm	OD mm	SLR mm	RC mm	SRI	Rim	Permitted Rims	Type	Tube
IF 900/60R42 NRO 180D	**TM1000 HP**	880	2155	945	6425	1025	DW30B	DW28B	TUBELESS	

PRESSURE									
psi	**6**	**9**	**12**	**14**	**17**	**20**	**23**	**26**	**28**
bar	**0,4**	**0,6**	**0,8**	**1,0**	**1,2**	**1,4**	**1,6**	**1,8**	**1,9**
MAX. LOAD kg									
40 to 65 S			5120	5840	6560	7280	**8000**		
30 S			5325	6075	6820	7570	8320		
20 S			5530	6305	7085	7860	8640		
10 LT (*)	4270	5105	5940	6775	7610	8445	9280	9840	10160
10 HT			5325	6075	6820	7570	8320		

SIZE	Tread pattern	SW mm	OD mm	SLR mm	RC mm	SRI	Rim	Permitted Rims	Type	Tube
IF 710/65R46 183D	**TM1000 HP**	710	2090	947	6325	1025	DW25B		TUBELESS	

PRESSURE													
psi	**6**	**9**	**12**	**14**	**17**	**20**	**23**	**29**	**35**	**41**	**46**	**49**	**54**
bar	**0,4**	**0,6**	**0,8**	**1,0**	**1,2**	**1,4**	**1,6**	**2,0**	**2,4**	**2,8**	**3,2**	**3,4**	**3,7**
MAX. LOAD kg													
40 to 65 S			4025	4640	5250	5690	6215	6915	7440	8140	**8750**		
30 S			4185	4825	5460	5915	6460	7190	7735	8465	9100		
20 S			4345	5010	5670	6145	6710	7465	8035	8790	9450		
10 LT (*)	3450	4060	4670	5380	6090	6600	7205	8020	8630	9440	10150	10500	11115
10 HT			4185	4825	5460	5915	6460	7190	7735	8465	9100		

SIZE	Tread pattern	SW mm	OD mm	SLR mm	RC mm	SRI	Rim	Permitted Rims	Type	Tube
IF 750/75R46 186D	**TM1000 HP**	750	2305	1030	6915	1125	DW25B		TUBELESS	

PRESSURE														
psi	**6**	**9**	**12**	**14**	**17**	**20**	**23**	**26**	**29**	**32**	**35**	**38**	**41**
bar	**0,4**	**0,6**	**0,8**	**1,0**	**1,2**	**1,4**	**1,6**	**1,8**	**2,0**	**2,2**	**2,4**	**2,6**	**2,8**
MAX. LOAD kg													
40 to 65 S			5130	5890	6650	7410	8170	8550	8930	9215	**9500**		
30 S			5335	6125	6915	7705	8495	8890	9285	9585	9880		
20 S			5540	6360	7180	8005	8825	9235	9645	9950	10260		
10 LT (*)	4410	5180	5950	6830	7715	8595	9475	9920	10360	10690	11020	11495	12065
10 HT			5335	6125	6915	7705	8495	8890	9285	9585	9880		

SIZE	Tread pattern	SW mm	OD mm	SLR mm	RC mm	SRI	Rim	Permitted Rims	Type	Tube
IF 900/65R46 190D	**TM1000 HP**	890	2310	1030	6930	1125	DW30B		TUBELESS	

PRESSURE														
psi	**6**	**9**	**12**	**14**	**17**	**20**	**23**	**26**	**29**	**32**	**35**	**38**	**41**
bar	**0,4**	**0,6**	**0,8**	**1,0**	**1,2**	**1,4**	**1,6**	**1,8**	**2,0**	**2,2**	**2,4**	**2,6**	**2,8**
MAX. LOAD kg													
40 to 65 S			5830	6680	7420	8165	8800	9275	9755	10180	10600		
30 S			6065	6945	7715	8490	9150	9700	10250	10640	11025		
20 S			6295	7210	8015	8815	9500	10075	10645	11045	11450		
10 LT (*)	4920	5780	6765	7745	8605	9470	10205	10820	11435	11865	12295	12825	13460
10 HT			6065	6945	7715	8490	9150	9700	10250	10640	11025		

For technical notes about pressure tables please refer to page 244.

TM900 HIGH POWER

Product line specially developed to be fitted on high powered tractors with a high load capacity requirement.
Due to its dimensional characteristics and its optimized radial structure, it is able to transfer to the ground the high torque of the biggest agricultural vehicles, generating a great traction on all kind of soils.

The TM900 High Power assures outstanding road performances in terms of comfort and safety.

SIZE		
600/70R28	157D	(154E)
600/70R30	158D	(155E)
710/60R30	162D	(159E)
600/70R34	160D	(157E)
650/60R34	159D	(156E)
710/55R34	164D	(161E)
710/60R34	164D	(161E)
650/75R38	169D	(166E)

SIZE			
650/85R38		173D	(170E)
800/70R38		178D	(175E)
900/60R38		178D	(175E)
710/70R42		173D	(170E)
710/70R42	Harvester	173D	(170E)
710/70R42		179A8	*
710/75R42		175D	(172E)
900/60R42		180D	(177E)

* For harvesting applications

SIZE	Tread pattern	SW mm	OD mm	SLR mm	RC mm	SRI	Rim	Permitted Rims	Type	Tube
600/70R28 157D (154E)	TM900 HP	604	1551	699	4720	725	DW18L	DW20B	TUBELESS	

PRESSURE								
psi	9	12	14	17	20	23	29	35
bar	0,6	0,8	1,0	1,2	1,4	1,6	2,0	2,4
MAX. LOAD kg								
70 S			2325	2625	2925	3225	3525	3750
65 S			2560	2890	3220	3550	3880	**4125**
50 S	2040	2340	2690	3035	3380	3725	4075	4335
40 S	2125	2440	2805	3165	3525	3885	4250	4520
30 S	2230	2565	2945	3325	3705	4080	4460	4745
10 LT S	2615	3005	3445	3890	4335	4780	5225	5560
10 HT S	2230	2565	2945	3325	3705	4080	4460	4745

SIZE	Tread pattern	SW mm	OD mm	SLR mm	RC mm	SRI	Rim	Permitted Rims	Type	Tube
600/70R30 158D (155E)	**TM900 HP**	605	1608	722	4820	750	DW18L	DW20B	TUBELESS	

PRESSURE								
psi	**9**	**12**	**14**	**17**	**20**	**23**	**29**	**35**
bar	**0,6**	**0,8**	**1,0**	**1,2**	**1,4**	**1,6**	**2,0**	**2,4**
MAX. LOAD kg								
70 S			2405	2715	3025	3335	3645	3875
65 S			2635	2975	3315	3655	3995	**4250**
50 S	2100	2410	2770	3125	3485	3840	4195	4465
40 S	2190	2515	2890	3260	3630	4005	4375	4655
30 S	2300	2640	3035	3425	3815	4205	4595	4890
10 LT S	2695	3095	3555	4015	4470	4930	5390	5730
10 HT S	2300	2640	3035	3425	3815	4205	4595	4890

SIZE	Tread pattern	SW mm	OD mm	SLR mm	RC mm	SRI	Rim	Permitted Rims	Type	Tube
710/60R30 162D (159E)	**TM900 HP**	710	1590	720	4800	750	DW23B		TUBELESS	

PRESSURE								
psi	**9**	**12**	**14**	**17**	**20**	**23**	**29**	**35**
bar	**0,6**	**0,8**	**1,0**	**1,2**	**1,4**	**1,6**	**2,0**	**2,4**
MAX. LOAD kg								
70 S			2670	2975	3325	3630	4070	4375
65 S			2900	3230	3610	3945	4420	**4750**
50 S	2295	2645	3045	3395	3795	4140	4640	4990
40 S	2395	2760	3175	3540	3955	4320	4840	5205
30 S	2515	2900	3335	3715	4155	4535	5085	5465
10 LT S	2945	3395	3905	4355	4865	5315	5955	6400
10 HT S	2515	2900	3335	3715	4155	4535	5085	5465

SIZE	Tread pattern	SW mm	OD mm	SLR mm	RC mm	SRI	Rim	Permitted Rims	Type	Tube
600/70R34 160D (157E)	**TM900 HP**	600	1685	755	5105	800	DW18L	DW20B - W18L	TUBELESS	

PRESSURE								
psi	**9**	**12**	**14**	**17**	**20**	**23**	**29**	**35**
bar	**0,6**	**0,8**	**1,0**	**1,2**	**1,4**	**1,6**	**2,0**	**2,4**
MAX. LOAD kg								
70 S			2540	2865	3195	3550	3850	4125
65 S			2790	3150	3510	3875	4230	**4500**
50 S	2220	2550	2930	3310	3685	4000	4440	4750
40 S	2315	2660	3055	3450	3845	4250	4630	5000
30 S	2430	2795	3210	3625	4035	4500	4865	5150
10 LT S	2765	3175	3645	4185	4725	5265	5800	6300
10 HT S	2430	2795	3210	3625	4035	4500	4865	5150

SIZE	Tread pattern	SW mm	OD mm	SLR mm	RC mm	SRI	Rim	Permitted Rims	Type	Tube
650/60R34 159D (156E)	**TM900 HP**	645	1650	750	4965	775	DW20B	DW18L	TUBELESS	

PRESSURE								
psi	**9**	**12**	**14**	**17**	**20**	**23**	**29**	**35**
bar	**0,6**	**0,8**	**1,0**	**1,2**	**1,4**	**1,6**	**2,0**	**2,4**
MAX. LOAD kg								
70 S			2440	2720	3040	3320	3720	4000
65 S			2670	2975	3325	3635	4070	**4375**
50 S	2115	2435	2805	3125	3495	3815	4275	4595
40 S	2205	2540	2925	3260	3645	3980	4460	4795
30 S	2315	2670	3070	3425	3825	4180	4680	5035
10 LT S	2715	3125	3595	4010	4480	4895	5485	5895
10 HT S	2315	2670	3070	3425	3825	4180	4680	5035

SIZE	Tread pattern	SW mm	OD mm	SLR mm	RC mm	SRI	Rim	Permitted Rims	Type	Tube
710/55R34 164D (161E)	**TM900 HP**	712	1633	752	4970	775	DW23B		TUBELESS	

PRESSURE								
psi	**12**	**14**	**17**	**20**	**23**	**29**	**35**	**41**
bar	**0,8**	**1,0**	**1,2**	**1,4**	**1,6**	**2,0**	**2,4**	**2,8**
MAX. LOAD kg								
70 S			2875	3195	3515	3925	4225	4565
65 S			3150	3500	3850	4300	4625	**5000**
50 S	2605	2975	3350	3720	4090	4570	4915	5310
40 S	2690	3070	3455	3840	4220	4715	5070	5480
30 S	2855	3260	3670	4075	4485	5010	5385	5820
10 LT S	3310	3780	4255	4725	5200	5805	6245	6750
10 HT S	2855	3260	3670	4075	4485	5010	5385	5820

SIZE	Tread pattern	SW mm	OD mm	SLR mm	RC mm	SRI	Rim	Permitted Rims	Type	Tube
710/60R34 164D (161E)	**TM900 HP**	715	1700	775	5125	825	DW23B		TUBELESS	

PRESSURE								
psi	**9**	**12**	**14**	**17**	**20**	**23**	**29**	**35**
bar	**0,6**	**0,8**	**1,0**	**1,2**	**1,4**	**1,6**	**2,0**	**2,4**
MAX. LOAD kg								
70 S			2825	3145	3515	3840	4305	4625
65 S			3050	3400	3800	4150	4650	**5000**
50 S	2415	2785	3205	3570	3990	4360	4885	5250
40 S	2520	2905	3340	3725	4165	4545	5095	5475
30 S	2645	3050	3510	3910	4370	4775	5350	5750
10 LT S	3100	3570	4110	4580	5120	5595	6265	6735
10 HT S	2645	3050	3510	3910	4370	4775	5350	5750

SIZE	Tread pattern	SW mm	OD mm	SLR mm	RC mm	SRI	Rim	Permitted Rims	Type	Tube
650/75R38 169D (166E)	**TM900 HP**	676	1940	855	5840	925	DW23B		TUBELESS	

PRESSURE								
psi	**9**	**12**	**14**	**17**	**20**	**23**	**29**	**35**
bar	**0,6**	**0,8**	**1,0**	**1,2**	**1,4**	**1,6**	**2,0**	**2,4**
MAX. LOAD kg								
70 S			3290	3710	4135	4560	4985	5300
65 S			3600	4060	4525	4990	5455	**5800**
50 S	2865	3290	3780	4265	4755	5240	5725	6090
40 S	2985	3430	3940	4450	4955	5465	5970	6355
30 S	3135	3605	4140	4670	5205	5740	6270	6670
10 LT S	3675	4225	4850	5475	6100	6725	7350	7820
10 HT S	3135	3605	4140	4670	5205	5740	6270	6670

SIZE	Tread pattern	SW mm	OD mm	SLR mm	RC mm	SRI	Rim	Permitted Rims	Type	Tube
650/85R38 173D (170E)	**TM900 HP**	709	2070	910	6245	975	DW23B		TUBELESS	

PRESSURE								
psi	**9**	**12**	**14**	**17**	**20**	**23**	**29**	**35**
bar	**0,6**	**0,8**	**1,0**	**1,2**	**1,4**	**1,6**	**2,0**	**2,4**
MAX. LOAD kg								
70 S			3720	4200	4680	5160	5640	6000
65 S			4030	4550	5070	5590	6110	**6500**
50 S	3210	3690	4235	4780	5325	5870	6420	6825
40 S	3350	3845	4415	4985	5555	6125	6695	7120
30 S	3515	4040	4635	5235	5835	6430	7030	7475
10 LT S	4120	4735	5435	6135	6835	7535	8235	8760
10 HT S	3515	4040	4635	5235	5835	6430	7030	7475

SIZE	Tread pattern	SW mm	OD mm	SLR mm	RC mm	SRI	Rim	Permitted Rims	Type	Tube
800/70R38 178D (175E)	**TM900 HP**	810	2065	910	6205	975	DW25B	DW27B	TUBELESS	

PRESSURE								
psi	**9**	**12**	**14**	**17**	**20**	**23**	**29**	**35**
bar	**0,6**	**0,8**	**1,0**	**1,2**	**1,4**	**1,6**	**2,0**	**2,4**
MAX. LOAD kg								
70 S			4210	4695	5245	5730	6420	6900
65 S			4575	5100	5700	6225	6975	**7500**
50 S	3625	4175	4805	5355	5985	6540	7325	7875
40 S	3780	4355	5010	5585	6245	6820	7640	8215
30 S	3970	4575	5265	5865	6555	7160	8025	8625
10 LT S	4650	5355	6165	6870	7680	8390	9400	10110
10 HT S	3970	4575	5265	5865	6555	7160	8025	8625

SIZE	Tread pattern	SW mm	OD mm	SLR mm	RC mm	SRI	Rim	Permitted Rims	Type	Tube
900/60R38 178D (175E)	**TM900 HP**	905	2040	915	6180	975	DW28B	DW27B - DW30B	TUBELESS	

PRESSURE								
psi	**9**	**12**	**14**	**17**	**20**	**23**	**29**	**35**
bar	**0,6**	**0,8**	**1,0**	**1,2**	**1,4**	**1,6**	**2,0**	**2,4**
MAX. LOAD kg								
70 S			4210	4695	5245	5730	6420	6900
65 S			4575	5100	5700	6225	6975	**7500**
50 S	3625	4175	4805	5355	5985	6540	7325	7875
40 S	3780	4355	5010	5585	6245	6820	7640	8215
30 S	3970	4575	5265	5865	6555	7160	8025	8625
10 LT S	4650	5355	6165	6870	7680	8390	9400	10105
10 HT S	3970	4575	5265	5865	6555	7160	8025	8625

SIZE	Tread pattern	SW mm	OD mm	SLR mm	RC mm	SRI	Rim	Permitted Rims	Type	Tube
710/70R42 173D (170E)	**TM900 HP**	716	2061	910	6190	975	DW23B	DW25B	TUBELESS	

PRESSURE								
psi	**9**	**12**	**14**	**17**	**20**	**23**	**29**	**35**
bar	**0,6**	**0,8**	**1,0**	**1,2**	**1,4**	**1,6**	**2,0**	**2,4**
MAX. LOAD kg								
70 S			3720	4200	4680	5160	5640	6000
65 S			4030	4550	5070	5590	6110	**6500**
50 S	3210	3690	4235	4780	5325	5870	6420	6825
40 S	3350	3845	4415	4985	5555	6125	6695	7120
30 S	3515	4040	4635	5235	5835	6430	7030	7475
10 LT S	4120	4735	5435	6135	6835	7535	8235	8760
10 HT S	3515	4040	4635	5235	5835	6430	7030	7475

SIZE	Tread pattern	SW mm	OD mm	SLR mm	RC mm	SRI	Rim	Permitted Rims	Type	Tube
710/70R42 173D (170E)	**TM900 HP**	732	2040	910	6190	975	DW23B	DW25B	TUBELESS	

PRESSURE								
psi	**9**	**12**	**14**	**17**	**20**	**23**	**29**	**35**
bar	**0,6**	**0,8**	**1,0**	**1,2**	**1,4**	**1,6**	**2,0**	**2,4**
MAX. LOAD kg								
70S			3720	4200	4680	5160	5640	6000
65 S			4030	4550	5070	5590	6110	**6500**
50 S	3210	3690	4235	4780	5325	5870	6420	6825
40 S	3350	3845	4415	4985	5555	6125	6695	7120
30 S	3515	4040	4635	5235	5835	6430	7030	7475
10 LT S	4120	4735	5435	6135	6835	7535	8235	8760
10 HT S	3515	4040	4635	5235	5835	6430	7030	7475

SIZE	Tread pattern	SW mm	OD mm	SLR mm	RC mm	SRI	Rim	Permitted Rims	Type	Tube
710/70R42 179A8	**TM900 HP Harvester**	725	2070	915	6280	975	DW23B	DW25B	TUBELESS	

PRESSURE											
psi	**12**	**14**	**17**	**20**	**23**	**29**	**35**	**41**	**46**	**49**	**55**
bar	**0,8**	**1,0**	**1,2**	**1,4**	**1,6**	**2,0**	**2,4**	**2,8**	**3,2**	**3,4**	**3,8**
MAX. LOAD kg											
40 S	3705	4165	4605	5055	5485	6030	6575	7165	**7750**		
30 S	3965	4455	4930	5410	5870	6450	7035	7665	8295		
10 LT S	4590	5160	5875	6595	7260	8430	9250	10080	10695	11190	11625
10 HT S	3965	4455	4930	5410	5870	6450	7035	7665	8295		
10 Cyc S		5850	6660	7475	8230	9555	10485	11425	12430	12685	13175

For harvesting applications

SIZE	Tread pattern	SW mm	OD mm	SLR mm	RC mm	SRI	Rim	Permitted Rims	Type	Tube
710/75R42 175D (172E)	**TM900 HP**	720	2140	945	6415	1025	DW23B		TUBELESS	

PRESSURE								
psi	**9**	**12**	**14**	**17**	**20**	**23**	**29**	**35**
bar	**0,6**	**0,8**	**1,0**	**1,2**	**1,4**	**1,6**	**2,0**	**2,4**
MAX. LOAD kg								
70 S			3910	4410	4915	5400	5900	6300
65 S			4280	4830	5385	5935	6485	**6900**
50 S	3405	3910	4490	5070	5650	6230	6810	7300
40 S	3550	4080	4685	5290	5895	6500	7100	7750
30 S	3730	4285	4920	5555	6190	6825	7460	8000
10 LT S	4235	4865	5590	6415	7245	8075	8900	9750
10 HT S	3730	4285	4920	5555	6190	6825	7460	8000

SIZE	Tread pattern	SW mm	OD mm	SLR mm	RC mm	SRI	Rim	Permitted Rims	Type	Tube
900/60R42 180D (177E)	**TM900 HP**	905	2140	960	6425	1025	DW28B	DW27B - DW30B	TUBELESS	

PRESSURE								
psi	**9**	**12**	**14**	**17**	**20**	**23**	**29**	**35**
bar	**0,6**	**0,8**	**1,0**	**1,2**	**1,4**	**1,6**	**2,0**	**2,4**
MAX. LOAD kg								
70 S			4455	4965	5550	6060	6790	7300
65 S			4880	5440	6080	6640	7440	**8000**
50 S	3865	4455	5125	5715	6385	6975	7815	8400
40 S	4030	4645	5345	5960	6660	7275	8150	8760
30 S	4235	4880	5615	6260	6995	7640	8560	9200
10 LT S	4960	5715	6575	7330	8190	8945	10025	10780
10 HT S	4235	4880	5615	6260	6995	7640	8560	9200

For technical notes about pressure tables please refer to page 244.

TM1060

Engineered with BLUE TIRE Technology, TM1060 upgrades the Trelleborg offering of high performance solutions for new generations of tractors. On the field, the ProgressiveTraction® design provides superior traction capacity, reduced working time, operating cost and fuel expenses. Capable of working at extremely low pressure, with the typical aspect ratio of a 60 series, the TM1060 generates an extra wide footprint area providing premium respect for the soil, farm productivity and crop yield.
On the road, the new sidewall design significantly lowers rolling resistance, fuel consumption and emissions, while increasing stress tolerance, comfort and security for the operator.

SIZE	
VF 520/60R28 NRO	149D
VF 600/60R28 NRO	157D
VF 600/60R30 NRO	158D
NEW VF 600/60R38	168D (165E)

SIZE	
VF 650/60R38 NRO	166D
VF 710/60R38 NRO	171D
VF 710/60R42 NRO	173D (170E)
VF 750/70R44	183D

SIZE	Tread pattern	SW mm	OD mm	SLR mm	RC mm	SRI	Rim	Permitted Rims NRO	Type	Tube
VF 520/60R28 149D	TM1060	520	1340	575	3985	650	DW18L	W18L - W16L DW16L	TUBELESS	
PRESSURE										
psi		**9**	**12**		**14**	**17**		**20**		**23**
bar		**0,6**	**0,8**		**1,0**	**1,2**		**1,4**		**1,6**
MAX. LOAD kg										
40 to 65 S			2080		2375	2665		2960		**3250**
30 S		1825	2120		2420	2720		3015		3315
20 S		1860	2165		2465	2770		3075		3380
10 LT		1965	2290		2610	2930		3255		3575
10 HT (*)		1825	2120		2420	2720		3015		3315

NRO = Narrow Rim Option

SIZE	Tread pattern	SW mm	OD mm	SLR mm	RC mm	SRI	Rim	Permitted Rims NRO	Type	Tube
VF 600/60R28 157D	**TM1060**	600	1420	605	4205	675	DW20B	DW18L - DW21B	TUBELESS	

PRESSURE						
psi	**9**	**12**	**14**	**17**	**20**	**23**
bar	**0,6**	**0,8**	**1,0**	**1,2**	**1,4**	**1,6**
MAX. LOAD kg						
40 to 65 S		2640	3015	3385	3755	**4125**
30 S	2315	2695	3070	3450	3830	4210
20 S	2360	2745	3130	3520	3905	4290
10 LT	2495	2905	3310	3720	4130	4540
10 HT (*)	2315	2695	3070	3450	3830	4210

NRO = Narrow Rim Option

SIZE	Tread pattern	SW mm	OD mm	SLR mm	RC mm	SRI	Rim	Permitted Rims NRO	Type	Tube
VF 600/60R30 158D	**TM1060**	595	1490	625	4420	700	DW20B	DW18L - DW21B	TUBELESS	

PRESSURE						
psi	**9**	**12**	**14**	**17**	**20**	**23**
bar	**0,6**	**0,8**	**1,0**	**1,2**	**1,4**	**1,6**
MAX. LOAD kg						
40 to 65 S		2720	3105	3485	3870	**4250**
30 S	2385	2775	3165	3555	3945	4335
20 S	2430	2830	3225	3625	4020	4420
10 LT	2570	2990	3415	3835	4255	4675
10 HT (*)	2385	2775	3165	3555	3945	4335

NRO = Narrow Rim Option

SIZE	Tread pattern	SW mm	OD mm	SLR mm	RC mm	SRI	Rim	Permitted Rims NRO	Type	Tube
VF 600/60R38 168D (165E)	**TM1060**	605	1683	746	5050	800	DW20B	DW18L	TUBELESS	

PRESSURE											
psi	**9**	**12**	**14**	**17**	**20**	**23**	**26**	**29**	**32**	**35**
bar	**0,6**	**0,8**	**1,0**	**1,2**	**1,4**	**1,6**	**1,8**	**2,0**	**2,2**	**2,4**
MAX. LOAD kg										
70 S		2750	3160	3565	3975	4385	4585	4790	4945	5150
40 to 65 S		3025	3470	3920	4370	4815	5040	5265	5430	**5600**
30 S	2685	3085	3540	4000	4455	4910	5140	5370	5540	5710
20 S	2735	3145	3610	4075	4545	5010	5240	5475	5650	5825
10 LT S	2895	3325	3820	4310	4805	5300	5545	5790	5975	6160
10 HT S (*)	2685	3085	3540	4000	4455	4910	5140	5370	5540	5710

SIZE	Tread pattern	SW mm	OD mm	SLR mm	RC mm	SRI	Rim	Permitted Rims NRO	Type	Tube
VF 650/60R38 166D	**TM1060**	655	1735	755	5190	825	DW23B	MW23B-DW20B	TUBELESS	

PRESSURE						
psi	**9**	**12**	**14**	**17**	**20**	**23**
bar	**0,6**	**0,8**	**1,0**	**1,2**	**1,4**	**1,6**
MAX. LOAD kg						
40 to 65 S		3395	3870	4350	4825	**5300**
30 S	2975	3460	3945	4435	4920	5405
20 S	3030	3530	4025	4520	5015	5510
10 LT	3205	3730	4255	4780	5305	5830
10 HT (*)	2975	3460	3945	4435	4920	5405

NRO = Narrow Rim Option

SIZE	Tread pattern	SW mm	OD mm	SLR mm	RC mm	SRI	Rim	Permitted Rims NRO	Type	Tube
VF 710/60R38 171D	**TM1060**	715	1820	785	5420	875	DW25B	MW25B-DW23B	TUBELESS	

PRESSURE						
psi	**9**	**12**	**14**	**17**	**20**	**23**
bar	**0,6**	**0,8**	**1,0**	**1,2**	**1,4**	**1,6**
MAX. LOAD kg						
40 to 65 S		3940	4490	5045	5600	**6150**
30 S	3450	4015	4580	5145	5710	6275
20 S	3520	4095	4670	5245	5820	6395
10 LT	3720	4330	4940	5545	6155	6765
10 HT (*)	3450	4015	4580	5145	5710	6275

NRO = Narrow Rim Option

SIZE	Tread pattern	SW mm	OD mm	SLR mm	RC mm	SRI	Rim	Permitted Rims NRO	Type	Tube
VF 710/60R42 173D	**TM1060**	715	1930	835	5735	925	DW25B	MW25B-DW23B	TUBELESS	

PRESSURE						
psi	**9**	**12**	**14**	**17**	**20**	**23**
bar	**0,6**	**0,8**	**1,0**	**1,2**	**1,4**	**1,6**
MAX. LOAD kg						
70 S		3785	4320	4850	5385	6000
40 to 65 S		4160	4745	5330	5915	**6500**
30 S	3645	4245	4840	5435	6035	6630
20 S	3720	4325	4935	5545	6150	6760
10 LT S	3935	4575	5220	5865	6505	7150
10 HT S (*)	3645	4245	4840	5435	6035	6630

NRO = Narrow Rim Option

SIZE	Tread pattern	SW mm	OD mm	SLR mm	RC mm	SRI	Rim	Permitted Rims NRO	Type	Tube
VF 750/70R44 183D	**TM1060**	770	2186	945	6465	1025	DW25B		TUBELESS	
PRESSURE										
psi		**9**		**12**		**14**		**17**	**20**	**23**
bar		**0,6**		**0,8**		**1,0**		**1,2**	**1,4**	**1,6**
MAX. LOAD kg										
40 to 65 S			5600		6390		7175		7965	**8750**
30 S		4910		5710		6515		7320	8120	8925
20 S		5005		5825		6645		7460	8280	9100
10 LT		5295		6160		7025		7890	8760	9625
10 HT (*)		4910		5710		6515		7320	8120	8925

NRO = Narrow Rim Option

For technical notes about pressure tables please refer to page 244.

TM800

The TM800, one of the most succesful product of our agricultural radial range is D rated, able to reach 65 Km/h on the road at the nominal pressure of 1.6 bar. With its extra-large tread pattern offers maximum performance in the field and it is able to carry heavy loads and to work at very low pressure.
Its winning feature is its excellent performance on the road in terms of stability, handling, comfort and long tire life.

SIZE		
320/65R18	109A8 (109B)	
340/65R18	113A8 (113B)	
440/65R24	128D	
480/65R24	133D	
540/65R24	140D	
540/65R24	146A8	*
540/65R26	141D	
440/65R28	131D	
480/65R28	136D	
540/65R28	142D	
540/65R28	142D	ProgressiveTraction® Version
600/65R28	147D	
540/65R30	143D	

SIZE		
540/65R34	145D	
600/65R34	151D	
540/65R38	147D	
600/65R38	153D	
650/65R38	157D	
650/65R38	157D	ProgressiveTraction® Version
710/70R38	166D	
710/70R38	166D	Sugar Cane
710/70R38	175D	Forage
600/65R42	154D	
650/65R42	158D	
650/65R42	165D (168A8)	

* For harvesting applications

SIZE	Tread pattern	SW mm	OD mm	SLR mm	RC mm	SRI	Rim	Permitted Rims	Type	Tube
320/65R18 109A8 (109B)	TM800	310	871	388	2585	425	W9	W10 - W10.5 - W11	TUBELESS	

PRESSURE									H (*)
psi	9	12	14	17	20	23	26	28	30
bar	0,6	0,8	1,0	1,2	1,4	1,6	1,8	1,9	2,1
MAX. LOAD kg									
50 S	530	590	700	810	920	1030			
40 S	530	590	700	810	920	**1030**			
30 S	570	630	750	870	980	1100			
10 LT S	690	760	910	1060	1210	1360	1510	1550	1750
10 HT S	570	630	750	870	980	1100			

SIZE	Tread pattern	SW mm	OD mm	SLR mm	RC mm	SRI	Rim	Permitted Rims	Type	Tube
340/65R18 113A8 (113B)	**TM800**	320	900	396	2695	425	W9	W10 - W10.5 - W11	TUBELESS	

PRESSURE									H (*)
psi	**9**	**12**	**14**	**17**	**20**	**23**	**26**	**28**	**30**
bar	**0,6**	**0,8**	**1,0**	**1,2**	**1,4**	**1,6**	**1,8**	**1,9**	**2,1**
MAX. LOAD kg									
50 S	755	835	915	995	1070	1150			
40 S	755	835	915	995	1070	**1150**			
30 S	805	890	975	1060	1150	1230			
10 LT S	1030	1140	1250	1350	1460	1570	1680	1730	1960
10 HT S	805	890	975	1060	1150	1230			

SIZE	Tread pattern	SW mm	OD mm	SLR mm	RC mm	SRI	Rim	Permitted Rims	Type	Tube
440/65R24 128D	**TM800**	441	1182	537	3545	575	DW14L	W13 - W14L- W15L(°) DW13 - DW15L(°)	TUBELESS	14.9-24 TR218

PRESSURE									H (*)
psi	**9**	**12**	**14**	**17**	**20**	**23**	**26**	**28**	**30**
bar	**0,6**	**0,8**	**1,0**	**1,2**	**1,4**	**1,6**	**1,8**	**1,9**	**2,1**
MAX. LOAD kg									
65 S	1045	1210	1370	1515	1660	**1800**			
50 S	1100	1270	1440	1590	1740	1890			
40 S	1145	1325	1500	1660	1815	1975			
30 S	1205	1390	1575	1740	1905	2070			
10 LT S	1420	1645	1865	2060	2255	2450	2620	2700	3060
10 HT S	1205	1390	1575	1740	1905	2070			

SIZE	Tread pattern	SW mm	OD mm	SLR mm	RC mm	SRI	Rim	Permitted Rims	Type	Tube
480/65R24 133D	**TM800**	479	1234	563	3670	600	DW15L	W14L - W15L - W16L(°) DW14L - DW15L - DW16L(°)	TUBELESS	16.9-24 TR218

PRESSURE									H (*)
psi	**9**	**12**	**14**	**17**	**20**	**23**	**26**	**28**	**30**
bar	**0,6**	**0,8**	**1,0**	**1,2**	**1,4**	**1,6**	**1,8**	**1,9**	**2,1**
MAX. LOAD kg									
65 S	1195	1385	1570	1735	1900	**2060**			
50 S	1255	1450	1645	1820	1990	2165			
40 S	1310	1515	1715	1895	2080	2260			
30 S	1375	1590	1805	1990	2180	2370			
10 LT S	1625	1880	2130	2355	2580	2805	2995	3090	3505
10 HT S	1375	1590	1805	1990	2180	2370			

SIZE	Tread pattern	SW mm	OD mm	SLR mm	RC mm	SRI	Rim	Permitted Rims	Type	Tube
540/65R24 140D	**TM800**	530	1312	595	3940	625	DW16L	W16L - W15L(°) - W18L DW15L(°)	TUBELESS	16.9-24 TR218

PRESSURE									H (*)
psi	**9**	**12**	**14**	**17**	**20**	**23**	**26**	**28**	**30**
bar	**0,6**	**0,8**	**1,0**	**1,2**	**1,4**	**1,6**	**1,8**	**1,9**	**2,1**
MAX. LOAD kg									
65 S	1450	1675	1900	2100	2300	**2500**			
50 S	1525	1760	1995	2205	2415	2625			
40 S	1590	1835	2085	2300	2520	2740			
30 S	1670	1930	2185	2415	2645	2875			
10 LT S	1975	2280	2585	2860	3130	3400	3635	3750	4250
10 HT S	1670	1930	2185	2415	2645	2875			

SIZE	Tread pattern	SW mm	OD mm	SLR mm	RC mm	SRI	Rim	Permitted Rims	Type	Tube
540/65R24 146A8	**TM800**	535	1312	595	3940	625	DW16L	W16L- W15L(°) W18L-DW15L(°)	TUBELESS	16.9-24 TR218

PRESSURE									H (*)
psi	**12**	**14**	**17**	**20**	**23**	**29**	**35**	**38**	**41**
bar	**0,8**	**1,0**	**1,2**	**1,4**	**1,6**	**2,0**	**2,4**	**2,6**	**2,8**
MAX. LOAD kg									
40 S	1650	1890	2100	2310	2490	2760	**3000**		
30 S	1770	2025	2250	2475	2665	2955	3210		
10 LT S	2245	2575	2860	3145	3390	3755	4080	4285	4500
10 HT S	1770	2025	2250	2475	2665	2955	3210		
10 Cyc S	2495	2855	3175	3490	3760	4170	4530	4825	5100

For harvesting applications

SIZE	Tread pattern	SW mm	OD mm	SLR mm	RC mm	SRI	Rim	Permitted Rims	Type	Tube
540/65R26 141D	**TM800**	540	1365	615	4060	650	DW16L	W15L(°) - W16L W18L - DW18L DW15L(°)	TUBELESS	16.9-26 TR218

PRESSURE									H (*)
psi	**9**	**12**	**14**	**17**	**20**	**23**	**26**	**28**	**30**
bar	**0,6**	**0,8**	**1,0**	**1,2**	**1,4**	**1,6**	**1,8**	**1,9**	**2,1**
MAX. LOAD kg									
65 S	1495	1730	1960	2165	2370	**2575**			
50 S	1570	1815	2055	2275	2490	2705			
40 S	1640	1890	2145	2370	2595	2820			
30 S	1720	1985	2255	2490	2725	2965			
10 LT S	2035	2350	2665	2945	3225	3505	3745	3865	4380
10 HT S	1720	1985	2255	2490	2725	2965			

SIZE	Tread pattern	SW mm	OD mm	SLR mm	RC mm	SRI	Rim	Permitted Rims	Type	Tube
440/65R28 131D	**TM800**	441	1283	583	3905	625	W14L	W13L	TUBELESS	16.9-28 TR218

PRESSURE									H (*)
psi	**9**	**12**	**14**	**17**	**20**	**23**	**26**	**28**	**30**
bar	**0,6**	**0,8**	**1,0**	**1,2**	**1,4**	**1,6**	**1,8**	**1,9**	**2,1**
MAX. LOAD kg									
65 S	1135	1310	1485	1640	1795	**1950**			
50 S	1190	1375	1560	1720	1885	2050			
40 S	1240	1435	1625	1795	1965	2140			
30 S	1305	1505	1705	1885	2065	2245			
10 LT S	1540	1780	2020	2230	2440	2655	2835	2925	3315
10 HT S	1305	1505	1705	1885	2065	2245			

SIZE	Tread pattern	SW mm	OD mm	SLR mm	RC mm	SRI	Rim	Permitted Rims	Type	Tube
480/65R28 136D	**TM800**	479	1335	605	4025	650	DW15L	W14L - W15L - W16L(°) DW14L - DW16L(°)	TUBELESS	16.9-28 TR218

PRESSURE									H (*)
psi	**9**	**12**	**14**	**17**	**20**	**23**	**26**	**28**	**30**
bar	**0,6**	**0,8**	**1,0**	**1,2**	**1,4**	**1,6**	**1,8**	**1,9**	**2,1**
MAX. LOAD kg									
65 S	1300	1505	1705	1885	2065	**2240**			
50 S	1365	1580	1790	1980	2165	2355			
40 S	1425	1645	1865	2065	2260	2455			
30 S	1495	1730	1960	2165	2370	2580			
10 LT S	1770	2045	2320	2560	2805	3050	3260	3360	3810
10 HT S	1495	1730	1960	2165	2370	2580			

SIZE	Tread pattern	SW mm	OD mm	SLR mm	RC mm	SRI	Rim	Permitted Rims	Type	Tube
540/65R28 142D	**TM800**	530	1413	637	4240	675	DW16L	W15L(°) - W16L - W18L DW15L(°) - DW18L	TUBELESS	16.9-28 TR218

PRESSURE									H (*)
psi	**9**	**12**	**14**	**17**	**20**	**23**	**26**	**28**	**30**
bar	**0,6**	**0,8**	**1,0**	**1,2**	**1,4**	**1,6**	**1,8**	**1,9**	**2,1**
MAX. LOAD kg									
65 S	1540	1780	2015	2230	2440	**2650**			
50 S	1615	1865	2115	2340	2560	2785			
40 S	1685	1945	2210	2440	2670	2905			
30 S	1770	2045	2320	2560	2805	3050			
10 LT S	2095	2415	2740	3030	3320	3605	3855	3975	4505
10 HT S	1770	2045	2320	2560	2805	3050			

SIZE	Tread pattern	SW mm	OD mm	SLR mm	RC mm	SRI	Rim	Permitted Rims	Type	Tube
540/65R28 142D	**TM800** ProgressiveTraction®	525	1425	630	4240	675	DW16L	W15L(°) - W16L - W18L DW15L(°) - DW18L	TUBELESS	16.9-28 TR218

PRESSURE									H (*)
psi	**9**	**12**	**14**	**17**	**20**	**23**	**26**	**28**	**30**
bar	**0,6**	**0,8**	**1,0**	**1,2**	**1,4**	**1,6**	**1,8**	**1,9**	**2,1**
MAX. LOAD kg									
65 S	1540	1780	2015	2230	2440	**2650**			
50 S	1615	1865	2115	2340	2560	2785			
40 S	1685	1945	2210	2440	2670	2905			
30 S	1770	2045	2320	2560	2805	3050			
10 LT S	2095	2415	2740	3030	3320	3605	3855	3975	4505
10 HT S	1770	2045	2320	2560	2805	3050			

SIZE	Tread pattern	SW mm	OD mm	SLR mm	RC mm	SRI	Rim	Permitted Rims	Type	Tube
600/65R28 147D	**TM800**	590	1491	660	4447	700	DW18L	W18L - DW20B	TUBELESS	16.9-28 TR218

PRESSURE									H (*)
psi	**9**	**12**	**14**	**17**	**20**	**23**	**26**	**28**	**30**
bar	**0,6**	**0,8**	**1,0**	**1,2**	**1,4**	**1,6**	**1,8**	**1,9**	**2,1**
MAX. LOAD kg									
65 S	1790	2065	2345	2590	2835	**3075**			
50 S	1880	2170	2460	2720	2980	3235			
40 S	1960	2260	2565	2835	3105	3375			
30 S	2055	2375	2695	2980	3260	3545			
10 LT S	2430	2810	3185	3520	3855	4190	4480	4620	5240
10 HT S	2055	2375	2695	2980	3260	3545			

SIZE	Tread pattern	SW mm	OD mm	SLR mm	RC mm	SRI	Rim	Permitted Rims	Type	Tube
540/65R30 143D	**TM800**	530	1464	665	4400	700	DW16L	W15L(°) - W16L - W18L DW15L(°) - DW18L	TUBELESS	18.4-30 TR218

PRESSURE									H (*)
psi	**9**	**12**	**14**	**17**	**20**	**23**	**26**	**28**	**30**
bar	**0,6**	**0,8**	**1,0**	**1,2**	**1,4**	**1,6**	**1,8**	**1,9**	**2,1**
MAX. LOAD kg									
65 S	1585	1830	2075	2290	2510	**2725**			
50 S	1660	1920	2175	2405	2635	2865			
40 S	1735	2000	2270	2510	2750	2985			
30 S	1820	2100	2385	2635	2885	3135			
10 LT S	2150	2485	2820	3115	3410	3710	3965	4090	4635
10 HT S	1820	2100	2385	2635	2885	3135			

SIZE	Tread pattern	SW mm	OD mm	SLR mm	RC mm	SRI	Rim	Permitted Rims	Type	Tube
540/65R34 145D	**TM800**	530	1566	710	4710	750	DW16L	W15L(°) - W16L - W18L DW15L(°) - DW18L	TUBELESS	16.9-34 TR218

PRESSURE									H (*)
psi	**9**	**12**	**14**	**17**	**20**	**23**	**26**	**28**	**30**
bar	**0,6**	**0,8**	**1,0**	**1,2**	**1,4**	**1,6**	**1,8**	**1,9**	**2,1**
MAX. LOAD kg									
65 S	1685	1945	2205	2440	2670	**2900**			
50 S	1770	2045	2315	2560	2805	3045			
40 S	1845	2130	2415	2670	2925	3180			
30 S	1935	2235	2535	2805	3070	3335			
10 LT S	2290	2645	3000	3315	3630	3945	4220	4350	4930
10 HT S	1935	2235	2535	2805	3070	3335			

SIZE	Tread pattern	SW mm	OD mm	SLR mm	RC mm	SRI	Rim	Permitted Rims	Type	Tube
600/65R34 151D	**TM800**	600	1644	740	4920	775	DW20B	DW18L - W18L	TUBELESS	

PRESSURE									H (*)
psi	**9**	**12**	**14**	**17**	**20**	**23**	**26**	**28**	**30**
bar	**0,6**	**0,8**	**1,0**	**1,2**	**1,4**	**1,6**	**1,8**	**1,9**	**2,1**
MAX. LOAD kg									
65 S	2005	2315	2625	2900	3175	**3450**			
50 S	2105	2430	2755	3045	3335	3625			
40 S	2195	2535	2875	3175	3480	3780			
30 S	2305	2660	3020	3335	3655	3970			
10 LT S	2725	3145	3570	3945	4320	4695	5020	5175	5865
10 HT S	2305	2660	3020	3335	3655	3970			

SIZE	Tread pattern	SW mm	OD mm	SLR mm	RC mm	SRI	Rim	Permitted Rims	Type	Tube
540/65R38 147D	**TM800**	530	1667	760	5010	800	DW16L	W15L(°) - W16L - W18L DW15L(°) - DW18L	TUBELESS	18.4-38 TR218

PRESSURE									**H (*)**
psi	**9**	**12**	**14**	**17**	**20**	**23**	**26**	**28**	**30**
bar	**0,6**	**0,8**	**1,0**	**1,2**	**1,4**	**1,6**	**1,8**	**1,9**	**2,1**
MAX. LOAD kg									
65 S	1790	2065	2345	2590	2835	**3080**			
50 S	1880	2170	2460	2720	2980	3235			
40 S	1960	2260	2565	2835	3105	3375			
30 S	2055	2375	2695	2980	3260	3545			
10 LT S	2430	2810	3185	3520	3855	4190	4480	4620	5240
10 HT S	2055	2375	2695	2980	3260	3545			

SIZE	Tread pattern	SW mm	OD mm	SLR mm	RC mm	SRI	Rim	Permitted Rims	Type	Tube
600/65R38 153D	**TM800**	590	1745	785	5210	825	DW18L	W18L - DW20B	TUBELESS	20.8-38 TR218

PRESSURE									**H (*)**
psi	**9**	**12**	**14**	**17**	**20**	**23**	**26**	**28**	**30**
bar	**0,6**	**0,8**	**1,0**	**1,2**	**1,4**	**1,6**	**1,8**	**1,9**	**2,1**
MAX. LOAD kg									
65 S	2125	2455	2785	3075	3370	**3660**			
50 S	2230	2575	2925	3230	3540	3845			
40 S	2325	2690	3050	3370	3690	4010			
30 S	2445	2825	3200	3540	3875	4210			
10 LT S	2890	3335	3785	4185	4580	4980	5325	5490	6225
10 HT S	2445	2825	3200	3540	3875	4210			

SIZE	Tread pattern	SW mm	OD mm	SLR mm	RC mm	SRI	Rim	Permitted Rims	Type	Tube
650/65R38 157D	**TM800**	645	1811	815	5395	875	DW20B	W18L(°) - DW18L(°)	TUBELESS	20.8-38 TR218

PRESSURE									**H (*)**
psi	**9**	**12**	**14**	**17**	**20**	**23**	**26**	**28**	**30**
bar	**0,6**	**0,8**	**1,0**	**1,2**	**1,4**	**1,6**	**1,8**	**1,9**	**2,1**
MAX. LOAD kg									
65 S	2395	2765	3135	3465	3795	**4125**			
50 S	2515	2905	3295	3640	3985	4335			
40 S	2620	3030	3435	3795	4160	4520			
30 S	2755	3180	3610	3985	4365	4745			
10 LT S	3255	3760	4265	4715	5165	5610	6000	6190	7015
10 HT S	2755	3180	3610	3985	4365	4745			

SIZE	Tread pattern	SW mm	OD mm	SLR mm	RC mm	SRI	Rim	Permitted Rims	Type	Tube
650/65R38 157D	**TM800** ProgressiveTraction®	650	1820	810	5395	875	DW20B	W18L(°) - DW18L(°)	TUBELESS	20.8-38 TR218

PRESSURE									**H (*)**
psi	**9**	**12**	**14**	**17**	**20**	**23**	**26**	**28**	**30**
bar	**0,6**	**0,8**	**1,0**	**1,2**	**1,4**	**1,6**	**1,8**	**1,9**	**2,1**
MAX. LOAD kg									
65 S	2395	2765	3135	3465	3795	**4125**			
50 S	2515	2905	3295	3640	3985	4335			
40 S	2620	3030	3435	3795	4160	4520			
30 S	2755	3180	3610	3985	4365	4745			
10 LT S	3255	3760	4265	4715	5165	5610	6000	6190	7015
10 HT S	2755	3180	3610	3985	4365	4745			

SIZE	Tread pattern	SW mm	OD mm	SLR mm	RC mm	SRI	Rim	Permitted Rims	Type	Tube
710/70R38 166D	**TM800**	716	1959	884	5765	925	DW23B		TUBELESS	

PRESSURE									**H (*)**
psi	**9**	**12**	**14**	**17**	**20**	**23**	**26**	**28**	**30**
bar	**0,6**	**0,8**	**1,0**	**1,2**	**1,4**	**1,6**	**1,8**	**1,9**	**2,1**
MAX. LOAD kg									
65 S	3075	3555	4030	4455	4880	**5300**			
50 S	3230	3730	4230	4675	5120	5565			
40 S	3370	3890	4415	4875	5340	5805			
30 S	3540	4085	4635	5120	5610	6095			
10 LT S	4185	4830	5480	6055	6635	7210	7710	7950	9010
10 HT S	3540	4085	4635	5120	5610	6095			

SIZE	Tread pattern	SW mm	OD mm	SLR mm	RC mm	SRI	Rim	Permitted Rims	Type	Tube
710/70R38 166D	**TM800** Sugar Cane	716	1959	884	5765	925	DW23B		TUBELESS	

PRESSURE									**H (*)**
psi	**9**	**12**	**14**	**17**	**20**	**23**	**26**	**28**	**30**
bar	**0,6**	**0,8**	**1,0**	**1,2**	**1,4**	**1,6**	**1,8**	**1,9**	**2,1**
MAX. LOAD kg									
65 S	3075	3555	4030	4455	4880	**5300**			
50 S	3230	3730	4230	4675	5120	5565			
40 S	3370	3890	4415	4875	5340	5805			
30 S	3540	4085	4635	5120	5610	6095			
10 LT S	4185	4830	5480	6055	6635	7210	7710	7950	9010
10 HT S	3540	4085	4635	5120	5610	6095			

SIZE	Tread pattern	SW mm	OD mm	SLR mm	RC mm	SRI	Rim	Permitted Rims	Type	Tube
710/70R38 175D	**TM800** Forage	715	1960	884	5885	925	DW23B		TUBELESS	

PRESSURE										
psi	**12**	**14**	**17**	**20**	**23**	**29**	**35**	**41**	**46**	**49**
bar	**0,8**	**1,0**	**1,2**	**1,4**	**1,6**	**2,0**	**2,4**	**2,8**	**3,2**	**3,4**
MAX. LOAD kg										
65 S	3450	3935	4420	4900	5385	5935	6280	**6900**		
50 S	3625	4135	4645	5145	5655	6235	6595	7245		
40 S	3780	4310	4840	5370	5900	6500	6880	7560		
30 S	3970	4530	5085	5635	6195	6830	7225	7935		
10 LT S	4275	4875	5640	6395	7125	8310	8830	9705	9940	10350
10 HT S	3970	4530	5085	5635	6195	6830	7225	7935		
10 Cyc S		5710	6545	7350	8510	9465	10015	11040	11300	11730

SIZE	Tread pattern	SW mm	OD mm	SLR mm	RC mm	SRI	Rim	Permitted Rims	Type	Tube
600/65R42 154D	**TM800**	590	1847	830	5580	875	DW18L	W18L - DW20B	TUBELESS	20.8-42 TR218

PRESSURE									H (*)
psi	**9**	**12**	**14**	**17**	**20**	**23**	**26**	**28**	**30**
bar	**0,6**	**0,8**	**1,0**	**1,2**	**1,4**	**1,6**	**1,8**	**1,9**	**2,1**
MAX. LOAD kg									
65 S	2175	2515	2850	3150	3450	**3750**			
50 S	2285	2640	2995	3310	3625	3940			
40 S	2385	2755	3125	3450	3780	4110			
30 S	2505	2890	3280	3625	3970	4315			
10 LT S	2960	3420	3880	4285	4695	5100	5455	5625	6375
10 HT S	2505	2890	3280	3625	3970	4315			

SIZE	Tread pattern	SW mm	OD mm	SLR mm	RC mm	SRI	Rim	Permitted Rims	Type	Tube
650/65R42 158D	**TM800**	645	1913	860	5780	925	DW20B	W18L(°) - DW18L(°)	TUBELESS	20.8-42 TR218

PRESSURE									H (*)
psi	**9**	**12**	**14**	**17**	**20**	**23**	**26**	**28**	**30**
bar	**0,6**	**0,8**	**1,0**	**1,2**	**1,4**	**1,6**	**1,8**	**1,9**	**2,1**
MAX. LOAD kg									
65 S	2465	2850	3230	3570	3910	**4250**			
50 S	2590	2990	3395	3750	4110	4465			
40 S	2700	3120	3540	3910	4285	4655			
30 S	2835	3275	3715	4110	4500	4890			
10 LT S	3355	3875	4395	4860	5320	5780	6180	6375	7225
10 HT S	2835	3275	3715	4110	4500	4890			

SIZE	Tread pattern	SW mm	OD mm	SLR mm	RC mm	SRI	Rim	Permitted Rims	Type	Tube
650/65R42 165D (168A8)	**TM800**	645	1927		5815	925	DW20B	DW18L	TUBELESS	20.8-42 TR218

PRESSURE								
psi	**9**	**12**	**14**	**17**	**20**	**23**	**29**	**35**
bar	**0,6**	**0,8**	**1,0**	**1,2**	**1,4**	**1,6**	**2,0**	**2,4**
MAX. LOAD kg								
65 S						4275	4790	**5150**
50 S	2580	3015	3450	3830	4220	4545	5090	5470
40 S	2660	3110	3560	3955	4355	4690	5250	5645
30 S	2825	3300	3780	4200	4625	4980	5580	5995
10 LT S	3275	3830	4385	4870	5360	5775	6470	6955
10 HT S	2825	3300	3780	4200	4625	4980	5580	5995

Design data = the dimensions of size in design data are calculated dimensions and not measured data on the normal production tire

For technical notes about pressure tables please refer to page 244.

TM800 HIGH SPEED

The TM800 High Speed has been developed to extend the well-known road performance of TM800, utilising the High Speed technology to generate the most advanced radial tire for agricultural applications.
TM800 High Speed handling, grip, comfort and safety, reach excellent levels and is matching perfectly with the technological evolution of modern agricultural tractors, that leads to a great sophistication in terms of construction (front or full suspension system) and higher safety and performances level.

SIZE		
540/65R28	149D	(146E)
600/65R28	154D	(151E)
540/65R30	150D	(147E)
540/65R34	152D	(149E)
600/65R34	157D	(154E)

SIZE		
540/65R38	153D	(150E)
650/65R38	163D	(159E)
650/65R38	166D	(169A8)
710/70R38	171D	(168E)

SIZE	Tread pattern	SW mm	OD mm	SLR mm	RC mm	SRI	Rim	Permitted Rims	Type	Tube
540/65R28 149D (146E)	TM800 HS	530	1413	637	4220	675	DW16L	W15L(°) - W16L - W18L DW15L(°) - DW18L	TUBELESS	16.9-28 TR218

PRESSURE									
psi	6	9	12	17	23	26	29	32	35
bar	0,4	0,6	0,8	1,2	1,6	1,8	2,0	2,2	2,4
MAX. LOAD kg									
70 S					2415	2560	2710	2855	3000
65 S					2650	2800	2950	3100	**3250**
50 S		1710	1890	2355	2785	2940	3100	3255	3415
40 S		1785	1975	2455	2905	3070	3235	3395	3560
30 S		1875	2070	2580	3050	3220	3395	3565	3740
10 LT S	2190	2445	2700	3360	3975	4200	4425	4650	4875
10 HT S		1875	2070	2580	3050	3220	3395	3565	3740

SIZE	Tread pattern	SW mm	OD mm	SLR mm	RC mm	SRI	Rim	Permitted Rims	Type	Tube
600/65R28 154D (151E)	**TM800 HS**	590	1491	660	4490	700	DW18L	W18L - DW20B	TUBELESS	16.9-28 TR218

PRESSURE									
psi	**6**	**9**	**12**	**17**	**23**	**26**	**29**	**32**	**35**
bar	**0,4**	**0,6**	**0,8**	**1,2**	**1,6**	**1,8**	**2,0**	**2,2**	**2,4**
MAX. LOAD kg									
70 S					2870	3015	3160	3305	3450
65 S					3150	3300	3450	3600	**3750**
50 S		2015	2230	2785	3310	3465	3625	3780	3940
40 S		2105	2325	2905	3450	3615	3780	3945	4110
30 S		2210	2440	3050	3625	3795	3970	4140	4315
10 LT S	2575	2880	3180	3975	4725	4950	5175	5400	5625
10 HT S		2210	2440	3050	3625	3795	3970	4140	4315

SIZE	Tread pattern	SW mm	OD mm	SLR mm	RC mm	SRI	Rim	Permitted Rims	Type	Tube
540/65R30 150D (147E)	**TM800 HS**	530	1464	665	4445	700	DW16L	W15L(°) - W16L - W18L DW15L(°) - DW18L	TUBELESS	18.4-30 TR218

PRESSURE									
psi	**6**	**9**	**12**	**17**	**23**	**26**	**29**	**32**	**35**
bar	**0,4**	**0,6**	**0,8**	**1,2**	**1,6**	**1,8**	**2,0**	**2,2**	**2,4**
MAX. LOAD kg									
70 S					2480	2630	2780	2930	3075
65 S					2725	2885	3040	3195	**3350**
50 S		1760	1945	2480	2865	3030	3190	3355	3520
40 S		1835	2030	2585	2985	3155	3330	3500	3670
30 S		1925	2130	2715	3135	3315	3495	3675	3855
10 LT S	2250	2515	2775	3540	4090	4325	4560	4795	5025
10 HT S		1925	2130	2715	3135	3315	3495	3675	3855

SIZE	Tread pattern	SW mm	OD mm	SLR mm	RC mm	SRI	Rim	Permitted Rims	Type	Tube
540/65R34 152D (149E)	**TM800 HS**	530	1566	710	4710	750	DW16L	W15L(°) - W16L - W18L DW15L(°) - DW18L	TUBELESS	16.9-34 TR218

PRESSURE									
psi	**6**	**9**	**12**	**17**	**23**	**26**	**29**	**32**	**35**
bar	**0,4**	**0,6**	**0,8**	**1,2**	**1,6**	**1,8**	**2,0**	**2,2**	**2,4**
MAX. LOAD kg									
70 S					2640	2795	2945	3100	3250
65 S					2900	3065	3225	3390	**3550**
50 S		1900	2100	2625	3045	3220	3390	3560	3730
40 S		1985	2190	2740	3180	3355	3535	3710	3890
30 S		2085	2300	2875	3335	3525	3710	3900	4085
10 LT S	2430	2715	3000	3750	4350	4595	4840	5085	5325
10 HT S		2085	2300	2875	3335	3525	3710	3900	4085

SIZE	Tread pattern	SW mm	OD mm	SLR mm	RC mm	SRI	Rim	Permitted Rims	Type	Tube
600/65R34 157D (154E)	**TM800 HS**	600	1660	745	4965	775	DW20B	DW18L - W18L	TUBELESS	

PRESSURE								
psi	**9**	**12**	**14**	**17**	**20**	**23**	**29**	**35**
bar	**0,6**	**0,8**	**1,0**	**1,2**	**1,4**	**1,6**	**2,0**	**2,4**
MAX. LOAD kg								
70S						3115	3450	3750
65S						3425	3795	**4125**
50 S	2080	2430	2730	3035	3340	3595	3985	4335
40 S	2170	2530	2850	3165	3480	3750	4160	4520
30 S	2280	2660	2990	3325	3655	3940	4365	4745
10 LT S	2970	3465	3900	4335	4765	5140	5695	6190
10 HT S	2280	2660	2990	3325	3655	3940	4365	4745

SIZE	Tread pattern	SW mm	OD mm	SLR mm	RC mm	SRI	Rim	Permitted Rims	Type	Tube
540/65R38 153D (150E)	**TM800 HS**	516	1709	760	5181	800	DW16L	W15L(°) - W16L - W18L DW15L(°) - DW18L	TUBELESS	18.4-38 TR218

PRESSURE								
psi	**9**	**12**	**14**	**17**	**20**	**23**	**29**	**35**
bar	**0,6**	**0,8**	**1,0**	**1,2**	**1,4**	**1,6**	**2,0**	**2,4**
MAX. LOAD kg								
70 S						2725	3090	3350
65 S						3000	3395	**3650**
50 S	1800	2110	2415	2685	2950	3150	3565	3875
40 S	1880	2200	2520	2800	3075	3315	3715	4000
30 S	1975	2310	2645	2940	3230	3450	3905	4250
10 LT S	2575	3010	3450	3835	4215	4500	5090	5450
10 HT S	1975	2310	2645	2940	3230	3450	3905	4250

SIZE	Tread pattern	SW mm	OD mm	SLR mm	RC mm	SRI	Rim	Permitted Rims	Type	Tube
650/65R38 163D (159E)	**TM800 HS**	645	1811	815	5450	875	DW20B	W18L(°) - DW18L(°)	TUBELESS	20.8-38 TR218

PRESSURE									
psi	**6**	**9**	**12**	**17**	**23**	**26**	**29**	**32**	**35**
bar	**0,4**	**0,6**	**0,8**	**1,2**	**1,6**	**1,8**	**2,0**	**2,2**	**2,4**
MAX. LOAD kg									
70 S					3755	3910	4065	4220	4375
65 S					4125	4315	4500	4620	**4875**
50 S		2660	2940	3625	4335	4530	4725	4925	5120
40 S		2775	3070	3780	4520	4725	4930	5135	5340
30 S		2915	3220	3970	4745	4960	5175	5395	5610
10 LT S	3400	3800	4200	5175	6190	6470	6750	7035	7315
10 HT S		2915	3220	3970	4745	4960	5175	5395	5610

SIZE	Tread pattern	SW mm	OD mm	SLR mm	RC mm	SRI	Rim	Permitted Rims	Type	Tube
650/65R38 166D (169A8)	**TM800 HS**	657	1818	823	5480	875	DW20B		TUBELESS	20.8-38 TR218

PRESSURE								
psi	**12**	**14**	**17**	**20**	**23**	**29**	**35**	**41**
bar	**0,8**	**1,0**	**1,2**	**1,4**	**1,6**	**2,0**	**2,4**	**2,8**
MAX. LOAD kg								
65 S					3975	4400	4930	**5300**
50 S	2650	3100	3550	3945	4225	4675	5240	5630
40 S	2735	3195	3665	4070	4360	4825	5405	5840
30 S	2905	3395	3890	4320	4630	5125	5740	6170
10 LT S	3370	3940	4510	5010	5370	5940	6660	7155
10 HT S	2905	3395	3890	4320	4630	5125	5740	6170

SIZE	Tread pattern	SW mm	OD mm	SLR mm	RC mm	SRI	Rim	Permitted Rims	Type	Tube
710/70R38 171D (168E)	**TM800 HS**	711	1973	884	5928	925	DW23B		TUBELESS	

PRESSURE								
psi	**9**	**12**	**14**	**17**	**20**	**23**	**29**	**35**
bar	**0,6**	**0,8**	**1,0**	**1,2**	**1,4**	**1,6**	**2,0**	**2,4**
MAX. LOAD kg								
70 S						4875	5260	5600
65 S						5300	5780	**6150**
50 S	3035	3485	4005	4520	5035	5600	6070	6500
40 S	3165	3635	4175	4715	5255	5800	6330	6700
30 S	3325	3820	4385	4950	5515	6150	6650	7100
10 LT S	4335	4980	5720	6460	7195	8000	8670	9225
10 HT S	3325	3820	4385	4950	5515	6150	6650	7100

For technical notes about pressure tables please refer to page 244.

TM700 ProgressiveTraction®

BLUE TIRE TECHNOLOGY

The new TM700 ProgressiveTraction® tread pattern is characterised by a special double lug operating on the soil, which releases higher traction when and where it is needed. Designed according to BLUE TIRE Technology, the TM700 ProgressiveTraction® meets the requirements of tractors from 100 hp to 240 hp, increasing tire efficiency whilst assuring high productivity.

SIZE	
380/70R28	127D
420/70R28	133D
480/70R28	140D
480/70R30	141D
480/70R34	143A8 (143B)
480/70R34	155A8 (155B)

SIZE	
480/70R38	145D
520/70R38	150D
580/70R38	155D
580/70R42	158D
620/70R42	166D

SIZE	Tread pattern	SW mm	OD mm	SLR mm	RC mm	SRI	Rim	Permitted Rims	Type	Tube
380/70R28 127D	TM700 ProgressiveTraction®	370	1300	585	3880	625	W12	W11 - W13 - DW11 DW12 - DW13	TUBELESS	12.4-28 TR218

PRESSURE									H (*)
psi	9	12	14	17	20	23	26	28	30
bar	0,6	0,8	1,0	1,2	1,4	1,6	1,8	1,9	2,1
MAX. LOAD kg									
65 S	965	1120	1280	1435	1595	**1750**			
50 S	1015	1180	1345	1510	1675	1840			
40 S	1055	1230	1400	1575	1745	1920			
30 S	1110	1290	1470	1655	1835	2015			
10 LT S	1310	1525	1740	1955	2170	2380	2545	2625	2975
10 HT S	1110	1290	1470	1655	1835	2015			

SIZE	Tread pattern	SW mm	OD mm	SLR mm	RC mm	SRI	Rim	Permitted Rims	Type	Tube
420/70R28 133D	**TM700** ProgressiveTraction®	415	1355	610	4070	650	W13	W12-W14L-DW12 DW13-DW14L	TUBELESS	16.9-28 TR218

PRESSURE									H (*)
psi	**9**	**12**	**14**	**17**	**20**	**23**	**26**	**28**	**30**
bar	**0,6**	**0,8**	**1,0**	**1,2**	**1,4**	**1,6**	**1,8**	**1,9**	**2,1**
MAX. LOAD kg									
65 S	1135	1320	1505	1690	1875	**2060**			
50 S	1190	1385	1580	1775	1970	2165			
40 S	1245	1445	1650	1850	2055	2260			
30 S	1305	1520	1730	1945	2160	2370			
10 LT S	1545	1795	2050	2300	2550	2805	2995	3090	3505
10 HT S	1305	1520	1730	1945	2160	2370			

SIZE	Tread pattern	SW mm	OD mm	SLR mm	RC mm	SRI	Rim	Permitted Rims	Type	Tube
480/70R28 140D	**TM700** ProgressiveTraction®	480	1430	640	4255	675	W15L	W14L-W16L-DW14L DW15L-DW16L	TUBELESS	16.9-28 TR218

PRESSURE									H (*)
psi	**9**	**12**	**14**	**17**	**20**	**23**	**26**	**28**	**30**
bar	**0,6**	**0,8**	**1,0**	**1,2**	**1,4**	**1,6**	**1,8**	**1,9**	**2,1**
MAX. LOAD kg									
65 S	1375	1600	1825	2050	2275	**2500**			
50 S	1445	1680	1920	2155	2390	2625			
40 S	1510	1755	2000	2245	2495	2740			
30 S	1585	1840	2100	2360	2620	2875			
10 LT S	1870	2180	2485	2790	3095	3400	3635	3750	4250
10 HT S	1585	1840	2100	2360	2620	2875			

SIZE	Tread pattern	SW mm	OD mm	SLR mm	RC mm	SRI	Rim	Permitted Rims	Type	Tube
480/70R30 141D	**TM700** ProgressiveTraction®	475	1485	655	4450	700	W15L	W14L - W16L - DW14L DW15L - DW16L	TUBELESS	18.4-30 TR218

PRESSURE									H (*)
psi	**9**	**12**	**14**	**17**	**20**	**23**	**26**	**28**	**30**
bar	**0,6**	**0,8**	**1,0**	**1,2**	**1,4**	**1,6**	**1,8**	**1,9**	**2,1**
MAX. LOAD kg									
65 S	1420	1650	1880	2115	2345	**2575**			
50 S	1490	1735	1975	2220	2465	2705			
40 S	1555	1805	2060	2315	2570	2820			
30 S	1630	1900	2165	2430	2695	2965			
10 LT S	1930	2245	2560	2875	3190	3505	3745	3865	4380
10 HT S	1630	1900	2165	2430	2695	2965			

SIZE	Tread pattern	SW mm	OD mm	SLR mm	RC mm	SRI	Rim	Permitted Rims	Type	Tube
480/70R34 143A8 (143B)	**TM700** ProgressiveTraction®	475	1585	716	4760	750	W15L	W14L - W16L - DW14L DW15L - DW16L	TUBELESS	16.9-34 TR218

PRESSURE										H (*)
psi	**6**	**9**	**12**	**15**	**17**	**20**	**23**	**26**	**28**	**30**
bar	**0,4**	**0,6**	**0,8**	**1**	**1,2**	**1,4**	**1,6**	**1,8**	**1,9**	**2,1**
MAX. LOAD kg										
50 S		1790	1980	2170	2360	2540	2725			
40 S		1790	1980	2170	2360	2540	**2725**			
30 S		1920	2120	2320	2520	2720	2920			
10 LT S	2180	2440	2690	2950	3200	3460	3720	3980	4100	4640
10 HT S		1920	2120	2320	2520	2720	2920			

SIZE	Tread pattern	SW mm	OD mm	SLR mm	RC mm	SRI	Rim	Permitted Rims	Type	Tube
480/70R34 155A8 (155B)	**TM700** ProgressiveTraction®	475	1580	727	4775	750	W15L	W14L - W16L - DW14L DW15L - DW16L	TUBELESS	16.9-34 TR218

PRESSURE										H (*)
psi	**12**	**14**	**17**	**20**	**23**	**29**	**35**	**41**	**46**	**49**	**55**
bar	**0,8**	**1,0**	**1,2**	**1,4**	**1,6**	**2,0**	**2,4**	**2,8**	**3,2**	**3,4**	**3,8**
MAX. LOAD kg											
50 S	1785	2055	2290	2560	2790	3065	3295	3605	3875		
40 S	1785	2055	2290	2560	2790	3065	3295	3605	**3875**		
30 S	1910	2200	2455	2740	2990	3280	3530	3860	4150		
10 LT S	2210	2545	2920	3345	3695	4295	4635	5070	5350	5600	5815
10 HT S	1910	2200	2455	2740	2990	3280	3530	3860	4150		

SIZE	Tread pattern	SW mm	OD mm	SLR mm	RC mm	SRI	Rim	Permitted Rims	Type	Tube
480/70R38 145D	**TM700** ProgressiveTraction®	490	1690	755	5050	800	W15L	W14L - W16L - DW14L DW15L - DW16L	TUBELESS	18.4-38 TR218

PRESSURE									H (*)
psi	**9**	**12**	**14**	**17**	**20**	**23**	**26**	**28**	**30**
bar	**0,6**	**0,8**	**1,0**	**1,2**	**1,4**	**1,6**	**1,8**	**1,9**	**2,1**
MAX. LOAD kg									
65 S	1595	1860	2120	2380	2640	**2900**			
50 S	1675	1950	2225	2500	2775	3045			
40 S	1750	2035	2320	2605	2890	3180			
30 S	1835	2135	2435	2735	3035	3335			
10 LT S	2170	2525	2880	3235	3590	3945	4220	4350	4930
10 HT S	1835	2135	2435	2735	3035	3335			

SIZE	Tread pattern	SW mm	OD mm	SLR mm	RC mm	SRI	Rim	Permitted Rims	Type	Tube
520/70R38 150D	**TM700** ProgressiveTraction®	525	1755	790	5255	825	W16L	W15L-W18L-DW15L DW16L-DW18L	TUBELESS	18.4-38 TR218

PRESSURE									H (*)
psi	**9**	**12**	**14**	**17**	**20**	**23**	**26**	**28**	**30**
bar	**0,6**	**0,8**	**1,0**	**1,2**	**1,4**	**1,6**	**1,8**	**1,9**	**2,1**
MAX. LOAD kg									
65 S	1845	2145	2450	2750	3050	**3350**			
50 S	1935	2255	2570	2885	3205	3520			
40 S	2020	2350	2680	3010	3340	3670			
30 S	2120	2470	2815	3160	3510	3855			
10 LT S	2510	2920	3330	3740	4150	4560	4875	5025	5695
10 HT S	2120	2470	2815	3160	3510	3855			

SIZE	Tread pattern	SW mm	OD mm	SLR mm	RC mm	SRI	Rim	Permitted Rims	Type	Tube
580/70R38 155D	**TM700** ProgressiveTraction®	590	1835	820	5455	875	W18L	DW18L	TUBELESS	20.8-38 TR218

PRESSURE									H (*)
psi	**9**	**12**	**14**	**17**	**20**	**23**	**26**	**28**	**30**
bar	**0,6**	**0,8**	**1,0**	**1,2**	**1,4**	**1,6**	**1,8**	**1,9**	**2,1**
MAX. LOAD kg									
65 S	2135	2480	2830	3180	3530	**3875**			
50 S	2240	2605	2975	3340	3705	4070			
40 S	2335	2720	3100	3480	3865	4245			
30 S	2455	2855	3255	3655	4060	4460			
10 LT S	2900	3375	3850	4325	4800	5270	5635	5815	6590
10 HT S	2455	2855	3255	3655	4060	4460			

SIZE	Tread pattern	SW mm	OD mm	SLR mm	RC mm	SRI	Rim	Permitted Rims	Type	Tube
580/70R42 158D	**TM700** ProgressiveTraction®	585	1905	850	5695	925	W18L	DW18L	TUBELESS	20.8-42 TR218

PRESSURE									H (*)
psi	**9**	**12**	**14**	**17**	**20**	**23**	**26**	**28**	**30**
bar	**0,6**	**0,8**	**1,0**	**1,2**	**1,4**	**1,6**	**1,8**	**1,9**	**2,1**
MAX. LOAD kg									
65 S	2340	2720	3105	3485	3870	**4250**			
50 S	2455	2860	3260	3660	4065	4465			
40 S	2560	2980	3400	3820	4235	4655			
30 S	2690	3130	3570	4010	4450	4890			
10 LT S	3180	3700	4220	4740	5260	5780	6180	6375	7225
10 HT S	2690	3130	3570	4010	4450	4890			

SIZE	Tread pattern	SW mm	OD mm	SLR mm	RC mm	SRI	Rim	Permitted Rims	Type	Tube
620/70R42 166D	**TM700** ProgressiveTraction®	630	1930	870	5820	925	DW20B	DW18L - W18L	TUBELESS	

PRESSURE											**H (*)**
psi	**9**	**12**	**14**	**17**	**20**	**23**	**29**	**35**	**41**	**42**	**44**
bar	**0,6**	**0,8**	**1,0**	**1,2**	**1,4**	**1,6**	**2,0**	**2,4**	**2,8**	**2,9**	**3,0**
MAX. LOAD kg											
65 S	2495	2865	3290	3710	4135	4560	4985	**5300**			
50 S	2620	3010	3455	3900	4345	4790	5235	5565			
40 S	2730	3135	3600	4065	4530	4995	5460	5805			
30 S	2865	3295	3780	4270	4755	5245	5730	6095			
10 LT S	3390	3895	4470	5050	5625	6200	6780	7210	7715	7950	9010
10 HT S	2865	3295	3780	4270	4755	5245	5730	6095			

For technical notes about pressure tables please refer to page 244.

TM700

Line in /70 series, very well known for its performance and versatility, capable of optimising the tractors efficiency during its whole life cycle.
Product Plus:
- Maximum self-cleaning
- Excellent traction
- High level of handling and comfort on the road

SIZE		
300/70R20	110A8	(110B)
320/70R20	113A8	(113B)
360/70R20	120A8	(120B)
380/70R20	122A8	(122B)
320/70R24	116A8	(116B)
360/70R24	122A8	(122B)
380/70R24	125A8	(125B)
420/70R24	130A8	(130B)
480/70R24	138A8	(138B)
480/70R26	139A8	(139B)
320/70R28	119A8	(119B)
360/70R28	125A8	(125B)
380/70R28	127A8	(127B)

SIZE		
420/70R28	133D	
480/70R28	140D	
480/70R28	145D	(148A8)
420/70R30	134A8	(134B)
480/70R30	141D	
520/70R30	145A8	(145B)
480/70R34	143A8	(143B)
520/70R34	148A8	(148B)
480/70R38	145A8	(145B)
520/70R38	150D	
580/70R38	155D	
580/70R42	158D	
620/70R42	166D	

SIZE	Tread pattern	SW mm	OD mm	SLR mm	RC mm	SRI	Rim	Permitted Rims	Type	Tube
300/70R20 110A8 (110B)	TM700	286	945	429	2805	450	W9	W10 - DW10	TUBELESS	9.5-20 TR218

PRESSURE										H (*)
psi	6	9	12	14	17	20	23	26	28	30
bar	0,4	0,6	0,8	1,0	1,2	1,4	1,6	1,8	1,9	2,1
MAX. LOAD kg										
50 S		695	770	840	915	990	1060			
40 S		695	770	840	915	990	**1060**			
30 S		750	825	905	985	1060	1140			
10 LT S	845	945	1050	1150	1250	1340	1440	1540	1590	1800
10 HT S		750	825	905	985	1060	1140			

SIZE	Tread pattern	SW mm	OD mm	SLR mm	RC mm	SRI	Rim	Permitted Rims	Type	Tube
320/70R20 113A8 (113B)	**TM700**	318	975	439	2905	475	W10	W9 - W11 - DW10 DW11	TUBELESS	11.2-20 TR218

PRESSURE										H (*)
psi	**6**	**9**	**12**	**14**	**17**	**20**	**23**	**26**	**28**	**30**
bar	**0,4**	**0,6**	**0,8**	**1,0**	**1,2**	**1,4**	**1,6**	**1,8**	**1,9**	**2,1**
MAX. LOAD kg										
50 S		755	835	915	995	1070	1150			
40 S		755	835	915	995	1070	**1150**			
30 S		805	890	975	1060	1150	1230			
10 LT S	920	1030	1140	1250	1350	1460	1570	1680	1730	1960
10 HT S		805	890	975	1060	1150	1230			

SIZE	Tread pattern	SW mm	OD mm	SLR mm	RC mm	SRI	Rim	Permitted Rims	Type	Tube
360/70R20 120A8 (120B)	**TM700**	352	1038	464	3100	500	W11	W10 - W12 - DW10 DW11 - DW12	TUBELESS	11.2-20 TR218

PRESSURE										H (*)
psi	**6**	**9**	**12**	**14**	**17**	**20**	**23**	**26**	**28**	**30**
bar	**0,4**	**0,6**	**0,8**	**1,0**	**1,2**	**1,4**	**1,6**	**1,8**	**1,9**	**2,1**
MAX. LOAD kg										
50 S		920	1020	1110	1210	1310	1400			
40 S		920	1020	1110	1210	1310	**1400**			
30 S		985	1090	1190	1300	1400	1500			
10 LT S	1120	1250	1380	1510	1640	1770	1910	2040	2100	2380
10 HT S		985	1090	1190	1300	1400	1500			

SIZE	Tread pattern	SW mm	OD mm	SLR mm	RC mm	SRI	Rim	Permitted Rims	Type	Tube
380/70R20 122A8 (122B)	**TM700**	370	1088	485	3240	525	W12	W11 - W13 - DW11 DW12 - DW13	TUBELESS	14.5/80-20 TR15

PRESSURE										H (*)
psi	**6**	**9**	**12**	**14**	**17**	**20**	**23**	**26**	**28**	**30**
bar	**0,4**	**0,6**	**0,8**	**1,0**	**1,2**	**1,4**	**1,6**	**1,8**	**1,9**	**2,1**
MAX. LOAD kg										
50 S		985	1090	1190	1300	1400	1500			
40 S		985	1090	1190	1300	1400	**1500**			
30 S		1060	1170	1280	1390	1500	1610			
10 LT S	1200	1340	1480	1620	1760	1900	2040	2180	2250	2550
10 HT S		1060	1170	1280	1390	1500	1610			

SIZE	Tread pattern	SW mm	OD mm	SLR mm	RC mm	SRI	Rim	Permitted Rims	Type	Tube
320/70R24 116A8 (116B)	**TM700**	316	1099	508	3300	525	W10	W9 - W11 DW10 - DW11	TUBELESS	11.2-24 TR218

PRESSURE										**H (*)**
psi	**6**	**9**	**12**	**14**	**17**	**20**	**23**	**26**	**28**	**30**
bar	**0,4**	**0,6**	**0,8**	**1,0**	**1,2**	**1,4**	**1,6**	**1,8**	**1,9**	**2,1**
MAX. LOAD kg										
50 S		820	905	995	1080	1170	1250			
40 S		820	905	995	1080	1170	**1250**			
30 S		880	970	1070	1160	1250	1340			
10 LT S	1000	1120	1240	1350	1470	1590	1710	1820	1880	2130
10 HT S		880	970	1070	1160	1250	1340			

SIZE	Tread pattern	SW mm	OD mm	SLR mm	RC mm	SRI	Rim	Permitted Rims	Type	Tube
360/70R24 122A8 (122B)	**TM700**	352	1147	518	3425	550	W11	W10 - W12 - DW10 DW11 - DW12	TUBELESS	13.6-24 TR218

PRESSURE										**H (*)**
psi	**6**	**9**	**12**	**14**	**17**	**20**	**23**	**26**	**28**	**30**
bar	**0,4**	**0,6**	**0,8**	**1,0**	**1,2**	**1,4**	**1,6**	**1,8**	**1,9**	**2,1**
MAX. LOAD kg										
50 S		985	1090	1190	1300	1400	1500			
40 S		985	1090	1190	1300	1400	**1500**			
30 S		1060	1170	1280	1390	1500	1610			
10 LT S	1200	1340	1480	1620	1760	1900	2040	2180	2250	2550
10 HT S		1060	1170	1280	1390	1500	1610			

SIZE	Tread pattern	SW mm	OD mm	SLR mm	RC mm	SRI	Rim	Permitted Rims	Type	Tube
380/70R24 125A8 (125B)	**TM700**	370	1193	538	3560	575	W12	W11 - W13 - DW11 DW12 - DW13	TUBELESS	14.9-24 TR218

PRESSURE										**H (*)**
psi	**6**	**9**	**12**	**14**	**17**	**20**	**23**	**26**	**28**	**30**
bar	**0,4**	**0,6**	**0,8**	**1,0**	**1,2**	**1,4**	**1,6**	**1,8**	**1,9**	**2,1**
MAX. LOAD kg										
50 S		1080	1200	1310	1430	1540	1650			
40 S		1080	1200	1310	1430	1540	**1650**			
30 S		1160	1280	1410	1530	1650	1770			
10 LT S	1320	1480	1630	1790	1940	2100	2250	2410	2480	2810
10 HT S		1160	1280	1410	1530	1650	1770			

SIZE	Tread pattern	SW mm	OD mm	SLR mm	RC mm	SRI	Rim	Permitted Rims	Type	Tube
420/70R24 130A8 (130B)	**TM700**	415	1253	562	3705	600	W13	W12 - W14L - DW12 DW13 - DW14L	TUBELESS	16.9-24 TR218

PRESSURE										**H (*)**
psi	**6**	**9**	**12**	**14**	**17**	**20**	**23**	**26**	**28**	**30**
bar	**0,4**	**0,6**	**0,8**	**1,0**	**1,2**	**1,4**	**1,6**	**1,8**	**1,9**	**2,1**
MAX. LOAD kg										
50 S		1250	1380	1510	1640	1770	1900			
40 S		1250	1380	1510	1640	1770	**1900**			
30 S		1340	1480	1620	1760	1900	2040			
10 LT S	1520	1700	1870	2050	2230	2410	2590	2760	2850	3240
10 HT S		1340	1480	1620	1760	1900	2040			

SIZE	Tread pattern	SW mm	OD mm	SLR mm	RC mm	SRI	Rim	Permitted Rims	Type	Tube
480/70R24 138A8 (138B)	**TM700**	468	1300	580	3875	625	W15L	W14L - W16L - DW14L DW15L - DW16L	TUBELESS	16.9-24 TR218

PRESSURE										**H (*)**
psi	**6**	**9**	**12**	**14**	**17**	**20**	**23**	**26**	**28**	**30**
bar	**0,4**	**0,6**	**0,8**	**1,0**	**1,2**	**1,4**	**1,6**	**1,8**	**1,9**	**2,1**
MAX. LOAD kg										
50 S		1550	1710	1870	2040	2200	2360			
40 S		1550	1710	1870	2040	2200	**2360**			
30 S		1660	1840	2010	2180	2360	2530			
10 LT S	1880	2100	2330	2550	2770	2990	3220	3440	3540	4020
10 HT S		1660	1840	2010	2180	2360	2530			

SIZE	Tread pattern	SW mm	OD mm	SLR mm	RC mm	SRI	Rim	Permitted Rims	Type	Tube
480/70R26 139A8 (139B)	**TM700**	468	1358	608	4060	650	W15L	W14L - W16L - DW14L DW15L - DW16L	TUBELESS	16.9-26 TR218

PRESSURE										**H (*)**
psi	**6**	**9**	**12**	**14**	**17**	**20**	**23**	**26**	**28**	**30**
bar	**0,4**	**0,6**	**0,8**	**1,0**	**1,2**	**1,4**	**1,6**	**1,8**	**1,9**	**2,1**
MAX. LOAD kg										
50 S		1600	1760	1930	2100	2270	2430			
40 S		1600	1760	1930	2100	2270	**2430**			
30 S		1710	1890	2070	2240	2420	2600			
10 LT S	1950	2180	2400	2630	2860	3100	3320	3560	3660	4140
10 HT S		1710	1890	2070	2240	2420	2600			

SIZE	Tread pattern	SW mm	OD mm	SLR mm	RC mm	SRI	Rim	Permitted Rims	Type	Tube
320/70R28 119A8 (119B)	**TM700**	316	1198	552	3605	575	W10	W9 - W11 - DW10 DW11	TUBELESS	12.4-28 TR218

PRESSURE										H (*)
psi	**6**	**9**	**12**	**14**	**17**	**20**	**23**	**26**	**28**	**30**
bar	**0,4**	**0,6**	**0,8**	**1,0**	**1,2**	**1,4**	**1,6**	**1,8**	**1,9**	**2,1**
MAX. LOAD kg										
50 S		895	985	1080	1180	1270	1360			
40 S		895	985	1080	1180	1270	**1360**			
30 S		960	1060	1160	1260	1360	1460			
10 LT S	1090	1210	1340	1470	1600	1720	1850	1980	2040	2310
10 HT S		960	1060	1160	1260	1360	1460			

According to availability

SIZE	Tread pattern	SW mm	OD mm	SLR mm	RC mm	SRI	Rim	Permitted Rims	Type	Tube
360/70R28 125A8 (125B)	**TM700**	352	1246	568	3745	600	W11	W10 - W12 - DW10 DW11 - DW12	TUBELESS	12.4-28 TR218

PRESSURE										H (*)
psi	**6**	**9**	**12**	**14**	**17**	**20**	**23**	**26**	**28**	**30**
bar	**0,4**	**0,6**	**0,8**	**1,0**	**1,2**	**1,4**	**1,6**	**1,8**	**1,9**	**2,1**
MAX. LOAD kg										
50 S		1080	1200	1310	1430	1540	1650			
40 S		1080	1200	1310	1430	1540	**1650**			
30 S		1160	1280	1410	1530	1650	1770			
10 LT S	1320	1480	1630	1790	1940	2100	2250	2410	2480	2810
10 HT S		1160	1280	1410	1530	1650	1770			

SIZE	Tread pattern	SW mm	OD mm	SLR mm	RC mm	SRI	Rim	Permitted Rims	Type	Tube
380/70R28 127A8 (127B)	**TM700**	370	1292	590	3895	625	W12	W11 - W13 - DW11 DW12 - DW13	TUBELESS	12.4-28 TR218

PRESSURE										H (*)
psi	**6**	**9**	**12**	**14**	**17**	**20**	**23**	**26**	**28**	**30**
bar	**0,4**	**0,6**	**0,8**	**1,0**	**1,2**	**1,4**	**1,6**	**1,8**	**1,9**	**2,1**
MAX. LOAD kg										
50 S		1150	1270	1390	1510	1630	1750			
40 S		1150	1270	1390	1510	1630	**1750**			
30 S		1230	1360	1490	1620	1750	1880			
10 LT S	1400	1560	1730	1890	2060	2220	2390	2550	2630	2980
10 HT S		1230	1360	1490	1620	1750	1880			

SIZE	Tread pattern	SW mm	OD mm	SLR mm	RC mm	SRI	Rim	Permitted Rims	Type	Tube
420/70R28 133D	**TM700**	415	1354	608	4025	650	W13	W12 - W14L - DW12 DW13 - DW14L	TUBELESS	16.9-28 TR218

PRESSURE									**H (*)**
psi	**9**	**12**	**14**	**17**	**20**	**23**	**26**	**28**	**30**
bar	**0,6**	**0,8**	**1,0**	**1,2**	**1,4**	**1,6**	**1,8**	**1,9**	**2,1**
MAX. LOAD kg									
65 S	1135	1320	1505	1690	1875	**2060**			
50 S	1190	1385	1580	1775	1970	2165			
40 S	1245	1445	1650	1850	2055	2260			
30 S	1305	1520	1730	1945	2160	2370			
10 LT S	1545	1795	2050	2300	2550	2805	2995	3090	3505
10 HT S	1305	1520	1730	1945	2160	2370			

SIZE	Tread pattern	SW mm	OD mm	SLR mm	RC mm	SRI	Rim	Permitted Rims	Type	Tube
480/70R28 140D	**TM700**	468	1415	636	4190	675	W15L	W14L - W16L - DW14L DW15L - DW16L	TUBELESS	16.9-28 TR218

PRESSURE									**H (*)**
psi	**9**	**12**	**14**	**17**	**20**	**23**	**26**	**28**	**30**
bar	**0,6**	**0,8**	**1,0**	**1,2**	**1,4**	**1,6**	**1,8**	**1,9**	**2,1**
MAX. LOAD kg									
65 S	1375	1600	1825	2050	2275	**2500**			
50 S	1445	1680	1920	2155	2390	2625			
40 S	1510	1755	2000	2245	2495	2740			
30 S	1585	1840	2100	2360	2620	2875			
10 LT S	1870	2180	2485	2790	3095	3400	3635	3750	4250
10 HT S	1585	1840	2100	2360	2620	2875			

SIZE	Tread pattern	SW mm	OD mm	SLR mm	RC mm	SRI	Rim	Permitted Rims	Type	Tube
480/70R28 145D (148A8)	**TM700**	468	1415	636	4240	675	W15L	W14L - W16L	TUBELESS	16.9-28 TR218

PRESSURE									**H (*)**
psi	**9**	**12**	**17**	**23**	**29**	**35**	**41**	**46**	
bar	**0,6**	**0,8**	**1,2**	**1,6**	**2,0**	**2,4**	**2,8**	**3,2**	
MAX. LOAD kg									
65 S	1625	1830	2170	2450	2685	**2900**			
50 S	1705	1925	2280	2570	2820	3045			
40 S	1780	2005	2375	2680	2940	3175			
30 S	1870	2105	2495	2815	3090	3335			
10 LT S	2285	2575	3055	3445	3780	4080	4350	5400	
10 HT S	1870	2105	2495	2815	3090	3335			

SIZE	Tread pattern	SW mm	OD mm	SLR mm	RC mm	SRI	Rim	Permitted Rims	Type	Tube
420/70R30 134A8 (134B)	**TM700**	415	1400	636	4204	675	W13	W12 - W14L - DW12L DW13L - DW14L	TUBELESS	14.9-30 TR218

PRESSURE										**H (*)**
psi	**6**	**9**	**12**	**14**	**17**	**20**	**23**	**26**	**28**	**30**
bar	**0,4**	**0,6**	**0,8**	**1,0**	**1,2**	**1,4**	**1,6**	**1,8**	**1,9**	**2,1**
MAX. LOAD kg										
50 S		1390	1540	1680	1830	1980	2120			
40 S		1390	1540	1680	1830	1980	**2120**			
30 S		1490	1650	1800	1960	2120	2270			
10 LT S	1690	1890	2090	2290	2490	2690	2880	3080	3180	3600
10 HT S		1490	1650	1800	1960	2120	2270			

SIZE	Tread pattern	SW mm	OD mm	SLR mm	RC mm	SRI	Rim	Permitted Rims	Type	Tube
480/70R30 141D	**TM700**	468	1474	667	4425	700	W15L	W14L - W16L - DW14L DW15L - DW16L	TUBELESS	18.4-30 TR218

PRESSURE									**H (*)**
psi	**9**	**12**	**14**	**17**	**20**	**23**	**26**	**28**	**30**
bar	**0,6**	**0,8**	**1,0**	**1,2**	**1,4**	**1,6**	**1,8**	**1,9**	**2,1**
MAX. LOAD kg									
65 S	1420	1650	1880	2115	2345	**2575**			
50 S	1490	1735	1975	2220	2465	2705			
40 S	1555	1805	2060	2315	2570	2820			
30 S	1630	1900	2165	2430	2695	2965			
10 LT S	1930	2245	2560	2875	3190	3505	3745	3865	4380
10 HT S	1630	1900	2165	2430	2695	2965			

SIZE	Tread pattern	SW mm	OD mm	SLR mm	RC mm	SRI	Rim	Permitted Rims	Type	Tube
520/70R30 145A8 (145B)	**TM700**	520	1535	680	4590	725	W16L	W15L - W18L - DW15L DW16L - DW18L	TUBELESS	18.4-30 TR218

PRESSURE										**H (*)**
psi	**6**	**9**	**12**	**14**	**17**	**20**	**23**	**26**	**28**	**30**
bar	**0,4**	**0,6**	**0,8**	**1,0**	**1,2**	**1,4**	**1,6**	**1,8**	**1,9**	**2,1**
MAX. LOAD kg										
50 S		1900	2100	2300	2500	2700	2900			
40 S		1900	2100	2300	2500	2700	**2900**			
30 S		2030	2250	2460	2680	2890	3100			
10 LT S	2320	2590	2860	3140	3420	3680	3960	4220	4360	4940
10 HT S		2030	2250	2460	2680	2890	3100			

SIZE	Tread pattern	SW mm	OD mm	SLR mm	RC mm	SRI	Rim	Permitted Rims	Type	Tube
480/70R34 143A8 (143B)	**TM700**	468	1580	716	4720	750	W15L	W14L - W16L - DW14L DW15L - DW16L	TUBELESS	16.9-34 TR218

PRESSURE										**H (*)**
psi	**6**	**9**	**12**	**14**	**17**	**20**	**23**	**26**	**28**	**30**
bar	**0,4**	**0,6**	**0,8**	**1,0**	**1,2**	**1,4**	**1,6**	**1,8**	**1,9**	**2,1**
MAX. LOAD kg										
50 S		1790	1980	2170	2360	2540	2725			
40 S		1790	1980	2170	2360	2540	**2725**			
30 S		1920	2120	2320	2520	2720	2920			
10 LT S	2180	2440	2690	2950	3200	3460	3720	3980	4100	4640
10 HT S		1920	2120	2320	2520	2720	2920			

SIZE	Tread pattern	SW mm	OD mm	SLR mm	RC mm	SRI	Rim	Permitted Rims	Type	Tube
520/70R34 148A8 (148B)	**TM700**	520	1638	728	4875	775	W16L	W15L - W18L DW15L - DW16L	TUBELESS	16.9-34 TR218

PRESSURE										**H (*)**
psi	**6**	**9**	**12**	**14**	**17**	**20**	**23**	**26**	**28**	**30**
bar	**0,4**	**0,6**	**0,8**	**1,0**	**1,2**	**1,4**	**1,6**	**1,8**	**1,9**	**2,1**
MAX. LOAD kg										
50 S		2070	2290	2510	2730	2950	3150			
40 S		2070	2290	2510	2730	2950	**3150**			
30 S		2220	2450	2680	2920	3160	3380			
10 LT S	2520	2820	3120	3420	3700	4000	4300	4600	4740	5360
10 HT S		2220	2450	2680	2920	3160	3380			

SIZE	Tread pattern	SW mm	OD mm	SLR mm	RC mm	SRI	Rim	Permitted Rims	Type	Tube
480/70R38 145A8 (145B)	**TM700**	468	1684	760	5055	800	W15L	W14L - W16L - DW14L DW15L - DW16L	TUBELESS	18.4-38 TR218

PRESSURE										**H (*)**
psi	**6**	**9**	**12**	**14**	**17**	**20**	**23**	**26**	**28**	**30**
bar	**0,4**	**0,6**	**0,8**	**1,0**	**1,2**	**1,4**	**1,6**	**1,8**	**1,9**	**2,1**
MAX. LOAD kg										
50 S		1900	2100	2300	2500	2700	2900			
40 S		1900	2100	2300	2500	2700	**2900**			
30 S		2030	2250	2460	2680	2890	3100			
10 LT S	2320	2590	2860	3140	3420	3680	3960	4220	4360	4940
10 HT S		2030	2250	2460	2680	2890	3100			

SIZE	Tread pattern	SW mm	OD mm	SLR mm	RC mm	SRI	Rim	Permitted Rims	Type	Tube
520/70R38 150D	**TM700**	520	1740	774	5150	825	W16L	W15L - W18L - DW15L DW16L - DW18L	TUBELESS	18.4-38 TR218

PRESSURE									**H (*)**
psi	**9**	**12**	**14**	**17**	**20**	**23**	**26**	**28**	**30**
bar	**0,6**	**0,8**	**1,0**	**1,2**	**1,4**	**1,6**	**1,8**	**1,9**	**2,1**
MAX. LOAD kg									
65 S	1845	2145	2450	2750	3050	**3350**			
50 S	1935	2255	2570	2885	3205	3520			
40 S	2020	2350	2680	3010	3340	3670			
30 S	2120	2470	2815	3160	3510	3855			
10 LT S	2510	2920	3330	3740	4150	4560	4875	5025	5695
10 HT S	2120	2470	2815	3160	3510	3855			

SIZE	Tread pattern	SW mm	OD mm	SLR mm	RC mm	SRI	Rim	Permitted Rims	Type	Tube
580/70R38 155D	**TM700**	584	1825	822	5380	875	W18L	DW18L	TUBELESS	20.8-38 TR218

PRESSURE									**H (*)**
psi	**9**	**12**	**14**	**17**	**20**	**23**	**26**	**28**	**30**
bar	**0,6**	**0,8**	**1,0**	**1,2**	**1,4**	**1,6**	**1,8**	**1,9**	**2,1**
MAX. LOAD kg									
65 S	2135	2480	2830	3180	3530	**3875**			
50 S	2240	2605	2975	3340	3705	4070			
40 S	2335	2720	3100	3480	3865	4245			
30 S	2455	2855	3255	3655	4060	4460			
10 LT S	2900	3375	3850	4325	4800	5270	5635	5815	6590
10 HT S	2455	2855	3255	3655	4060	4460			

SIZE	Tread pattern	SW mm	OD mm	SLR mm	RC mm	SRI	Rim	Permitted Rims	Type	Tube
580/70R42 158D	**TM700**	584	1908	864	5690	925	W18L	DW18L	TUBELESS	20.8-42 TR218

PRESSURE									**H (*)**
psi	**9**	**12**	**14**	**17**	**20**	**23**	**26**	**28**	**30**
bar	**0,6**	**0,8**	**1,0**	**1,2**	**1,4**	**1,6**	**1,8**	**1,9**	**2,1**
MAX. LOAD kg									
65 S	2340	2720	3105	3485	3870	**4250**			
50 S	2455	2860	3260	3660	4065	4465			
40 S	2560	2980	3400	3820	4235	4655			
30 S	2690	3130	3570	4010	4450	4890			
10 LT S	3180	3700	4220	4740	5260	5780	6180	6375	7225
10 HT S	2690	3130	3570	4010	4450	4890			

SIZE	Tread pattern	SW mm	OD mm	SLR mm	RC mm	SRI	Rim	Permitted Rims	Type	Tube
620/70R42 166D	**TM700**	625	1935	871	5855	925	DW20B	DW18L - W18L	TUBELESS	

PRESSURE											**H (*)**
psi	**9**	**12**	**14**	**17**	**20**	**23**	**29**	**35**	**41**	**42**	**43**
bar	**0,6**	**0,8**	**1,0**	**1,2**	**1,4**	**1,6**	**2,0**	**2,4**	**2,8**	**2,9**	**3,0**
MAX. LOAD kg											
65 S	2495	2865	3290	3710	4135	4560	4985	**5300**			
50 S	2620	3010	3455	3900	4345	4790	5235	5565			
40 S	2730	3135	3600	4065	4530	4995	5460	5805			
30 S	2865	3295	3780	4270	4755	5245	5730	6095			
10 LT S	3390	3895	4470	5050	5625	6200	6780	7210	7715	7950	9010
10 HT S	2865	3295	3780	4270	4755	5245	5730	6095			

For technical notes about pressure tables please refer to page 244.

TM700

Radial tire designed for orchards and vineyard work, it equips medium-to-low horsepower tractors with both front and rear drive wheels. Thanks to its tested radial structure, it solves the yield problems resulting from the traditional use of the cross-ply sizes on these tractors.

SIZE		
240/70R16	**104A8**	**(104B)**
260/70R16	**109A8**	**(109B)**
280/70R16	**112A8**	**(112B)**

SIZE		
280/70R18	**114A8**	**(114B)**
280/70R20	**116A8**	**(116B)**

SIZE	Tread pattern	SW mm	OD mm	SLR mm	RC mm	SRI	Rim	Permitted Rims	Type	Tube
240/70R16 104A8 (104B)	**TM700**	244	742	340	2195	350	W8	W8L - W9	TUBELESS	7.50-16 TR15

PRESSURE										H (*)
psi	**6**	**9**	**12**	**17**	**23**	**29**	**35**	**41**	**42**	**43**
bar	**0,4**	**0,6**	**0,8**	**1,2**	**1,6**	**2,0**	**2,4**	**2,8**	**2,9**	**3,0**
MAX. LOAD kg										
50 S		425	490	630	775	850	900			
40 S		425	490	630	775	850	**900**			
30 S		455	525	675	830	910	965			
10 LT S	555	620	685	815	945	1070	1195	1320	1350	1530
10 HT S		455	525	675	830	910	965			

SIZE	Tread pattern	SW mm	OD mm	SLR mm	RC mm	SRI	Rim	Permitted Rims	Type	Tube
260/70R16 109A8 (109B)	**TM700**	258	770	340	2310	360	W8	W8L - W9	TUBELESS	9.00-16 TR15

PRESSURE										H (*)
psi	**6**	**9**	**12**	**17**	**23**	**29**	**35**	**41**	**42**	**43**
bar	**0,4**	**0,6**	**0,8**	**1,2**	**1,6**	**2,0**	**2,4**	**2,8**	**2,9**	**3,0**
MAX. LOAD kg										
50 S		530	590	700	810	920	1030			
40 S		530	590	700	810	920	**1030**			
30 S		570	630	750	870	980	1100			
10 LT S	620	690	760	910	1060	1210	1360	1510	1550	1750
10 HT S		570	630	750	870	980	1100			

SIZE	Tread pattern	SW mm	OD mm	SLR mm	RC mm	SRI	Rim	Permitted Rims	Type	Tube
280/70R16 112A8 (112B)	**TM700**	282	798	355	2385	390	W9	W8 - W8L - W10	TUBELESS	10.00-16 TR15

PRESSURE										**H (*)**
psi	**6**	**9**	**12**	**17**	**23**	**29**	**35**	**41**	**42**	**43**
bar	**0,4**	**0,6**	**0,8**	**1,2**	**1,6**	**2,0**	**2,4**	**2,8**	**2,9**	**3,0**
MAX. LOAD kg										
50 S		580	640	760	880	1000	1120			
40 S		580	640	760	880	1000	**1120**			
30 S		620	680	810	940	1070	1200			
10 LT S	680	760	840	1000	1160	1320	1480	1640	1680	1900
10 HT S		620	680	810	940	1070	1200			

SIZE	Tread pattern	SW mm	OD mm	SLR mm	RC mm	SRI	Rim	Permitted Rims	Type	Tube
280/70R18 114A8 (114B)	**TM700**	282	849	380	2560	410	W9	W8 - W8L - W10	TUBELESS	10.5/80-18 TR218

PRESSURE										**H (*)**
psi	**6**	**9**	**12**	**17**	**23**	**29**	**35**	**41**	**42**	**43**
bar	**0,4**	**0,6**	**0,8**	**1,2**	**1,6**	**2,0**	**2,4**	**2,8**	**2,9**	**3,0**
MAX. LOAD kg										
50 S		600	660	790	920	1050	1180			
40 S		600	660	790	920	1050	**1180**			
30 S		640	710	850	980	1120	1260			
10 LT S	720	800	880	1050	1220	1390	1560	1730	1770	2010
10 HT S		640	710	850	980	1120	1260			

SIZE	Tread pattern	SW mm	OD mm	SLR mm	RC mm	SRI	Rim	Permitted Rims	Type	Tube
280/70R20 116A8 (116B)	**TM700**	279	910	410	2745	450	W9	W10	TUBELESS	9.5-20 TR218

PRESSURE										**H (*)**
psi	**6**	**9**	**12**	**17**	**23**	**29**	**35**	**41**	**42**	**43**
bar	**0,4**	**0,6**	**0,8**	**1,2**	**1,6**	**2,0**	**2,4**	**2,8**	**2,9**	**3,0**
MAX. LOAD kg										
50 S		590	675	875	1075	1175	1250			
40 S		590	675	875	1075	1175	**1250**			
30 S		630	725	940	1155	1260	1340			
10 LT S	765	855	945	1125	1305	1485	1660	1835	1875	2125
10 HT S		630	725	940	1155	1260	1340			

For technical notes about pressure tables please refer to page 244.

TM700 HIGH SPEED

The TM700 High Speed is the agriculture radial tire with high lugs yet suitable for speed up to 65 Km/hour. Intended for tractors equipped with integral or partial suspensions, it's a tire that stands out due to its excellent performance both on the road and in the field. In fact, though it reveals an emphasised road look, the TM700 High Speed delivers unmatched performance in terms of traction and low compaction in the field.

SIZE		
480/70R30	**147D**	**(144E)**
520/70R30	**151D**	**(148E)**

SIZE	Tread pattern	SW mm	OD mm	SLR mm	RC mm	SRI	Rim	Permitted Rims	Type	Tube
480/70R30 147D (144E)	**TM700 HS**	468	1474	667	4430	700	W15L	W14L - W16L - DW14L DW15L - DW16L	TUBELESS	18.4-30 TR218

PRESSURE									
psi	**6**	**9**	**12**	**17**	**23**	**26**	**29**	**32**	**35**
bar	**0,4**	**0,6**	**0,8**	**1,2**	**1,6**	**1,8**	**2,0**	**2,2**	**2,4**
MAX. LOAD kg									
70 S					2055	2240	2425	2615	2800
65 S					2255	2460	2665	2870	**3075**
50 S		1540	1700	2030	2360	2585	2800	3015	3230
40 S		1595	1765	2105	2435	2680	2900	3125	3350
30 S		1810	2000	2380	2760				
10 LT S	2050	2290	2540	3020	3500	3740			
10 HT S		1810	2000	2380	2760				

SIZE	Tread pattern	SW mm	OD mm	SLR mm	RC mm	SRI	Rim	Permitted Rims	Type	Tube
520/70R30 151D (148E)	**TM700 HS**	520	1535	680	4615	725	W16L	W15L - W18L - DW15L DW16L - DW18L	TUBELESS	18.4-30 TR218

PRESSURE								
psi	**9**	**12**	**14**	**17**	**20**	**23**	**29**	**35**
bar	**0,6**	**0,8**	**1,0**	**1,2**	**1,4**	**1,6**	**2,0**	**2,4**
MAX. LOAD kg								
70 S	1475	1695	1945	2200	2450	2725	2950	3150
65 S	1620	1865	2140	2415	2690	2900	3245	**3450**
50 S	1705	1955	2245	2535	2825	3150	3405	3650
40 S	1775	2040	2340	2645	2945	3250	3550	3750
30 S	1865	2140	2460	2775	3095	3450	3730	4000
10 LT S		2430	2795	3210	3625	4035	4500	
10 HT S	1865	2140	2460	2775	3095	3450		

For technical notes about pressure tables please refer to page 244.

TM600

Range of standard-series tubeless tires with metric marking. The main feature of the TM600 range is the innovative tread design. The number and shape of the lugs together with the rounded shoulder guarantee the maximum grassy and craps respects.

SIZE		
210/95R16		106A8 (106B) (7.50R16)
210/95R18		108A8 (108B) (7.50R18)
280/85R20		112A8 (109B) (11.2R20)
320/85R20		119A8 (116B) (12.4R20)
250/85R24		112A8 (109B)
280/85R24		115A8 (112B) (11.2R24)
320/85R24		122A8 (119B) (12.4R24)
340/85R24		125A8 (122B) (13.6R24)
380/85R24		131A8 (128B) (14.9R24)
420/85R24		137A8 (134B) (16.9R24)
280/85R28		118A8 (115B) (11.2R28)
320/85R28		124A8 (121B) (12.4R28)
340/85R28	•	127A8 (124B) (13.6R28)
380/85R28		133A8 (130B) (14.9R28)
420/85R28	•	139A8 (136B) (16.9R28)
380/85R30	*	135A8 (135B) (14.9R30)
380/85R30		135A8 (135B) (14.9R30)
420/85R30	•	140A8 (137B) (16.9R30)
420/90R30		147A8 (147B)
460/85R30		145A8 (142B) (18.4R30)
380/85R34		137A8 (137B) (14.9R34)
380/85R34		142A8 (142B) (14.9R34)
420/85R34		142A8 (139B) (16.9R34)
420/85R34		147A8 (147B)
460/85R34		147A8 (144B) (18.9R34)
320/85R38		129A8 (126B) (12.4R38)
340/85R38		133A8 (130B) (13.6R38)
380/80R38		142A8 (142B)
380/85R38		144A8 (144B) (14.9R38)
380/95R38	*	147A8 (147B)
400/75R38		138A8 (135B) (15.5R38)
420/85R38		144A8 (141B) (16.9R38)
420/85R38	*	149A8 (149B) (16.9R38)
460/85R38	•	149A8 (146B) (18.4R38)
480/80R38	*	149A8 (149B)
520/85R38	•	155A8 (152B) (20.8R38)
520/85R38	*	155A8 (152B) (20.8R38)
480/80R42	•	151A8 (151B) (18.4R42)
520/85R42	•	157A8 (157B) (20.8R42)
480/80R46		158A8 (158B) (18.4R46)
520/85R46		158A8 (158B) (20.8R46)
480/80R50		159D
480/95R50	*	164A8 (164B)

* = ProgressiveTraction® Version
• = Available also in Heavy Duty version

TM600 Rice

The new 480/80R50 TM600 Rice is the ideal solution for application in paddy and muddy soils. The increased height of the tread compared to the R-1W version of the same size makes this tire extremely versatile in both very wet soil conditions and in light road applications.

SIZE		
NEW	480/80R50	159A8 (159B) Rice

SIZE	Tread pattern	SW mm	OD mm	SLR mm	RC mm	SRI	Rim	Permitted Rims	Type	Tube
210/95R16 106A8 (106B) (7.50R16)	**TM600**	210	800	363	2415	390	W7	W6 - 5.50F	TUBELESS	

PRESSURE									H (*)
psi	**14**	**17**	**20**	**23**	**29**	**35**	**41**	**42**	**43**
bar	**1,0**	**1,2**	**1,4**	**1,6**	**2,0**	**2,4**	**2,8**	**2,9**	**3,0**
MAX. LOAD kg									
50 S	590	665	745	820	895	950			
40 S	590	665	745	820	895	**950**			
30 S	635	715	800	880	960	1020			
10 LT S	805	905	1015	1120	1220	1295	1400	1425	1450
10 HT S	635	715	800	880	960	1020			

SIZE	Tread pattern	SW mm	OD mm	SLR mm	RC mm	SRI	Rim	Permitted Rims	Type	Tube
210/95R18 108A8 (108B) (7.50R18)	**TM600**	210	855	391	2555	410	W7	W6 - 5.50F	TUBELESS	

PRESSURE									H (*)
psi	**14**	**17**	**20**	**23**	**29**	**35**	**41**	**42**	**43**
bar	**1,0**	**1,2**	**1,4**	**1,6**	**2,0**	**2,4**	**2,8**	**2,9**	**3,0**
MAX. LOAD kg									
50 S	620	700	780	860	940	1000			
40 S	620	700	780	860	940	**1000**			
30 S	665	750	835	925	1010	1070			
10 LT S	845	955	1065	1170	1280	1360	1470	1500	1525
10 HT S	665	750	835	925	1010	1070			

SIZE	Tread pattern	SW mm	OD mm	SLR mm	RC mm	SRI	Rim	Permitted Rims	Type	Tube
280/85R20 112A8 (109B) (11.2R20)	**TM600**	295	985	450	2955	475	W10	W9 - W8 - DW10	TUBELESS	11.2-20 TR218

PRESSURE										H (*)
psi	**6**	**9**	**12**	**14**	**17**	**20**	**23**	**26**	**28**	**30**
bar	**0,4**	**0,6**	**0,8**	**1,0**	**1,2**	**1,4**	**1,6**	**1,8**	**1,9**	**2,1**
MAX. LOAD kg										
50 S		680	750	815	885	955	1030			
40 S		745	820	895	970	1045	**1120**			
30 S		800	880	960	1040	1120	1200			
10 LT S	895	1000	1105	1210	1315	1420	1525	1630	1680	1905
10 HT S		800	880	960	1040	1120	1200			

SIZE	Tread pattern	SW mm	OD mm	SLR mm	RC mm	SRI	Rim	Permitted Rims	Type	Tube
320/85R20 119A8 (116B) (12.4R20)	**TM600**	329	1052	470	3160	500	W11	W10 - W9 - DW11	TUBELESS	11.2-20 TR218

PRESSURE										H (*)
psi	**6**	**9**	**12**	**14**	**17**	**20**	**23**	**26**	**28**	**30**
bar	**0,4**	**0,6**	**0,8**	**1,0**	**1,2**	**1,4**	**1,6**	**1,8**	**1,9**	**2,1**
MAX. LOAD kg										
50 S		825	910	995	1075	1160	1250			
40 S		905	1000	1090	1180	1270	**1360**			
30 S		970	1070	1170	1265	1360	1460			
10 LT S	1105	1230	1355	1480	1605	1730	1855	1980	2040	2315
10 HT S		970	1070	1170	1265	1360	1460			

SIZE	Tread pattern	SW mm	OD mm	SLR mm	RC mm	SRI	Rim	Permitted Rims	Type	Tube
250/85R24 112A8 (109B)	**TM600**	245	1035	465	3115	500	W8	W7 - W9	Tubeless	9.5R24 TR218

PRESSURE									H (*)
psi	**9**	**12**	**14**	**17**	**20**	**23**	**29**	**32**	**35**	**38**
bar	**0,6**	**0,8**	**1,0**	**1,2**	**1,4**	**1,6**	**2,0**	**2,2**	**2,4**	**2,6**
MAX. LOAD kg										
50 S	510	585	675	760	845	935	1030			
40 S	560	645	740	835	930	1025	**1120**			
30 S	600	690	790	895	995	1100	1200			
10 LT S	760	870	1000	1125	1255	1385	1515	1605	1680	1905
10 HT S	600	690	790	895	995	1100	1200			

SIZE	Tread pattern	SW mm	OD mm	SLR mm	RC mm	SRI	Rim	Permitted Rims	Type	Tube
280/85R24 115A8 (112B) (11.2R24)	**TM600**	292	1086	494	3276	525	W10	W9 - W8 - DW10	TUBELESS	11.2-24 TR218

PRESSURE										**H (*)**
psi	**6**	**9**	**12**	**14**	**17**	**20**	**23**	**26**	**28**	**30**
bar	**0,4**	**0,6**	**0,8**	**1,0**	**1,2**	**1,4**	**1,6**	**1,8**	**1,9**	**2,1**
MAX. LOAD kg										
50 S		740	815	890	965	1035	1120			
40 S		810	895	975	1055	1135	**1215**			
30 S		870	960	1045	1130	1215	1305			
10 LT S	980	1095	1210	1325	1440	1550	1660	1770	1825	2070
10 HT S		870	960	1045	1130	1215	1305			

SIZE	Tread pattern	SW mm	OD mm	SLR mm	RC mm	SRI	Rim	Permitted Rims	Type	Tube
320/85R24 122A8 (119B) (12.4R24)	**TM600**	329	1154	515	3465	550	W11	W10 - W9 - DW10 DW11	TUBELESS	12.4-24 13.6-24 TR218

PRESSURE										**H (*)**
psi	**6**	**9**	**12**	**14**	**17**	**20**	**23**	**26**	**28**	**30**
bar	**0,4**	**0,6**	**0,8**	**1,0**	**1,2**	**1,4**	**1,6**	**1,8**	**1,9**	**2,1**
MAX. LOAD kg										
50 S		910	1005	1095	1185	1275	1360			
40 S		1000	1100	1200	1300	1400	**1500**			
30 S		1070	1180	1285	1395	1500	1605			
10 LT S	1200	1340	1480	1620	1760	1900	2040	2180	2250	2550
10 HT S		1070	1180	1285	1395	1500	1605			

SIZE	Tread pattern	SW mm	OD mm	SLR mm	RC mm	SRI	Rim	Permitted Rims	Type	Tube
340/85R24 125A8 (122B) (13.6R24)	**TM600**	353	1188	540	3547	575	W12	W11 - DW11 - DW12	TUBELESS	13.6-24 14.9-24 TR218

PRESSURE										H (*)
psi	**6**	**9**	**12**	**14**	**17**	**20**	**23**	**26**	**28**	**30**
bar	**0,4**	**0,6**	**0,8**	**1,0**	**1,2**	**1,4**	**1,6**	**1,8**	**1,9**	**2,1**
MAX. LOAD kg										
50 S		1000	1105	1205	1305	1405	1500			
40 S		1095	1210	1320	1430	1540	**1650**			
30 S		1175	1295	1415	1535	1650	1770			
10 LT S	1320	1475	1630	1785	1940	2095	2250	2400	2475	2805
10 HT S		1175	1295	1415	1535	1650	1770			

SIZE	Tread pattern	SW mm	OD mm	SLR mm	RC mm	SRI	Rim	Permitted Rims	Type	Tube
380/85R24 131A8 (128B) (14.9R24)	**TM600**	390	1256	560	3750	600	W13	W12 - W11 - DW11 DW12 - DW13	TUBELESS	14.9-24 16.9-24 TR218

PRESSURE										H (*)
psi	**6**	**9**	**12**	**14**	**17**	**20**	**23**	**26**	**28**	**30**
bar	**0,4**	**0,6**	**0,8**	**1,0**	**1,2**	**1,4**	**1,6**	**1,8**	**1,9**	**2,1**
MAX. LOAD kg										
50 S		1170	1295	1420	1540	1660	1800			
40 S		1285	1420	1555	1690	1820	**1950**			
30 S		1375	1520	1665	1810	1950	2090			
10 LT S	1575	1755	1935	2115	2295	2475	2655	2835	2925	3315
10 HT S		1375	1520	1665	1810	1950	2090			

SIZE	Tread pattern	SW mm	OD mm	SLR mm	RC mm	SRI	Rim	Permitted Rims	Type	Tube
420/85R24 137A8 (134B) (16.9R24)	**TM600**	438	1324	590	3970	625	W15L	W14L - DW14L DW15L	TUBELESS	16.9-24 TR218

PRESSURE										**H (*)**
psi	**6**	**9**	**12**	**14**	**17**	**20**	**23**	**26**	**28**	**30**
bar	**0,4**	**0,6**	**0,8**	**1,0**	**1,2**	**1,4**	**1,6**	**1,8**	**1,9**	**2,1**
MAX. LOAD kg										
50 S		1385	1530	1670	1815	1955	2120			
40 S		1520	1680	1835	1990	2145	**2300**			
30 S		1630	1800	1965	2130	2300	2465			
10 LT S	1840	2055	2270	2485	2700	2915	3130	3345	3450	3910
10 HT S		1630	1800	1965	2130	2300	2465			

SIZE	Tread pattern	SW mm	OD mm	SLR mm	RC mm	SRI	Rim	Permitted Rims	Type	Tube
280/85R28 118A8 (115B) (11.2R28)	**TM600**	292	1187	542	3580	575	W10	W9 - DW10	TUBELESS	11.2-28 12.4-28 TR218

PRESSURE										**H (*)**
psi	**6**	**9**	**12**	**14**	**17**	**20**	**23**	**26**	**28**	**30**
bar	**0,4**	**0,6**	**0,8**	**1,0**	**1,2**	**1,4**	**1,6**	**1,8**	**1,9**	**2,1**
MAX. LOAD kg										
50 S		795	875	960	1040	1120	1215			
40 S		870	960	1050	1140	1230	**1320**			
30 S		935	1030	1125	1220	1320	1415			
10 LT S	1065	1190	1315	1440	1560	1680	1800	1920	1980	2245
10 HT S		935	1030	1125	1220	1320	1415			

SIZE	Tread pattern	SW mm	OD mm	SLR mm	RC mm	SRI	Rim	Permitted Rims	Type	Tube
320/85R28 124A8 (121B) (12.4R28)	**TM600**	329	1255	566	3796	600	W11	W10 - W9 - DW10 DW11	TUBELESS	12.4-28 TR218

PRESSURE										H (*)
psi	**6**	**9**	**12**	**14**	**17**	**20**	**23**	**26**	**28**	**30**
bar	**0,4**	**0,6**	**0,8**	**1,0**	**1,2**	**1,4**	**1,6**	**1,8**	**1,9**	**2,1**
MAX. LOAD kg										
50 S		960	1060	1160	1260	1360	1450			
40 S		1050	1160	1270	1380	1490	**1600**			
30 S		1125	1245	1360	1480	1595	1715			
10 LT S	1275	1425	1575	1725	1875	2025	2175	2325	2400	2720
10 HT S		1125	1245	1360	1480	1595	1715			

SIZE	Tread pattern	SW mm	OD mm	SLR mm	RC mm	SRI	Rim	Permitted Rims	Type	Tube
340/85R28 127A8 (124B) (13.6R28)	**TM600**	353	1289	595	3885	625	W12	W11 - DW11 - DW12	TUBELESS	13.6-28 12.4-28 TR218

PRESSURE										H (*)
psi	**6**	**9**	**12**	**14**	**17**	**20**	**23**	**26**	**28**	**30**
bar	**0,4**	**0,6**	**0,8**	**1,0**	**1,2**	**1,4**	**1,6**	**1,8**	**1,9**	**2,1**
MAX. LOAD kg										
50 S		1050	1160	1265	1375	1485	1600			
40 S		1150	1270	1390	1510	1630	**1750**			
30 S		1235	1360	1490	1620	1745	1875			
10 LT S	1405	1570	1735	1900	2065	2225	2385	2545	2625	2975
10 HT S		1235	1360	1490	1620	1745	1875			

* Available also in Heavy Duty version

SIZE	Tread pattern	SW mm	OD mm	SLR mm	RC mm	SRI	Rim	Permitted Rims	Type	Tube
380/85R28 133A8 (130B) (14.9R28)	**TM600**	390	1357	615	4085	650	W13	W12 - W11 - DW11 DW12 - DW13	TUBELESS	14.9-28 16.9-28 TR218

PRESSURE										H (*)
psi	**6**	**9**	**12**	**14**	**17**	**20**	**23**	**26**	**28**	**30**
bar	**0,4**	**0,6**	**0,8**	**1,0**	**1,2**	**1,4**	**1,6**	**1,8**	**1,9**	**2,1**
MAX. LOAD kg										
50 S		1240	1365	1495	1620	1750	1900			
40 S		1360	1500	1640	1780	1920	**2060**			
30 S		1460	1605	1755	1905	2055	2205			
10 LT S	1660	1855	2045	2235	2425	2615	2805	2995	3090	3505
10 HT S		1460	1605	1755	1905	2055	2205			

SIZE	Tread pattern	SW mm	OD mm	SLR mm	RC mm	SRI	Rim	Permitted Rims	Type	Tube
420/85R28 139A8 (136B) (16.9R28)	**TM600**	438	1425	635	4290	675	W15L	W14L - DW14L DW15L	TUBELESS	16.9-28 TR218

PRESSURE										**H (*)**
psi	**6**	**9**	**12**	**14**	**17**	**20**	**23**	**26**	**28**	**30**
bar	**0,4**	**0,6**	**0,8**	**1,0**	**1,2**	**1,4**	**1,6**	**1,8**	**1,9**	**2,1**
MAX. LOAD kg										
50 S		1465	1615	1765	1915	2065	2240			
40 S		1605	1770	1935	2100	2265	**2430**			
30 S		1720	1895	2075	2250	2425	2605			
10 LT S	1955	2185	2410	2635	2860	3085	3310	3535	3645	4135
10 HT S		1720	1895	2075	2250	2425	2605			

* Available also in Heavy Duty version

SIZE	Tread pattern	SW mm	OD mm	SLR mm	RC mm	SRI	Rim	Permitted Rims	Type	Tube
380/85R30 135A8 (135B) (14.9R30)	**TM600**	390	1408	635	4238	675	W13	W12- W11 - DW11 DW12 - DW13	TUBELESS	14.9-30 TR218

With ProgressiveTraction® profile

PRESSURE										**H (*)**
psi	**6**	**9**	**12**	**14**	**17**	**20**	**23**	**26**	**28**	**30**
bar	**0,4**	**0,6**	**0,8**	**1,0**	**1,2**	**1,4**	**1,6**	**1,8**	**1,9**	**2,1**
MAX. LOAD kg										
50 S		1430	1580	1730	1880	2030	2180			
40 S		1430	1580	1730	1880	2030	**2180**			
30 S		1535	1695	1855	2015	2175	2335			
10 LT S	1745	1950	2155	2360	2565	2770	2970	3170	3270	3710
10 HT S		1535	1695	1855	2015	2175	2335			

SIZE	Tread pattern	SW mm	OD mm	SLR mm	RC mm	SRI	Rim	Permitted Rims	Type	Tube
380/85R30 135A8 (135B) (14.9R30)	**TM600**	390	1408	635	4238	675	W13	W12- W11 - DW11 DW12 - DW13	TUBELESS	14.9-30 TR218

PRESSURE										**H (*)**
psi	**6**	**9**	**12**	**14**	**17**	**20**	**23**	**26**	**28**	**30**
bar	**0,4**	**0,6**	**0,8**	**1,0**	**1,2**	**1,4**	**1,6**	**1,8**	**1,9**	**2,1**
MAX. LOAD kg										
50 S		1430	1580	1730	1880	2030	2180			
40 S		1430	1580	1730	1880	2030	**2180**			
30 S		1535	1695	1855	2015	2175	2335			
10 LT S	1745	1950	2155	2360	2565	2770	2970	3170	3270	3710
10 HT S		1535	1695	1855	2015	2175	2335			

SIZE	Tread pattern	SW mm	OD mm	SLR mm	RC mm	SRI	Rim	Permitted Rims	Type	Tube
420/85R30 140A8 (137B) (16.9R30)	**TM600**	438	1475	660	4455	700	W15L	W14L - DW14L DW15L	TUBELESS	16.9-30 18.4-30 TR218

PRESSURE										**H (*)**
psi	**6**	**9**	**12**	**14**	**17**	**20**	**23**	**26**	**28**	**30**
bar	**0,4**	**0,6**	**0,8**	**1,0**	**1,2**	**1,4**	**1,6**	**1,8**	**1,9**	**2,1**
MAX. LOAD kg										
50 S		1505	1660	1815	1970	2125	2300			
40 S		1650	1820	1990	2160	2330	**2500**			
30 S		1770	1950	2130	2315	2495	2675			
10 LT S	2000	2235	2470	2705	2940	3175	3405	3635	3750	4250
10 HT S		1770	1950	2130	2315	2495	2675			

* Available also in Heavy Duty version

SIZE	Tread pattern	SW mm	OD mm	SLR mm	RC mm	SRI	Rim	Permitted Rims	Type	Tube
420/90R30 147A8 (147B)	**TM600**	435	1518	691	4580	700	DW13	W13 - W14L DW14L	TUBELESS	18.4-30 TR218

PRESSURE										**H (*)**
psi	**9**	**12**	**14**	**17**	**20**	**23**	**29**	**35**	**41**	**42**	**43**
bar	**0,6**	**0,8**	**1,0**	**1,2**	**1,4**	**1,6**	**2,0**	**2,4**	**2,8**	**2,9**	**3,0**
MAX. LOAD kg											
50 S	1450	1665	1910	2155	2400	2645	2860	3075			
40 S	1450	1665	1910	2155	2400	2645	2860	**3075**			
30 S	1550	1780	2040	2305	2570	2830	3060	3295			
10 LT S	1950	2240	2570	2900	3235	3565	3855	4145	4520	4615	5230
10 HT S	1550	1780	2040	2305	2570	2830	3060	3295			

SIZE	Tread pattern	SW mm	OD mm	SLR mm	RC mm	SRI	Rim	Permitted Rims	Type	Tube
460/85R30 145A8 (142B) (18.4R30)	**TM600**	475	1544	691	4678	725	W16L	W15L - DW15L DW16L	TUBELESS	18.4-30 TR218

PRESSURE										**H (*)**
psi	**6**	**9**	**12**	**14**	**17**	**20**	**23**	**26**	**28**	**30**
bar	**0,4**	**0,6**	**0,8**	**1,0**	**1,2**	**1,4**	**1,6**	**1,8**	**1,9**	**2,1**
MAX. LOAD kg										
50 S		1730	1915	2095	2275	2460	2650			
40 S		1900	2100	2300	2500	2700	**2900**			
30 S		2035	2250	2465	2675	2890	3105			
10 LT S	2325	2595	2865	3135	3405	3675	3945	4215	4350	4930
10 HT S		2035	2250	2465	2675	2890	3105			

SIZE	Tread pattern	SW mm	OD mm	SLR mm	RC mm	SRI	Rim	Permitted Rims	Type	Tube
380/85R34 137A8 (137B) (14.9R34)	**TM600**	390	1513	683	4574	725	W12	W13	TUBELESS	16.9-34 TR218

PRESSURE										H (*)
psi	**6**	**9**	**12**	**14**	**17**	**20**	**23**	**26**	**28**	**30**
bar	**0,4**	**0,6**	**0,8**	**1,0**	**1,2**	**1,4**	**1,6**	**1,8**	**1,9**	**2,1**
MAX. LOAD kg										
50 S		1515	1670	1830	1990	2145	2300			
40 S		1515	1670	1830	1990	2145	**2300**			
30 S		1620	1790	1960	2130	2295	2465			
10 LT S	1850	2060	2275	2490	2705	2920	3130	3345	3450	3910
10 HT S		1620	1790	1960	2130	2295	2465			

SIZE	Tread pattern	SW mm	OD mm	SLR mm	RC mm	SRI	Rim	Permitted Rims	Type	Tube
380/85R34 142A8 (142B) (14.9R34)	**TM600**	390	1515	693	4565	725	W12	W13	TUBELESS	

PRESSURE										H (*)
psi	**9**	**12**	**14**	**17**	**20**	**23**	**29**	**35**	**41**	**42**	**43**
bar	**0,6**	**0,8**	**1,0**	**1,2**	**1,4**	**1,6**	**2,0**	**2,4**	**2,8**	**2,9**	**3,0**
MAX. LOAD kg											
50 S	1250	1435	1645	1855	2070	2280	2495	2650			
40 S	1250	1435	1645	1855	2070	2280	2495	**2650**			
30 S	1340	1540	1765	1985	2215	2440	2670	2840			
10 LT S	1690	1940	2225	2505	2795	3080	3370	3580	3900	4025	4510
10 HT S	1340	1540	1765	1985	2215	2440	2670	2840			

SIZE	Tread pattern	SW mm	OD mm	SLR mm	RC mm	SRI	Rim	Permitted Rims	Type	Tube
420/85R34 142A8 (139B) (16.9R34)	**TM600**	438	1578	715	4745	750	W15L	W14L - DW14L DW15L	TUBELESS	16.9-34 TR218

PRESSURE										H (*)
psi	**6**	**9**	**12**	**14**	**17**	**20**	**23**	**26**	**28**	**30**
bar	**0,4**	**0,6**	**0,8**	**1,0**	**1,2**	**1,4**	**1,6**	**1,8**	**1,9**	**2,1**
MAX. LOAD kg										
50 S		1595	1760	1925	2085	2250	2430			
40 S		1750	1930	2110	2290	2470	**2650**			
30 S		1875	2070	2260	2455	2645	2840			
10 LT S	2125	2375	2625	2875	3120	3365	3610	3855	3975	4505
10 HT S		1875	2070	2260	2455	2645	2840			

SIZE	Tread pattern	SW mm	OD mm	SLR mm	RC mm	SRI	Rim	Permitted Rims	Type	Tube
420/85R34 147A8 (147B) 16.9R34	**TM600**	445	1575	725	4735	750	W15L	W14L - DW14L DW15L	TUBELESS	16.9-34 TR218

PRESSURE										**H (*)**
psi	**9**	**12**	**14**	**17**	**20**	**23**	**29**	**35**	**41**	**42**	**43**
bar	**0,6**	**0,8**	**1,0**	**1,2**	**1,4**	**1,6**	**2,0**	**2,4**	**2,8**	**2,9**	**3,0**
MAX. LOAD kg											
50 S	1325	1665	1910	2155	2400	2645	2860	3075			
40 S	1325	1665	1910	2155	2400	2645	2860	**3075**			
30 S	1415	1780	2040	2305	2570	2830	3060	3295			
10 LT S	1800	2260	2595	2930	3265	3600	3890	4185	4525	4615	5230
10 HT S	1415	1780	2040	2305	2570	2830	3060	3295			

SIZE	Tread pattern	SW mm	OD mm	SLR mm	RC mm	SRI	Rim	Permitted Rims	Type	Tube
460/85R34 147A8 (144B) 18.4R34	**TM600**	475	1646	745	4945	775	W16L	W15L - DW15L - DW16L	TUBELESS	18.4-34 16.9-34 TR218

PRESSURE										**H (*)**
psi	**6**	**9**	**12**	**14**	**17**	**20**	**23**	**26**	**28**	**30**
bar	**0,4**	**0,6**	**0,8**	**1,0**	**1,2**	**1,4**	**1,6**	**1,8**	**1,9**	**2,1**
MAX. LOAD kg										
50 S		1845	2035	2225	2420	2610	2800			
40 S		2025	2235	2445	2655	2865	**3075**			
30 S		2170	2395	2620	2845	3070	3295			
10 LT S	2465	2755	3045	3335	3620	3905	4190	4475	4615	5230
10 HT S		2170	2395	2620	2845	3070	3295			

SIZE	Tread pattern	SW mm	OD mm	SLR mm	RC mm	SRI	Rim	Permitted Rims	Type	Tube
320/85R38 129A8 (126B) (12.4R38)	**TM600**	325	1520	690	4605	725	W11	W10 - W9 - DW10 DW11	TUBELESS	12.4-38 16.9-38 TR218

PRESSURE										**H (*)**
psi	**6**	**9**	**12**	**14**	**17**	**20**	**23**	**26**	**28**	**30**
bar	**0,4**	**0,6**	**0,8**	**1,0**	**1,2**	**1,4**	**1,6**	**1,8**	**1,9**	**2,1**
MAX. LOAD kg										
50 S		1105	1220	1340	1455	1570	1700			
40 S		1215	1340	1470	1595	1725	**1850**			
30 S		1300	1435	1570	1710	1845	1980			
10 LT S	1660	1650	1825	1995	2170	2345	2515	2690	2775	3145
10 HT S		1300	1435	1570	1710	1845	1980			

SIZE	Tread pattern	SW mm	OD mm	SLR mm	RC mm	SRI	Rim	Permitted Rims	Type	Tube
340/85R38 133A8 (130B) (13.6R38)	**TM600**	353	1543	710	4665	750	W12	W11 - DW11 DW12	TUBELESS	13.6-38 16.9-38 TR218

PRESSURE										H (*)
psi	**6**	**9**	**12**	**14**	**17**	**20**	**23**	**26**	**28**	**30**
bar	**0,4**	**0,6**	**0,8**	**1,0**	**1,2**	**1,4**	**1,6**	**1,8**	**1,9**	**2,1**
MAX. LOAD kg										
50 S		1240	1365	1495	1620	1750	1900			
40 S		1360	1500	1640	1780	1920	**2060**			
30 S		1460	1605	1755	1905	2055	2205			
10 LT S	1660	1855	2045	2235	2425	2615	2805	2995	3090	3505
10 HT S		1460	1605	1755	1905	2055	2205			

SIZE	Tread pattern	SW mm	OD mm	SLR mm	RC mm	SRI	Rim	Permitted Rims	Type	Tube
380/80R38 142A8 (142B)	**TM600**	375	1575	724	4765	750	W12	W11 - W13 - DW11 DW12 - DW13	TUBELESS	14.9-38 16.9-38 TR218

PRESSURE										H (*)
psi	**9**	**12**	**14**	**17**	**20**	**23**	**29**	**35**	**41**	**42**	**43**
bar	**0,6**	**0,8**	**1,0**	**1,2**	**1,4**	**1,6**	**2,0**	**2,4**	**2,8**	**2,9**	**3,0**
MAX. LOAD kg											
50 S	1250	1435	1645	1855	2070	2280	2465	2650			
40 S	1250	1435	1645	1855	2070	2280	2465	**2650**			
30 S	1335	1535	1760	1985	2215	2440	2640	2840			
10 LT S	1680	1930	2215	2500	2785	3070	3320	3570	3895	3975	4505
10 HT S	1335	1535	1760	1985	2215	2440	2640	2840			

SIZE	Tread pattern	SW mm	OD mm	SLR mm	RC mm	SRI	Rim	Permitted Rims	Type	Tube
380/85R38 144A8 (144B) (14.9R38)	**TM600**	400	1610	730	4900	775	W13	W11 - W12 DW11-DW12-DW13	TUBELESS	16.9-38 TR218

PRESSURE										H (*)
psi	**9**	**12**	**14**	**17**	**20**	**23**	**29**	**35**	**41**	**42**	**43**
bar	**0,6**	**0,8**	**1,0**	**1,2**	**1,4**	**1,6**	**2,0**	**2,4**	**2,8**	**2,9**	**3,0**
MAX. LOAD kg											
50 S	1320	1515	1740	1960	2185	2410	2605	2800			
40 S	1320	1515	1740	1960	2185	2410	2605	**2800**			
30 S	1410	1620	1860	2100	2340	2580	2790	3000			
10 LT S	1775	2040	2340	2645	2945	3245	3510	3775	4115	4200	4760
10 HT S	1410	1620	1860	2100	2340	2580	2790	3000			

SIZE	Tread pattern	SW mm	OD mm	SLR mm	RC mm	SRI	Rim	Permitted Rims	Type	Tube
380/95R38 147A8 (147B)	**TM600**	390	1674	762	5020	800	W12	W13	TUBELESS	

With ProgressiveTraction® profile

PRESSURE											H (*)
psi	**9**	**12**	**14**	**17**	**20**	**23**	**29**	**35**	**41**	**42**	**43**
bar	**0,6**	**0,8**	**1,0**	**1,2**	**1,4**	**1,6**	**2,0**	**2,4**	**2,8**	**2,9**	**3,0**
MAX. LOAD kg											
50 S	1450	1665	1910	2155	2400	2645	2895	3075			
40 S	1450	1665	1910	2155	2400	2645	2895	**3075**			
30 S	1555	1785	2045	2310	2570	2835	3100	3295			
10 LT S	1960	2250	2580	2910	3240	3575	3910	4155	4525	4675	5235
10 HT S	1555	1785	2045	2310	2570	2835	3100	3295			

SIZE	Tread pattern	SW mm	OD mm	SLR mm	RC mm	SRI	Rim	Permitted Rims	Type	Tube
400/75R38 138A8 (135B) (15.5R38)	**TM600**	395	1565	707	4670	750	DW14L	W14L	TUBELESS	

PRESSURE										H (*)
psi	**6**	**9**	**12**	**14**	**17**	**20**	**23**	**26**	**28**	**30**
bar	**0,4**	**0,6**	**0,8**	**1,0**	**1,2**	**1,4**	**1,6**	**1,8**	**1,9**	**2,1**
MAX. LOAD kg										
50 S		1435	1585	1735	1885	2035	2180			
40 S		1555	1715	1880	2040	2200	**2360**			
30 S		1660	1835	2010	2185	2355	2530			
10 LT S	1895	2110	2335	2555	2775	2995	3210	3430	3540	4015
10 HT S		1660	1835	2010	2185	2355	2530			

SIZE	Tread pattern	SW mm	OD mm	SLR mm	RC mm	SRI	Rim	Permitted Rims	Type	Tube
420/85R38 144A8 (141B) (16.9R38)	**TM600**	438	1679	760	5060	800	W15L	W14L - DW14L DW15L	TUBELESS	16.9-38 TR218

PRESSURE										H (*)
psi	**6**	**9**	**12**	**14**	**17**	**20**	**23**	**26**	**28**	**30**
bar	**0,4**	**0,6**	**0,8**	**1,0**	**1,2**	**1,4**	**1,6**	**1,8**	**1,9**	**2,1**
MAX. LOAD kg										
50 S		1685	1860	2030	2205	2380	2575			
40 S		1850	2040	2230	2420	2610	**2800**			
30 S		1980	2185	2390	2590	2795	3000			
10 LT S	2250	2510	2770	3030	3290	3550	3810	4070	4200	4760
10 HT S		1980	2185	2390	2590	2795	3000			

SIZE	Tread pattern	SW mm	OD mm	SLR mm	RC mm	SRI	Rim	Permitted Rims	Type	Tube
420/85R38 149A8 (149B) (16.9R38)	**TM600**	440	1665	766	5000	800	W14L	DW14L - W15L DW15L	TUBELESS	

With ProgressiveTraction® profile

PRESSURE										H (*)
psi	**9**	**12**	**14**	**17**	**20**	**23**	**29**	**35**	**41**	**42**	**43**
bar	**0,6**	**0,8**	**1,0**	**1,2**	**1,4**	**1,6**	**2,0**	**2,4**	**2,8**	**2,9**	**3,0**
MAX. LOAD kg											
50 S	1530	1755	2015	2275	2535	2795	3055	3250			
40 S	1530	1755	2015	2275	2535	2795	3055	**3250**			
30 S	1640	1880	2160	2435	2715	2995	3270	3480			
10 LT S	2070	2370	2725	3075	3425	3775	4125	4390	4785	4940	5530
10 HT S	1640	1880	2160	2435	2715	2995	3270	3480			

SIZE	Tread pattern	SW mm	OD mm	SLR mm	RC mm	SRI	Rim	Permitted Rims	Type	Tube
460/85R38 149A8 (146B) (18.4R38)	**TM600**	475	1747	800	5260	825	W16L	W15L - DW15L DW16L	TUBELESS	18.4-38 TR218

PRESSURE									H (*)
psi	**6**	**9**	**12**	**14**	**17**	**20**	**23**	**26**	**28**	**30**
bar	**0,4**	**0,6**	**0,8**	**1,0**	**1,2**	**1,4**	**1,6**	**1,8**	**1,9**	**2,1**
MAX. LOAD kg										
50 S		1950	2155	2360	2560	2760	3000			
40 S		2140	2365	2590	2810	3030	**3250**			
30 S		2290	2535	2775	3010	3245	3480			
10 LT S	2595	2900	3205	3510	3815	4120	4425	4725	4875	5525
10 HT S		2290	2535	2775	3010	3245	3480			

* Available also in Heavy Duty version

SIZE	Tread pattern	SW mm	OD mm	SLR mm	RC mm	SRI	Rim	Permitted Rims	Type	Tube
480/80R38 149A8 (149B)	**TM600**	495	1760	786	5235	825	W16A	W15 - DW15 DW16	TUBELESS	

With ProgressiveTraction® profile

PRESSURE									H (*)
psi	**6**	**9**	**12**	**14**	**17**	**20**	**23**	**26**	**28**	**30**
bar	**0,4**	**0,6**	**0,8**	**1**	**1,2**	**1,4**	**1,6**	**1,8**	**1,9**	**2,1**
MAX. LOAD kg										
50 S		2140	2365	2590	2810	3030	3250			
40 S		2140	2365	2590	2810	3030	**3250**			
30 S		2290	2535	2775	3010	3245	3480			
10 LT S	2595	2900	3205	3510	3815	4120	4425	4725	4875	5525
10 HT S		2290	2535	2775	3010	3245	3480			

SIZE	Tread pattern	SW mm	OD mm	SLR mm	RC mm	SRI	Rim	Permitted Rims	Type	Tube
520/85R38 155A8 (152B) (20.8R38)	**TM600**	536	1849	825	5510	875	DW18L	W16L - W18L DW16L	TUBELESS	20.8-38 TR218

PRESSURE										**H (*)**
psi	**6**	**9**	**12**	**14**	**17**	**20**	**23**	**26**	**28**	**30**
bar	**0,4**	**0,6**	**0,8**	**1,0**	**1,2**	**1,4**	**1,6**	**1,8**	**1,9**	**2,1**
MAX. LOAD kg										
50 S		2325	2565	2805	3045	3290	3550			
40 S		2550	2815	3080	3345	3610	**3875**			
30 S		2730	3015	3300	3580	3865	4150			
10 LT S	3105	3470	3835	4195	4555	4915	5275	5635	5815	6590
10 HT S		2730	3015	3300	3580	3865	4150			

* Available also in Heavy Duty version

SIZE	Tread pattern	SW mm	OD mm	SLR mm	RC mm	SRI	Rim	Permitted Rims	Type	Tube
520/85R38 155A8 (152B)	**TM600**	562	1849	820	5550	875	DW18L	W16L - W18L - DW16L	TUBELESS	20.8-38 TR218
With ProgressiveTraction® profile										

PRESSURE										**H (*)**
psi	**6**	**9**	**12**	**14**	**17**	**20**	**23**	**26**	**28**	**30**
bar	**0,4**	**0,6**	**0,8**	**1,0**	**1,2**	**1,4**	**1,6**	**1,8**	**1,9**	**2,1**
MAX. LOAD kg										
50 S		2325	2565	2805	3045	3290	3550			
40 S		2550	2815	3080	3345	3610	**3875**			
30 S		2730	3015	3300	3580	3865	4150			
10 LT S	3105	3470	3835	4195	4555	4915	5275	5635	5815	6590
10 HT S		2730	3015	3300	3580	3865	4150			

SIZE	Tread pattern	SW mm	OD mm	SLR mm	RC mm	SRI	Rim	Permitted Rims	Type	Tube
480/80R42 151A8 (151B) (18.4R42)	**TM600**	495	1850	833	5550	875	W16A	DD16 - DW16B DW16L	TUBELESS	18.4-42 20.8-42 TR218

PRESSURE										**H (*)**
psi	**6**	**9**	**12**	**14**	**17**	**20**	**23**	**26**	**28**	**30**
bar	**0,4**	**0,6**	**0,8**	**1,0**	**1,2**	**1,4**	**1,6**	**1,8**	**1,9**	**2,1**
MAX. LOAD kg										
50 S		2270	2505	2745	2985	3220	3450			
40 S		2270	2505	2745	2985	3220	**3450**			
30 S		2430	2685	2940	3195	3445	3695			
10 LT S	2770	3085	3410	3735	4060	4375	4695	5015	5175	5865
10 HT S		2430	2685	2940	3195	3445	3695			

* Available also in Heavy Duty version

SIZE	Tread pattern	SW mm	OD mm	SLR mm	RC mm	SRI	Rim	Permitted Rims	Type	Tube
520/85R42 157A8 (157B) (20.8R42)	**TM600**	536	1952	881	5867	925	DW18L	W16L - W18L DW16L	TUBELESS	20.8-42 TR218

PRESSURE										H (*)
psi	**6**	**9**	**12**	**14**	**17**	**20**	**23**	**26**	**28**	**30**
bar	**0,4**	**0,6**	**0,8**	**1,0**	**1,2**	**1,4**	**1,6**	**1,8**	**1,9**	**2,1**
MAX. LOAD kg										
50 S		2710	2995	3280	3565	3845	4125			
40 S		2710	2995	3280	3565	3845	**4125**			
30 S		2900	3205	3510	3815	4115	4415			
10 LT S	3305	3690	4075	4460	4845	5230	5615	6000	6190	7015
10 HT S		2900	3205	3510	3815	4115	4415			

* Available also in Heavy Duty version

SIZE	Tread pattern	SW mm	OD mm	SLR mm	RC mm	SRI	Rim	Permitted Rims	Type	Tube
480/80R46 158A8 (158B) (18.4R46)	**TM600**	495	1964	887	5950	925	W16A	DD16 - DW16B	TUBELESS	

PRESSURE										H (*)
psi	**9**	**12**	**14**	**17**	**20**	**23**	**29**	**35**	**41**	**42**	**43**
bar	**0,6**	**0,8**	**1,0**	**1,2**	**1,4**	**1,6**	**2,0**	**2,4**	**2,8**	**2,9**	**3,0**
MAX. LOAD kg											
50 S	2000	2295	2635	2975	3315	3655	3995	4250			
40 S	2000	2295	2635	2975	3315	3655	3995	**4250**			
30 S	2140	2460	2820	3185	3550	3915	4275	4550			
10 LT S	2720	3125	3585	4050	4510	4975	5435	5740	6260	6390	7240
10 HT S	2140	2460	2820	3185	3550	3915	4275	4550			

SIZE	Tread pattern	SW mm	OD mm	SLR mm	RC mm	SRI	Rim	Permitted Rims	Type	Tube
520/85R46 158A8 (158B) (20.8R46)	**TM600**	535	2045	905	6160	975	DW16L	W16L - W18L - DW16L DD16L - DD18L	TUBELESS	

PRESSURE									H (*)
psi	**9**	**12**	**14**	**17**	**20**	**23**	**26**	**28**	**30**
bar	**0,6**	**0,8**	**1,0**	**1,2**	**1,4**	**1,6**	**1,8**	**1,9**	**2,1**
MAX. LOAD kg									
50 S	2765	3055	3345	3630	3910	4250			
40 S	2765	3055	3345	3630	3910	**4250**			
30 S	2960	3270	3580	3885	4185	4550			
10 LT S	3760	4155	4550	4935	5320	5780	6180	6375	7225
10 HT S	2960	3270	3580	3885	4185	4550			

SIZE	Tread pattern	SW mm	OD mm	SLR mm	RC mm	SRI	Rim	Permitted Rims	Type	Tube
480/80R50 159D	**TM600**	500	2045	935	6190	975	DW15B	DW16B	TUBELESS	

PRESSURE											H (*)
psi	**9**	**12**	**14**	**17**	**20**	**23**	**29**	**35**	**41**	**42**	**43**
bar	**0,6**	**0,8**	**1,0**	**1,2**	**1,4**	**1,6**	**2,0**	**2,4**	**2,8**	**2,9**	**3,0**
MAX. LOAD kg											
65 S			2715	3065	3415	3765	4115	**4375**			
50 S	2160	2485	2850	3220	3585	3955	4320	4595			
40 S	2255	2590	2975	3355	3740	4120	4505	4795			
30 S	2365	2720	3120	3525	3925	4330	4730	5035			
10 LT S	2800	3215	3690	4165	4645	5120	5595	5950	6370	6565	7440
10 HT S	2365	2720	3120	3525	3925	4330	4730	5035			

SIZE	Tread pattern	SW mm	OD mm	SLR mm	RC mm	SRI	Rim	Permitted Rims	Type	Tube
480/95R50 164A8 (164B)	**TM600**	500	2148	982	6490	1075	DW16B	DW16A - DW15A DW15B	TUBELESS	
With ProgressiveTraction® profile										

PRESSURE											H (*)
psi	**9**	**12**	**14**	**17**	**20**	**23**	**29**	**35**	**41**	**42**	**43**
bar	**0,6**	**0,8**	**1,0**	**1,2**	**1,4**	**1,6**	**2,0**	**2,4**	**2,8**	**2,9**	**3,0**
MAX. LOAD kg											
50 S	2350	2700	3100	3500	3900	4300	4700	5000			
40 S	2350	2700	3100	3500	3900	4300	4700	**5000**			
30 S	2515	2890	3320	3745	4175	4605	5030	5350			
10 LT S	3175	3645	4185	4725	5265	5805	6345	6750	7360	7595	8505
10 HT S	2515	2890	3320	3745	4175	4605	5030	5350			

SIZE	Tread pattern	SW mm	OD mm	SLR mm	RC mm	SRI	Rim	Permitted Rims	Type	Tube
480/80R50 159A8 (159B)	**TM600 Rice**	490	2045		6185	975	DW15B		TUBELESS	

PRESSURE											H (*)
psi	**9**	**12**	**15**	**17**	**20**	**23**	**29**	**35**	**41**	**42**	**44**
bar	**0,6**	**0,8**	**1,0**	**1,2**	**1,4**	**1,6**	**2,0**	**2,4**	**2,8**	**2,9**	**3,0**
MAX. LOAD kg											
50 S	2060	2365	2715	3065	3415	3765	4070	4375			
40 S	2060	2365	2715	3065	3415	3765	4070	**4375**			
30 S	2205	2530	2905	3280	3655	4030	4355	4685			
10 LT S	2770	3185	3655	4130	4600	5070	5485	5895	6445	6575	7450
10 HT S	2205	2530	2905	3280	3655	4030	4355	4685			

Design data = the dimensions of size in design data are calculated dimensions and not measured data on the normal production tire

For technical notes about pressure tables please refer to page 244.

TM150

BLUE TIRE TECHNOLOGY

The TM150, designed according to BLUE TIRE Technology, is Trelleborg's answer to the new generation of fertilizers and self-propelled high powered sprayers. In line with the VF standards, the TM150 tires can carry high loads while assuring low soil compaction, minimizing ruts and boosting crop yields.

SIZE	
VF 380/90R46	173D
VF 380/105R46	178D
VF 480/80R46	177D

SIZE	
VF 520/85R46	173D
VF 380/105R50	179D
VF 480/80R50	179D

SIZE	Tread pattern	SW mm	OD mm	SLR mm	RC mm	SRI	Rim	Permitted Rims	Type	Tube
VF 380/90R46 173D	TM150	390	1840	840	5550	875	DW13	W13 - DW12 - W12	TUBELESS	
PRESSURE										
psi		32	35	41	46	52	58	64		
bar		2,2	2,4	2,8	3,2	3,6	4,0	4,4		
MAX. LOAD kg										
Up to 65 Km/h (S)		4375	4625	5000	5450	5800	6000	**6500**		

SIZE	Tread pattern	SW mm	OD mm	SLR mm	RC mm	SRI	Rim	Permitted Rims	Type	Tube
VF 380/105R46 178D	TM150	400	1955	890	5950	975	DW13	W13 - DW12 - W12	TUBELESS	
PRESSURE										
psi		32	35	41	46	52	58	64		
bar		2,2	2,4	2,8	3,2	3,6	4,0	4,4		
MAX. LOAD kg										
Up to 65 Km/h (S)		5025	5175	5700	6150	6525	6900	**7500**		

SIZE	Tread pattern	SW mm	OD mm	SLR mm	RC mm	SRI	Rim	Permitted Rims	Type	Tube
VF480/80R46 177D	TM150	480	1950	880	5915	925	DW16	DW15	TUBELESS	
PRESSURE										
psi		23	32	38	42	46	49	52		
bar		1,6	2,2	2,6	2,9	3,2	3,4	3,6		
MAX. LOAD kg										
Up to 65 Km/h (S)		4955	5635	6075	6480	6850	7080	7300		

SIZE	Tread pattern	SW mm	OD mm	SLR mm	RC mm	SRI	Rim	Permitted Rims	Type	Tube
VF 520/85R46 173D	TM150	540	2055	905	6155	975	DW18L		TUBELESS	
PRESSURE										
psi		12	14	17	20	23	26	29		
bar		0,8	1,0	1,2	1,4	1,6	1,8	2,0		
MAX. LOAD kg										
Up to 65 Km/h (S)		3775	4335	4895	5455	6015	6225	6500		

SIZE	Tread pattern	SW mm	OD mm	SLR mm	RC mm	SRI	Rim	Permitted Rims	Type	Tube
VF 380/105R50 179D	TM150	410	2050	935	6215	1025	DW13	W13 - DW12 - W12	TUBELESS	
PRESSURE										
psi		32	35	41	46	52	58	64		
bar		2,2	2,4	2,8	3,2	3,6	4,0	4,4		
MAX. LOAD kg										
Up to 65 Km/h (S)		5195	5350	5890	6355	6745	7130	7750		

SIZE	Tread pattern	SW mm	OD mm	SLR mm	RC mm	SRI	Rim	Permitted Rims	Type	Tube
VF 480/80R50 179D	TM150	490	2050	930	6205	975	DW16	DW15	TUBELESS	
PRESSURE										
psi		23	32	38	42	46	49	52		
bar		1,6	2,2	2,6	2,9	3,2	3,4	3,6		
MAX. LOAD kg										
Up to 65 Km/h (S)		5260	5980	6450	6875	7270	7520	7750		

For technical notes about pressure tables please refer to page 244.

TM100

Narrow radial tire, particularly suitable for row crop working and highly regarded for the comfort it delivers.

SIZE	
230/95R32	128A8 (128B)
270/95R32	136A8 (136B)
230/95R36	130A8 (130B)
270/95R38	140A8 (140B)
210/95R44	120A8 (120B)
230/95R44	134A8 (134B)
270/95R44	142A8 (142B)

SIZE	
300/95R46	148A8 (148B)
230/95R48	136A8 (136B)
270/95R48	144A8 (144B)
380/90R50	151A8 (151B)
300/95R52	151A8 (151B)
380/90R54	152A8 (152B)

SIZE	Tread pattern	SW mm	OD mm	SLR mm	RC mm	SRI	Rim	Permitted Rims	Type	Tube
230/95R32 128A8 (128B)	**TM100**	235	1265	595	3900	600	W7	W6	TUBELESS	9.5-32 TR218

PRESSURE												
psi	**14**	**17**	**20**	**23**	**29**	**35**	**41**	**46**	**52**	**58**	**64**
bar	**1,0**	**1,2**	**1,4**	**1,6**	**2,0**	**2,4**	**2,8**	**3,2**	**3,6**	**4,0**	**4,4**
MAX. LOAD kg											
50 S						1300	1425	1550	1675	1800	
40 S	810	920	1010	1120	1210	1300	1425	1550	1675	**1800**	
30 S	870	985	1080	1195	1295	1390	1525	1660	1795	1930	
10 Cyc S	1095	1240	1365	1510	1630	1750	1920	2090	2260	2430	2700

SIZE	Tread pattern	SW mm	OD mm	SLR mm	RC mm	SRI	Rim	Permitted Rims	Type	Tube
270/95R32 136A8 (136B)	**TM100**	280	1345	635	4075	650	W9	W10 - W8	TUBELESS	12.4-32 TR218

PRESSURE												
psi	**14**	**17**	**20**	**23**	**29**	**35**	**41**	**46**	**52**	**58**	**64**
bar	**1,0**	**1,2**	**1,4**	**1,6**	**2,0**	**2,4**	**2,8**	**3,2**	**3,6**	**4,0**	**4,4**
MAX. LOAD kg											
50 S						1615	1770	1930	2085	2240	
40 S	1010	1145	1255	1390	1505	1615	1770	1930	2085	**2240**	
30 S	1080	1225	1345	1490	1610	1730	1895	2065	2230	2400	
10 Cyc S	1365	1545	1695	1875	2030	2180	2390	2605	2815	3025	3360

SIZE	Tread pattern	SW mm	OD mm	SLR mm	RC mm	SRI	Rim	Permitted Rims	Type	Tube
230/95R36 130A8 (130B)	**TM100**	235	1365	645	4210	650	W7	W6	TUBELESS	9.5-36 TR218

PRESSURE											
psi	**14**	**17**	**20**	**23**	**29**	**35**	**41**	**46**	**52**	**58**	**64**
bar	**1,0**	**1,2**	**1,4**	**1,6**	**2,0**	**2,4**	**2,8**	**3,2**	**3,6**	**4,0**	**4,4**
MAX. LOAD kg											
50 S						1370	1505	1635	1770	1900	
40 S	855	970	1065	1180	1275	1370	1505	1635	1770	**1900**	
30 S	915	1040	1140	1265	1365	1465	1610	1750	1895	2035	
10 Cyc S	1155	1310	1440	1595	1720	1850	2030	2210	2390	2565	2850

SIZE	Tread pattern	SW mm	OD mm	SLR mm	RC mm	SRI	Rim	Permitted Rims	Type	Tube
270/95R38 140A8 (140B)	**TM100**	285	1480	697	4505	725	W10	W8 - W9	TUBELESS	

PRESSURE											
psi	**14**	**17**	**20**	**23**	**29**	**35**	**41**	**46**	**52**	**58**	**64**
bar	**1,0**	**1,2**	**1,4**	**1,6**	**2,0**	**2,4**	**2,8**	**3,2**	**3,6**	**4,0**	**4,4**
MAX. LOAD kg											
50 S						1875	2050	2225	2375	2500	
40 S	1175	1325	1475	1600	1750	1875	2050	2225	2375	**2500**	
30 S	1260	1420	1580	1715	1875	2010	2195	2385	2545	2675	
10 Cyc S	1590	1790	1995	2160	2365	2535	2770	3005	3210	3375	3750

SIZE	Tread pattern	SW mm	OD mm	SLR mm	RC mm	SRI	Rim	Permitted Rims	Type	Tube
210/95R44 120A8 (120B)	**TM100**	210	1530	725	4670	750	W7	W6	TUBELESS	8.3/9.5-44 TR218

PRESSURE											
psi	**14**	**17**	**20**	**23**	**29**	**35**	**41**	**46**	**52**	**58**	**64**
bar	**1,0**	**1,2**	**1,4**	**1,6**	**2,0**	**2,4**	**2,8**	**3,2**	**3,6**	**4,0**	**4,4**
MAX. LOAD kg											
50 S						1400					
40 S	870	980	1095	1205	1320	**1400**					
30 S	930	1050	1170	1290	1410	1500					
10 Cyc S	1175	1325	1475	1630	1780	1890	2100				

According to availability

SIZE	Tread pattern	SW mm	OD mm	SLR mm	RC mm	SRI	Rim	Permitted Rims	Type	Tube
230/95R44 134A8 (134B)	**TM100**	235	1570	735	4850	750	W7	W8	TUBELESS	8.3/9.5-44 TR218

PRESSURE											
psi	**14**	**17**	**20**	**23**	**29**	**35**	**41**	**46**	**52**	**58**	**64**
bar	**1,0**	**1,2**	**1,4**	**1,6**	**2,0**	**2,4**	**2,8**	**3,2**	**3,6**	**4,0**	**4,4**
MAX. LOAD kg											
50 S						1530	1675	1825	1975	2120	
40 S	955	1085	1190	1315	1425	1530	1675	1825	1975	**2120**	
30 S	1025	1160	1275	1410	1520	1635	1795	1955	2110	2270	
10 Cyc S	1290	1460	1605	1775	1920	2065	2265	2465	2665	2865	3180

SIZE	Tread pattern	SW mm	OD mm	SLR mm	RC mm	SRI	Rim	Permitted Rims	Type	Tube
270/95R44 142A8 (142B)	**TM100**	270	1645	770	5020	800	W8	W9 - W10	TUBELESS	9.5-44 TR218

PRESSURE											
psi	**14**	**17**	**20**	**23**	**29**	**35**	**41**	**46**	**52**	**58**	**64**
bar	**1,0**	**1,2**	**1,4**	**1,6**	**2,0**	**2,4**	**2,8**	**3,2**	**3,6**	**4,0**	**4,4**
MAX. LOAD kg											
50 S						1910	2095	2280	2465	2650	
40 S	1195	1355	1485	1645	1780	1910	2095	2280	2465	**2650**	
30 S	1280	1450	1590	1760	1900	2045	2245	2440	2640	2840	
10 Cyc S	1610	1825	2005	2220	2400	2580	2830	3080	3330	3580	3975

SIZE	Tread pattern	SW mm	OD mm	SLR mm	RC mm	SRI	Rim	Permitted Rims	Type	Tube
300/95R46 148A8 (148B)	**TM100**	310	1755	840	5400	875	W10	W9 - W11	TUBELESS	12.4-46

PRESSURE											
psi	**14**	**17**	**20**	**23**	**29**	**35**	**41**	**46**	**52**	**58**	**64**
bar	**1,0**	**1,2**	**1,4**	**1,6**	**2,0**	**2,4**	**2,8**	**3,2**	**3,6**	**4,0**	**4,4**
MAX. LOAD kg											
50 S						2270	2490	2710	2930	3150	
40 S	1420	1610	1765	1955	2115	2270	2490	2710	2930	**3150**	
30 S	1520	1720	1890	2090	2260	2430	2665	2900	3135	3375	
10 Cyc S	1915	2170	2385	2640	2850	3065	3360	3660	3955	4255	4725

SIZE	Tread pattern	SW mm	OD mm	SLR mm	RC mm	SRI	Rim	Permitted Rims	Type	Tube
230/95R48 136A8 (136B)	**TM100**	238	1673	780	5170	800	W7	W8	TUBELESS	9.5-48

PRESSURE											
psi	**14**	**17**	**20**	**23**	**29**	**35**	**41**	**46**	**52**	**58**	**64**
bar	**1,0**	**1,2**	**1,4**	**1,6**	**2,0**	**2,4**	**2,8**	**3,2**	**3,6**	**4,0**	**4,4**
MAX. LOAD kg											
50 S						1615	1770	1930	2085	2240	
40 S	1010	1145	1255	1390	1505	1615	1770	1930	2085	**2240**	
30 S	1080	1225	1345	1490	1610	1730	1895	2065	2230	2400	
10 Cyc S	1365	1545	1695	1875	2030	2180	2390	2605	2815	3025	3360

SIZE	Tread pattern	SW mm	OD mm	SLR mm	RC mm	SRI	Rim	Permitted Rims	Type	Tube
270/95R48 144A8 (144B)	**TM100**	275	1750	830	5350	875	W8	W9 - W10	TUBELESS	11.2-48

PRESSURE											
psi	**14**	**17**	**20**	**23**	**29**	**35**	**41**	**46**	**52**	**58**	**64**
bar	**1,0**	**1,2**	**1,4**	**1,6**	**2,0**	**2,4**	**2,8**	**3,2**	**3,6**	**4,0**	**4,4**
MAX. LOAD kg											
50 S						2020	2215	2410	2605	2800	
40 S	1260	1430	1570	1740	1880	2020	2215	2410	2605	**2800**	
30 S	1350	1530	1680	1860	2010	2160	2370	2580	2790	3000	
10 Cyc S	1705	1930	2120	2345	2535	2725	2990	3255	3520	3780	4200

SIZE	Tread pattern	SW mm	OD mm	SLR mm	RC mm	SRI	Rim	Permitted Rims	Type	Tube
380/90R50 151A8 (151B)	**TM100**	390	1945	890	5885	975	W12	W11 - W13	TUBELESS	

PRESSURE									
psi	**14**	**17**	**20**	**23**	**29**	**35**	**41**	**42**	**43**
bar	**1,0**	**1,2**	**1,4**	**1,6**	**2,0**	**2,4**	**2,8**	**2,9**	**3,0**
MAX. LOAD kg									
50 S		2415	2695	2970	3245	3450			
40 S	2140	2415	2695	2970	3245	**3450**			
30 S	2290	2585	2880	3175	3475	3695			
10 LT S	2910	3285	3660	4040	4415	4695	5020	5175	5865
10 HT S	2290	2585	2880	3175	3475	3695			

SIZE	Tread pattern	SW mm	OD mm	SLR mm	RC mm	SRI	Rim	Permitted Rims	Type	Tube
300/95R52 151A8 (151B)	**TM100**	315	1905	890	5805	925	W10	W9 - W11 - DW10 DW11	TUBELESS	

PRESSURE											
psi	**14**	**17**	**20**	**23**	**29**	**35**	**41**	**46**	**52**	**58**	**64**
bar	**1,0**	**1,2**	**1,4**	**1,6**	**2,0**	**2,4**	**2,8**	**3,2**	**3,6**	**4,0**	**4,4**
MAX. LOAD kg											
50 S						2590	2830	3075	3280	3450	
40 S	1625	1830	2040	2210	2415	2590	2830	3075	3280	**3450**	
30 S	1740	1960	2180	2365	2585	2770	3030	3290	3510	3695	
10 Cyc S	2190	2470	2750	2985	3265	3495	3820	4150	4425	4660	5175

SIZE	Tread pattern	SW mm	OD mm	SLR mm	RC mm	SRI	Rim	Permitted Rims	Type	Tube
380/90R54 152A8 (152B)	**TM100**	380	2040	940	6175	1025	W12	W11 - W13	TUBELESS	

PRESSURE									
psi	**14**	**17**	**20**	**23**	**29**	**35**	**41**	**42**	**43**
bar	**1,0**	**1,2**	**1,4**	**1,6**	**2,0**	**2,4**	**2,8**	**2,9**	**3,0**
MAX. LOAD kg									
50 S		2485	2770	3055	3340	3550			
40 S	2205	2485	2770	3055	3340	**3550**			
30 S	2360	2660	2965	3270	3575	3800			
10 LT S	2995	3380	3770	4155	4540	4830	5170	5325	6035
10 HT S	2360	2660	2965	3270	3575	3800			

For technical notes about pressure tables please refer to page 244.

TM190

The special lug shape, which gradually widens toward the central tread zone, provides high resistance to gougings and lacerations and delivers even wear on both road and field. The TM190 is suitable for most operations and types of terrain, giving top performances in applications that involve a high level of road and field use, whether on normal cultivated terrain or hard, stony grounds.

The reduced height of its lugs makes it an especially good performer on grassland.

SIZE	
7.50R20	**6 PR**
9.5R20	**8 PR**
8.3R24	**8 PR**

SIZE	
9.5R24	**107A8**
12.4R36	**124A8 (121B)**

SIZE	Tread pattern	SW mm	OD mm	SLR mm	RC mm	SRI	Rim	Permitted Rims	Type	Tube
7.50R20 6 PR	**TM190**	200	910	422	2755	425	5.50F	6.00F	TUBE TYPE	7.5-20 TR15

PRESSURE							**H (*)**
psi	**14**	**17**	**20**	**23**	**26**	**29**	**33**
bar	**1,0**	**1,2**	**1,4**	**1,6**	**1,8**	**2,0**	**2,3**
MAX. LOAD kg							
40 S	390	435	475	615	550		
30 S	485	540	590	640	**685**		
10 LT S	605	675	735	795	855	910	1170
10 HT S	485	540	590	640	685		

According to availability

SIZE	Tread pattern	SW mm	OD mm	SLR mm	RC mm	SRI	Rim	Permitted Rims	Type	Tube
9.5R20 8 PR	**TM190**	245	937	436	2845	450	W8	W7 - W8H	TUBE TYPE	9.5-20 TR218

PRESSURE								**H (*)**
psi	**20**	**23**	**26**	**29**	**35**	**41**	**49**	**52**
bar	**1,4**	**1,6**	**1,8**	**2,0**	**2,4**	**2,8**	**3,4**	**3,6**
MAX. LOAD kg								
40 S	520	560	600	640	715	780		
30 S	650	705	755	800	890	**975**		
10 LT S			940	1000	1115	1220	1365	1660
10 HT S	650	705	755	800	890	975		

According to availability

SIZE	Tread pattern	SW mm	OD mm	SLR mm	RC mm	SRI	Rim	Permitted Rims	Type	Tube
8.3R24 8 PR	**TM190**	208	991	466	3010	475	W7	W6	TUBE TYPE	8.3-24 TR218

PRESSURE								H (*)
psi	**25**	**28**	**32**	**38**	**45**	**54**	**58**
bar	**1,7**	**1,9**	**2,2**	**2,6**	**3,1**	**3,7**	**4,0**
MAX. LOAD kg							
40 S	530	565	615	675	750		
30 S	660	700	765	845	**935**		
10 LT S		885	965	1065	1180	1310	1590
10 HT S	660	700	765	845	935		

According to availability

SIZE	Tread pattern	SW mm	OD mm	SLR mm	RC mm	SRI	Rim	Permitted Rims	Type	Tube
9.5R24 107A8	**TM190**	245	1039	485	3140	500	W8	W7 - W8H - W9	TUBE TYPE	8.3-24 TR218

PRESSURE										H (*)
psi	**6**	**9**	**12**	**14**	**17**	**20**	**23**	**26**	**28**	**30**
bar	**0,4**	**0,6**	**0,8**	**1,0**	**1,2**	**1,4**	**1,6**	**1,8**	**1,9**	**2,1**
MAX. LOAD kg										
50 S		585	645	705	770	830	900			
40 S		640	710	775	840	910	**975**			
30 S		690	760	835	905	980	1050			
10 LT S	780	875	965	1060	1150	1240	1340	1430	1470	1660
10 HT S		690	760	835	905	980	1050			

According to availability

SIZE	Tread pattern	SW mm	OD mm	SLR mm	RC mm	SRI	Rim	Permitted Rims	Type	Tube
12.4R36 124A8 (121B)	**TM190**	307	1446	671	4390	700	W11	W9 - W10 - DW10 DW11	TUBE TYPE	12.4-36 TR218

PRESSURE										H (*)
psi	**6**	**9**	**12**	**14**	**17**	**20**	**23**	**26**	**28**	**30**
bar	**0,4**	**0,6**	**0,8**	**1,0**	**1,2**	**1,4**	**1,6**	**1,8**	**1,9**	**2,1**
MAX. LOAD kg										
50 S		960	1060	1160	1260	1360	1450			
40 S		1050	1160	1270	1380	1490	**1600**			
30 S		1130	1250	1370	1490	1600	1720			
10 LT S	1280	1430	1580	1730	1880	2030	2180	2330	2400	2720
10 HT S		1130	1250	1370	1490	1600	1720			

For technical notes about pressure tables please refer to page 244.

MARSHLAND

Specialized line for use on waterlogged and marshy terrain.
The extremely deep lugs, together with the structure of the carcass, provide high traction and flotation.

SIZE		
380/85R38	**139A8**	**(139B)**
420/85R38	**144A8**	**(144B)**
460/85R38	**149A8**	**(149B)**

SIZE	Tread pattern	SW mm	OD mm	SLR mm	RC mm	SRI	Rim	Permitted Rims	Type	Tube
380/85R38 139A8 (139B)	**Marshland**	405	1660	760	4970	775	W13	W11-W12-DW11 DW12-DW13	TUBELESS	16.9-38 TR218

PRESSURE							
psi	**12**	**14**	**17**	**20**	**23**	**26**	**29**
bar	**0,8**	**1,0**	**1,2**	**1,4**	**1,6**	**1,8**	**2,0**
MAX. LOAD kg							
50 S	1560	1775	1995	2215	2430		
40 S	1560	1775	1995	2215	**2430**		
30 S	1665	1900	2135	2370	2605		
10 LT S	2120	2415	2710	3010	3305	3475	3645
10 HT S	1665	1900	2135	2370	2605		

SIZE	Tread pattern	SW mm	OD mm	SLR mm	RC mm	SRI	Rim	Permitted Rims	Type	Tube
420/85R38 144A8 (144B)	**Marshland**	460	1745	795	5220	800	W15L	W14L-DW14L DW15L	TUBELESS	16.9-38 TR218

PRESSURE							
psi	**12**	**14**	**17**	**20**	**23**	**26**	**29**
bar	**0,8**	**1,0**	**1,2**	**1,4**	**1,6**	**1,8**	**2,0**
MAX. LOAD kg							
50 S	1795	2045	2300	2550	2800		
40 S	1795	2045	2300	2550	**2800**		
30 S	1920	2190	2460	2730	3000		
10 LT S	2440	2780	3125	3470	3810	4005	4200
10 HT S	1920	2190	2460	2730	3000		

SIZE	Tread pattern	SW mm	OD mm	SLR mm	RC mm	SRI	Rim	Permitted Rims	Type	Tube
460/85R38 149A8 (149B)	**Marshland**	499	1810	815	5420	825	W16L	W15L-DW15L DW16L	TUBELESS	18.4-38 TR218

PRESSURE							
psi	**12**	**14**	**17**	**20**	**23**	**26**	**29**
bar	**0,8**	**1,0**	**1,2**	**1,4**	**1,6**	**1,8**	**2,0**
MAX. LOAD kg							
50 S	2080	2375	2665	2960	3250		
40 S	2080	2375	2665	2960	**3250**		
30 S	2230	2540	2855	3165	3480		
10 LT S	2830	3230	3625	4025	4420	4650	4875
10 HT S	2230	2540	2855	3165	3480		

For technical notes about pressure tables please refer to page 244.

TM300S

The particularly deep lugs and their special shape give the TM300S powerful grip which, along with the advantages of the radial construction, make this tire suitable for all types of heavy work, on wet or difficult surfaces.

SIZE	
13.6R36	**127A8 (124B)**

SIZE	Tread pattern	SW mm	OD mm	SLR mm	RC mm	SRI	Rim	Permitted Rims	Type	Tube
13.6R36 127A8 (124B)	**TM300S**	347	1510	698	4590	725	W12	W11 - DW11 DW12	TUBE TYPE	13.6-36 TR218

PRESSURE										**H (*)**
psi	**6**	**9**	**12**	**14**	**17**	**20**	**23**	**26**	**28**	**30**
bar	**0,4**	**0,6**	**0,8**	**1,0**	**1,2**	**1,4**	**1,6**	**1,8**	**1,9**	**2,1**
MAX. LOAD kg										
50 S		1050	1160	1270	1380	1490	1600			
40 S		1150	1270	1390	1510	1630	**1750**			
30 S		1230	1360	1490	1620	1750	1880			
10 LT S	1400	1560	1730	1890	2060	2220	2390	2550	2630	2980
10 HT S		1230	1360	1490	1620	1750	1880			

According to availability

For technical notes about pressure tables please refer to page 244.

TM3000

BLUE TIRE TECHNOLOGY

The TM3000, designed using the BLUE TIRE Technology, is Trelleborg's answer to the latest and future generations of harvesters and combine machines.
A new tread pattern, along with the advanced carcass design, maximise the load capacity of the tire at low inflation pressure, preserving the soil and the environment.
Matching sustainable and precision farming approaches, the TM3000 is the right choice to boost harvesting productivity.

SIZE		
VF 1000/50R25		184D
VF 620/70R26	CFO	173A8
VF 750/50R26		169D
VF 750/65R26	CFO	177A8 (177B)
650/75R32		172A8

SIZE		
IF 800/65R32	CFO	178A8
IF 800/70R32	CFO	182A8
IF 900/65R32	CFO	191A8 (191B)
VF 1050/50R32		198D
IF 800/70R38	CFO	187A8

SIZE	Tread pattern	SW mm	OD mm	SLR mm	RC mm	SRI	Rim	Permitted Rims	Type	Tube
VF 1000/50R25 184D	TM3000	1030	1640		4870	775	36.0 TH		TUBELESS	

PRESSURE								
psi	14	17	20	23	26	29	32	35
bar	1,0	1,2	1,4	1,6	1,8	2,0	2,2	2,4
MAX. LOAD kg								
Up to 65 Km/h (*)	5490	6120	6840	7470	7920	8370	8685	**9000**
Field Service (*)	5490	6120	6840	7470	7920	8370	8685	**9000**

Design data = the dimensions of size in design data are calculated dimensions and not measured data on the normal production tire

SIZE	Tread pattern	SW mm	OD mm	SLR mm	RC mm	SRI	Rim	Permitted Rims	Type	Tube
VF 620/70R26 CFO 173A8	TM3000	595	1500	645	4530	725	DW20B		TUBELESS	

PRESSURE									
psi	17	20	23	26	29	32	35	38	41
bar	1,2	1,4	1,6	1,8	2,0	2,2	2,4	2,6	2,8
MAX. LOAD kg									
Up to 40 Km/h (S)	4160	4615	5070	5330	5590	5755	5915	6210	**6500**
15 Cyc (*)	5535	6140	6745	7090	7435	7655	7870	8260	8645

SIZE	Tread pattern	SW mm	OD mm	SLR mm	RC mm	SRI	Rim	Permitted Rims	Type	Tube
VF 750/50R26 169D	**TM3000**	750	1415	615	4230	675	DW27B	DW25B	TUBELESS	

PRESSURE								
psi	**14**	**17**	**20**	**23**	**26**	**29**	**32**	**35**
bar	**1**	**1,2**	**1,4**	**1,6**	**1,8**	**2**	**2,2**	**2,4**
MAX. LOAD kg								
Up to 65 Km/h (*)	3485	3920	4355	4790	5065	5315	5540	**5800**
Field Service (*)	3485	3920	4355	4790	5065	5315	5540	5800

SIZE	Tread pattern	SW mm	OD mm	SLR mm	RC mm	SRI	Rim	Permitted Rims	Type	Tube
VF 750/65R26 CFO 177A8 (177B)	**TM3000**	740	1649			775	DW25B		TUBELESS	

PRESSURE							
psi	**17**	**20**	**23**	**26**	**29**	**32**	**35**
bar	**1,2**	**1,4**	**1,6**	**1,8**	**2**	**2,2**	**2,4**
MAX. LOAD kg							
Up to 50 Km/h (*)	5110	5625	6060	6425	6790	7045	**7300**
15 Cyc (*)	6800	7485	8060	8550	9035	9370	9710

Design data = the dimensions of size in design data are calculated dimensions and not measured data on the normal production tire

SIZE	Tread pattern	SW mm	OD mm	SLR mm	RC mm	SRI	Rim	Permitted Rims	Type	Tube
650/75R32 172A8	**TM3000**	618	1817	820	5500	825	DW20B		TUBELESS	

PRESSURE										
psi	**12**	**14**	**20**	**23**	**29**	**35**	**41**	**46**	**49**	**55**
bar	**0,8**	**1,0**	**1,4**	**1,6**	**2,0**	**2,4**	**2,8**	**3,2**	**3,4**	**3,8**
MAX. LOAD kg										
40 S	3010	3385	4110	4500	4900	5300	5820	**6300**		
30 S	3220	3620	4395	4770	5245	5715	6230	6740		
10 LT S	3870	4515	5635	6160	7020	7680	8370	9090	9270	9450
10 HT S	3220	3620	4395	4770	5245	5715	6230	6740		
10 Cyc S		4750	6070	6685	7765	8520	9285	10100	10305	10710

SIZE	Tread pattern	SW mm	OD mm	SLR mm	RC mm	SRI	Rim	Permitted Rims	Type	Tube
IF 800/65R32 CFO 178A8	**TM3000**	755	1850	810	5575	875	DW27B		TUBELESS	

PRESSURE							
psi	**17**	**20**	**23**	**26**	**29**	**32**	**35**
bar	**1,2**	**1,4**	**1,6**	**1,8**	**2,0**	**2,2**	**2,4**
MAX. LOAD kg							
Up to 40 Km/h (S)	5250	5775	6225	6565	6900	7200	**7500**
15 Cyc (*)	8140	8955	9650	10175	10695	11160	11625

SIZE	Tread pattern	SW mm	OD mm	SLR mm	RC mm	SRI	Rim	Permitted Rims	Type	Tube
IF 800/70R32 CFO 182A8	**TM3000**	775	1950	850	5845	925	DW27B		TUBELESS	
PRESSURE										
psi		**17**	**20**	**23**	**26**	**29**	**32**	**35**		
bar		**1,2**	**1,4**	**1,6**	**1,8**	**2,0**	**2,2**	**2,4**		
MAX. LOAD kg										
Up to 40 Km/h (S)		5780	6460	7140	7480	7820	8160	**8500**		
15 Cyc (*)		8960	10015	11070	11595	12125	12650	13175		

SIZE	Tread pattern	SW mm	OD mm	SLR mm	RC mm	SRI	Rim	Permitted Rims	Type	Tube
IF 900/65R32 CFO 191A8 (191B)	**TM3000**	900	1985	875	5975	925	DW31B	DW30B	TUBELESS	
PRESSURE										
psi		**17**	**20**	**23**	**29**	**35**	**41**	**46**		
bar		**1,2**	**1,4**	**1,6**	**2**	**2,4**	**2,8**	**3,2**		
MAX. LOAD kg										
Up to 40 Km/h (S)		6540	7085	7740	8610	9265	10135	**10900**		
15 Cyc (*)		10135	10980	11995	13345	14360	15710	16895		

Design data = the dimensions of size in design data are calculated dimensions and not measured data on the normal production tire

SIZE	Tread pattern	SW mm	OD mm	SLR mm	RC mm	SRI	Rim	Permitted Rims	Type	Tube
VF 1050/50R32 198D	**TM3000**	1035	1860	820	5570	875	36.00 VA		TUBELESS	
PRESSURE										
psi		**14**	**17**	**23**	**29**	**35**	**41**	**46**	**52**	
bar		**1,0**	**1,2**	**1,6**	**2,0**	**2,4**	**2,8**	**3,2**	**3,6**	
MAX. LOAD kg										
Up to 40 Km/h (*)		6500	7335	9000	10000	10600	11800	12500	**13200**	
Field Service (*)		6500	7335	9000	10000	10600	11800	12500	**13200**	

SIZE	Tread pattern	SW mm	OD mm	SLR mm	RC mm	SRI	Rim	Permitted Rims	Type	Tube
IF 800/70R38 CFO 187A8	**TM3000**	780	2050	910	6190	975	DW27B		TUBELESS	
PRESSURE										
psi		**17**	**20**	**23**	**26**	**29**	**32**	**35**	**38**	**41**
bar		**1,2**	**1,4**	**1,6**	**1,8**	**2,0**	**2,2**	**2,4**	**2,6**	**2,8**
MAX. LOAD kg										
Up to 40 Km/h (S)		6300	7020	7740	8100	8385	8630	8875	9315	**9750**
15 Cyc (*)		9765	10885	12000	12555	13000	13380	13760	14440	15115

For technical notes about pressure tables please refer to page 244.

TM2000

Radial tire for harvesting and combine machines, the result of the advanced technology and experience of Trelleborg in agricultural tires.
Product Plus:

- High load capacity even at low pressure. The extensive footprint area allows a greater load to be carried for a given inflation pressure compared to standard tires
- Excellent traction capacity thanks to the flexible radial carcass and deep tractive lugs
- Maximum resistance to impact and puncturing ensured by the high quality materials used
- Optimal lateral stability even on difficult and very uneven terrain. Low vibration levels and high comfort in all working conditions

SIZE		
620/75R26	**166A8**	**(23.1R26)**
650/75R32	**172A8**	**(24.5R32)**
710/75R32	**177A8**	

SIZE		
800/65R32	**178A8**	**(30.5LR32)**
900/60R32	**181A8**	

SIZE	Tread pattern	SW mm	OD mm	SLR mm	RC mm	SRI	Rim	Permitted Rims	Type	Tube
620/75R26 166A8 (23.1R26)	**TM2000**	633	1590	716	4850	750	DW20B		TUBELESS	

PRESSURE										
psi	**12**	**14**	**20**	**23**	**29**	**35**	**41**	**46**	**49**	**55**
bar	**0,8**	**1,0**	**1,4**	**1,6**	**2,0**	**2,4**	**2,8**	**3,2**	**3,4**	**3,8**
MAX. LOAD kg										
40 S	2530	2845	3455	3750	4120	4500	4900	**5300**		
30 S	2710	3045	3700	4015	4410	4810	5240	5670		
10 LT S	3255	3795	4740	5185	5905	6460	7045	7650	7800	7950
10 HT S	2710	3045	3700	4015	4410	4810	5240	5670		
10 Cyc S		3995	5110	5625	6535	7165	7810	8495	8670	9010

SIZE	Tread pattern	SW mm	OD mm	SLR mm	RC mm	SRI	Rim	Permitted Rims	Type	Tube
650/75R32 172A8 (24.5R32)	**TM2000**	662	1817	805	5495	825	DW20B		TUBELESS	24.5-32

PRESSURE										
psi	**12**	**14**	**20**	**23**	**29**	**35**	**41**	**46**	**49**	**55**
bar	**0,8**	**1,0**	**1,4**	**1,6**	**2,0**	**2,4**	**2,8**	**3,2**	**3,4**	**3,8**
MAX. LOAD kg										
40 S	3010	3385	4110	4500	4900	5300	5820	**6300**		
30 S	3220	3620	4395	4770	5245	5715	6230	6740		
10 LT S	3870	4515	5635	6160	7020	7680	8370	9090	9270	9450
10 HT S	3220	3620	4395	4770	5245	5715	6230	6740		
10 Cyc S		4750	6070	6685	7765	8520	9285	10100	10305	10710

SIZE	Tread pattern	SW mm	OD mm	SLR mm	RC mm	SRI	Rim	Permitted Rims	Type	Tube
710/75R32 177A8	**TM2000**	735	1850	830	5595	875	DW23B	DW21B	TUBELESS	30.5-32

PRESSURE										
psi	**12**	**14**	**20**	**23**	**29**	**35**	**41**	**46**	**49**	**55**
bar	**0,8**	**1,0**	**1,4**	**1,6**	**2,0**	**2,4**	**2,8**	**3,2**	**3,4**	**3,8**
MAX. LOAD kg										
40 S	3490	3925	4760	5170	5680	6195	6750	**7300**		
30 S	3735	4195	5095	5530	6080	6625	7220	7815		
10 LT S	4170	4860	6210	6840	7945	8715	9495	10330	10540	10950
10 HT S	3735	4195	5095	5530	6080	6625	7220	7815		
10 Cyc S		5510	7040	7755	9005	9880	10765	11705	11945	12410

SIZE	Tread pattern	SW mm	OD mm	SLR mm	RC mm	SRI	Rim	Permitted Rims	Type	Tube
800/65R32 178A8	**TM2000**	800	1846	829	5595	875	DW27B	DW25B - DH27 - DW28B	TUBELESS	30.5-32

PRESSURE										
psi	**12**	**14**	**20**	**23**	**29**	**35**	**41**	**46**	**49**	**55**
bar	**0,8**	**1,0**	**1,4**	**1,6**	**2,0**	**2,4**	**2,8**	**3,2**	**3,4**	**3,8**
MAX. LOAD kg										
40 S	3580	4030	4890	5300	5835	6300	6930	**7500**		
30 S	3835	4310	5235	5680	6240	6805	7415	8025		
10 LT S	4605	5373	6710	7335	8355	9145	9965	10820	11035	11250
10 HT S	3835	4310	5235	5680	6240	6805	7415	8025		
10 Cyc S		5655	7230	7960	9250	10140	11055	12025	12265	12750

SIZE	Tread pattern	SW mm	OD mm	SLR mm	RC mm	SRI	Rim	Permitted Rims	Type	Tube
900/60R32 181A8	**TM2000**	890	1900	855	5765	925	DW30B	DW27B - DW28B	TUBELESS	30.5-32

PRESSURE										
psi	**12**	**14**	**20**	**23**	**29**	**35**	**41**	**46**	**49**	**55**
bar	**0,8**	**1,0**	**1,4**	**1,6**	**2,0**	**2,4**	**2,8**	**3,2**	**3,4**	**3,8**
MAX. LOAD kg										
40 S	3795	4290	5280	5860	6520	7015	7675	**8250**		
30 S	4065	4595	5650	6270	6975	7505	8210	8830		
10 LT S	5165	5835	7185	7970	8865	9540	10435	11220	11470	12375
10 HT S	4065	4595	5650	6270	6975	7505	8210	8830		
10 Cyc S		6480	7975	8845	9845	10590	11590	12460	13010	14025

For technical notes about pressure tables please refer to page 244.

TM90

The Trelleborg TM90 offers a complete range of sizes for tractors up to 160 hp. Engineered as a tubeless tire, the R-1 pattern can be used in a variety of applications, both in the field and on the road.

SIZE		
8.3-24	8 PR	105A8
9.5-24	8 PR	112A8
11.2-24	8 PR	116A8
12.4-24	12 PR	124A8
13.6-24	8 PR	123A8
14.9-24	8 PR	128A8
16.9-24	12 PR	136A8
14.9-26	8 PR	129A8
16.9-26 Harvester	10 PR	137A6
13.6-28	12 PR	130A8
14.9-28	12 PR	134A8

SIZE		
16.9-28	8 PR	135A8
14.9-30	8 PR	131A8
16.9-30	8 PR	137A8
18.4-30	12 PR	145A8
16.9-34	8 PR	139A8
18.4-34	12 PR	146A8
12.4-36	12 PR	131A8
15.5-38	8 PR	129A8
16.9-38	8 PR	141A8
18.4-38	12 PR	149A8
20.8-38	12 PR	152A8

SIZE	Tread pattern	SW mm	OD mm	SLR mm	RC mm	SRI	Rim	Permitted Rims	Type	Tube
8.3-24 8 PR 105A8	TM90	209	992	478	3010	475	W7	W6	TUBELESS	

PRESSURE									H (*)
psi	17	23	29	35	41	45	49	54	55
bar	1,2	1,6	2,0	2,4	2,8	3,1	3,4	3,7	3,8
MAX. LOAD kg									
40 S	530	630	715	795	870	925			
30 S	565	675	765	850	930	990			
25 S	590	700	795	880	965	1025			
10 LT S	750	875	985	1090	1185	1255	1325	1390	1555
10 HT S	565	675	765	850	930	990			

SIZE	Tread pattern	SW mm	OD mm	SLR mm	RC mm	SRI	Rim	Permitted Rims	Type	Tube
9.5-24 8 PR 112A8	**TM90**	238	1050	502	3175	500	W8	W7	TUBELESS	

PRESSURE									H (*)
psi	**12**	**17**	**23**	**29**	**35**	**41**	**46**	**49**	**51**
bar	**0,8**	**1,2**	**1,6**	**2,0**	**2,4**	**2,8**	**3,2**	**3,4**	**3,5**
MAX. LOAD kg									
40 S	540	680	805	920	1025	**1120**			
30 S	580	730	860	985	1095	1200			
25 S	600	755	895	1020	1140	1245			
10 LT S	780	960	1115	1255	1385	1510	1625	1680	1905
10 HT S	580	730	860	985	1095	1200			

SIZE	Tread pattern	SW mm	OD mm	SLR mm	RC mm	SRI	Rim	Permitted Rims	Type	Tube
11.2-24 8 PR 116A8	**TM90**	295	1100	522	3325	550	W10	W9	TUBELESS	

PRESSURE									H (*)
psi	**9**	**14**	**20**	**23**	**29**	**35**	**38**	**41**	**44**
bar	**0,6**	**1,0**	**1,4**	**1,6**	**2,0**	**2,4**	**2,6**	**2,8**	**3,0**
MAX. LOAD kg									
40 S	555	750	910	985	1125	**1250**			
30 S	595	805	975	1055	1205	1340			
25 S	615	835	1010	1095	1250	1390			
10 LT S	835	1065	1265	1360	1530	1690	1765	1840	2125
10 HT S	595	805	975	1055	1205	1340			

SIZE	Tread pattern	SW mm	OD mm	SLR mm	RC mm	SRI	Rim	Permitted Rims	Type	Tube
12.4-24 12 PR 124A8 (128A6)	**TM90**	322	1170	552	3520	550	W11	W9 - W10	TUBELESS	

PRESSURE									H (*)
psi	**9**	**16**	**25**	**32**	**41**	**48**	**52**	**58**	**60**
bar	**0,6**	**1,1**	**1,7**	**2,2**	**2,8**	**3,3**	**3,6**	**4,0**	**4,1**
MAX. LOAD kg									
40 S	590	840	1085	1260	1455	**1600**			
30 S	655	930	1205	1400	1615	**1800**			
25 S	720	1025	1325	1535	1775	1950			
10 LT S	885	1190	1500	1720	1965	2155	2260	2400	2710
10 HT S	655	930	1205	1400	1615	1800			

SIZE	Tread pattern	SW mm	OD mm	SLR mm	RC mm	SRI	Rim	Permitted Rims	Type	Tube
13.6-24 8 PR 123A8	**TM90**	350	1210	570	3640	575	W12	W11	TUBELESS	

PRESSURE									**H (*)**
psi	**9**	**14**	**20**	**23**	**26**	**29**	**32**	**35**	**36**
bar	**0,6**	**1,0**	**1,4**	**1,6**	**1,8**	**2,0**	**2,2**	**2,4**	**2,5**
MAX. LOAD kg									
40 S	765	1035	1260	1360	1455	**1550**			
30 S	820	1105	1350	1455	1555	1660			
25 S	850	1150	1400	1510	1615	1720			
10 LT S	1150	1470	1745	1870	1990	2105	2215	2325	2635
10 HT S	820	1105	1350	1455	1555	1660			

SIZE	Tread pattern	SW mm	OD mm	SLR mm	RC mm	SRI	Rim	Permitted Rims	Type	Tube
14.9-24 8 PR 128A8	**TM90**	380	1270	594	3790	600	W13	W11 - W12	TUBELESS	

PRESSURE									**H (*)**
psi	**9**	**12**	**14**	**17**	**20**	**23**	**26**	**30**	**32**
bar	**0,6**	**0,8**	**1,0**	**1,2**	**1,4**	**1,6**	**1,8**	**2,1**	**2,2**
MAX. LOAD kg									
40 S	945	1120	1275	1420	1555	1680	**1800**		
30 S	1010	1200	1365	1520	1665	1800	1925		
25 S	1050	1245	1415	1575	1725	1865	2000		
10 LT S	1420	1630	1825	2005	2170	2330	2485	2700	3020
10 HT S	1010	1200	1365	1520	1665	1800	1925		

SIZE	Tread pattern	SW mm	OD mm	SLR mm	RC mm	SRI	Rim	Permitted Rims	Type	Tube
16.9-24 12 PR 136A8 (140A6)	**TM90**	445	1345	630	4025	625	W15L	W14L	TUBELESS	

PRESSURE									**H (*)**
psi	**9**	**13**	**19**	**23**	**28**	**33**	**35**	**38**	**39**
bar	**0,6**	**0,9**	**1,3**	**1,6**	**1,9**	**2,3**	**2,4**	**2,6**	**2,7**
MAX. LOAD kg									
40 S	1020	1295	1605	1810	2005	**2240**			
30 S	1130	1435	1780	2010	2225	**2500**			
25 S	1245	1580	1960	2210	2445	2735			
10 LT S	1530	1870	2260	2525	2770	3075	3150	3290	3360
10 HT S	1130	1435	1780	2010	2225	2485			

SIZE	Tread pattern	SW mm	OD mm	SLR mm	RC mm	SRI	Rim	Permitted Rims	Type	Tube
14.9-26 8 PR 129A8	**TM90**	376	1315	612	3940	625	W13	W11 - W12	TUBELESS	

PRESSURE									**H (*)**
psi	**9**	**12**	**14**	**17**	**20**	**23**	**26**	**30**	**32**
bar	**0,6**	**0,8**	**1,0**	**1,2**	**1,4**	**1,6**	**1,8**	**2,1**	**2,2**
MAX. LOAD kg									
40 S	975	1150	1310	1460	1595	1725	**1850**		
30 S	1045	1230	1400	1560	1705	1845	1980		
25 S	1080	1275	1455	1620	1770	1915	2055		
10 LT S	1460	1675	1875	2060	2230	2395	2550	2775	3105
10 HT S	1045	1230	1400	1560	1705	1845	1980		

SIZE	Tread pattern	SW mm	OD mm	SLR mm	RC mm	SRI	Rim	Permitted Rims	Type	Tube
16.9-26 10 PR 137A6	**TM90 Harvester**	430	1385	645		650	DW15L		TUBELESS	

PRESSURE									**H (*)**
psi	**9**	**14**	**20**	**23**	**26**	**29**	**32**	**35**	**36**
bar	**0,6**	**1,0**	**1,4**	**1,6**	**1,8**	**2,0**	**2,2**	**2,4**	**2,5**
MAX. LOAD kg									
40 S	1020	1380	1680	1820	1950	2070			
30 S	1135	1535	1865	2020	2165	**2300**			
20 S	1360	1840	2240	2425	2600	2760			
10 LT S	1395	1885	2295	2480	2655	2825	2990	3145	3220
10 HT S	1215	1640	1995	2160	2315	2460			
10 Cyc S	1695	2290	2785	3010	3225	3430	3630	3820	3910

Design data = the dimensions of size in design data are calculated dimensions and not measured data on the normal production tire

SIZE	Tread pattern	SW mm	OD mm	SLR mm	RC mm	SRI	Rim	Permitted Rims	Type	Tube
13.6-28 12 PR 130A8 (134A6)	**TM90**	350	1305	612	3910	625	W12		TUBELESS	

PRESSURE									
psi	**9**	**16**	**22**	**28**	**33**	**42**	**46**	**49**	**52**
bar	**0,6**	**1,1**	**1,5**	**1,9**	**2,3**	**2,9**	**3,2**	**3,4**	**3,6**
MAX. LOAD kg									
40 S	755	1080	1290	1485	1660	**1900**			
30 S	840	1200	1430	1650	1845	**2120**			
25 S	920	1320	1575	1810	2025	2320			
10 LT S	1135	1525	1795	2035	2260	2565	2710	2805	3215
10 HT S	840	1200	1430	1650	1845	2110			

SIZE	Tread pattern	SW mm	OD mm	SLR mm	RC mm	SRI	Rim	Permitted Rims	Type	Tube
14.9-28 12 PR 134A8 (138A6)	**TM90**	385	1370	640	4095	650	W13	W11 - W12	TUBELESS	

PRESSURE									H (*)
psi	**9**	**13**	**19**	**25**	**30**	**38**	**42**	**45**	**46**
bar	**0,6**	**0,9**	**1,3**	**1,7**	**2,1**	**2,6**	**2,9**	**3,1**	**3,2**
MAX. LOAD kg									
40 S	900	1140	1415	1655	1870	**2120**			
30 S	1000	1265	1570	1835	2075	**2360**			
25 S	1100	1390	1725	2020	2280	2585			
10 LT S	1350	1640	1985	2285	2565	2885	3065	3180	3570
10 HT S	1000	1265	1570	1835	2075	2355			

SIZE	Tread pattern	SW mm	OD mm	SLR mm	RC mm	SRI	Rim	Permitted Rims	Type	Tube
16.9-28 8 PR 135A8	**TM90**	435	1435	660	4285	675	W15		TUBELESS	

PRESSURE									H (*)
psi	**9**	**12**	**14**	**17**	**20**	**23**	**25**	**29**	**30**
bar	**0,6**	**0,8**	**1,0**	**1,2**	**1,4**	**1,6**	**1,7**	**2,0**	**2,1**
MAX. LOAD kg									
40 S	1185	1405	1600	1780	1945	2105	**2180**		
30 S	1270	1505	1710	1905	2080	2250	2335		
25 S	1315	1560	1775	1975	2160	2335	2420		
10 LT S	1780	2035	2275	2495	2705	2900	2995	3270	3680
10 HT S	1270	1505	1710	1905	2080	2250	2335		

SIZE	Tread pattern	SW mm	OD mm	SLR mm	RC mm	SRI	Rim	Permitted Rims	Type	Tube
14.9-30 8 PR 131A8	**TM90**	377	1416	652	4210	675	W13L	W11 - W12	TUBELESS	

PRESSURE									H (*)
psi	**9**	**12**	**14**	**17**	**20**	**23**	**26**	**30**	**32**
bar	**0,6**	**0,8**	**1,0**	**1,2**	**1,4**	**1,6**	**1,8**	**2,1**	**2,2**
MAX. LOAD kg									
40 S	1025	1215	1385	1540	1685	1820	**1950**		
30 S	1095	1300	1480	1650	1805	1945	2085		
25 S	1140	1350	1535	1710	1870	2020	2165		
10 LT S	1540	1765	1975	2170	2350	2525	2690	2925	3270
10 HT S	1095	1300	1480	1650	1805	1945	2085		

SIZE	Tread pattern	SW mm	OD mm	SLR mm	RC mm	SRI	Rim	Permitted Rims	Type	Tube
16.9-30 8 PR 137A8	**TM90**	430	1485	685	4455	700	W15L	W14L	TUBELESS	

PRESSURE									H (*)
psi	**9**	**12**	**14**	**17**	**20**	**23**	**25**	**29**	**30**
bar	**0,6**	**0,8**	**1,0**	**1,2**	**1,4**	**1,6**	**1,7**	**2,0**	**2,1**
MAX. LOAD kg									
40 S	1250	1480	1685	1875	2055	2220	**2300**		
30 S	1340	1585	1805	2005	2200	2375	2460		
25 S	1390	1645	1870	2080	2280	2465	2555		
10 LT S	1875	2150	2400	2635	2855	3060	3160	3450	3885
10 HT S	1340	1585	1805	2005	2200	2375	2460		

SIZE	Tread pattern	SW mm	OD mm	SLR mm	RC mm	SRI	Rim	Permitted Rims	Type	Tube
18.4-30 12 PR 145A8 (149A6)	**TM90**	472	1560	725	4665	725	W16L	W15L	TUBELESS	

PRESSURE									H (*)
psi	**9**	**13**	**19**	**23**	**28**	**32**	**35**	**38**	**39**
bar	**0,6**	**0,9**	**1,3**	**1,6**	**1,9**	**2,2**	**2,4**	**2,6**	**2,7**
MAX. LOAD kg									
40 S	1355	1720	2130	2405	2660	**2900**			
30 S	1505	1910	2365	2670	2955	**3250**			
25 S	1655	2100	2600	2935	3245	3540			
10 LT S	2035	2475	2990	3340	3665	3970	4160	4350	4875
10 HT S	1505	1910	2365	2670	2955	3250			

SIZE	Tread pattern	SW mm	OD mm	SLR mm	RC mm	SRI	Rim	Permitted Rims	Type	Tube
16.9-34 8 PR 139A8	**TM90**	430	1583	728	4760	750	W15L	W14L	TUBELESS	

PRESSURE									H (*)
psi	**9**	**12**	**14**	**17**	**20**	**23**	**25**	**29**	**30**
bar	**0,6**	**0,8**	**1,0**	**1,2**	**1,4**	**1,6**	**1,7**	**2,0**	**2,1**
MAX. LOAD kg									
40 S	1320	1565	1780	1980	2170	2345	**2430**		
30 S	1410	1675	1905	2120	2320	2510	2600		
25 S	1465	1735	1975	2200	2410	2605	2695		
10 LT S	1980	2270	2535	2780	3015	3235	3340	3645	4100
10 HT S	1410	1675	1905	2120	2320	2510	2600		

SIZE	Tread pattern	SW mm	OD mm	SLR mm	RC mm	SRI	Rim	Permitted Rims	Type	Tube
18.4-34 12 PR 146A8 (151A6)	**TM90**	475	1660	768	4965	775	W16L	W15L	TUBELESS	

PRESSURE									H (*)
psi	**9**	**13**	**19**	**23**	**28**	**32**	**35**	**38**	**39**
bar	**0,6**	**0,9**	**1,3**	**1,6**	**1,9**	**2,2**	**2,4**	**2,6**	**2,7**
MAX. LOAD kg									
40 S	1405	1780	2205	2490	2755	**3000**			
30 S	1560	1975	2450	2765	3060	**3450**			
25 S	1715	2170	2690	3040	3360	3660			
10 LT S	2105	2560	3095	3455	3790	4105	4305	4500	5045
10 HT S	1560	1975	2450	2765	3060	3330			

SIZE	Tread pattern	SW mm	OD mm	SLR mm	RC mm	SRI	Rim	Permitted Rims	Type	Tube
12.4-36 12 PR 131A8 (135A6)	**TM90**	318	1475	686	4395	700	W11	W9 - W10	TUBELESS	

PRESSURE									
psi	**9**	**16**	**25**	**32**	**41**	**48**	**52**	**56**	**60**
bar	**0,6**	**1,1**	**1,7**	**2,2**	**2,8**	**3,3**	**3,6**	**3,9**	**4,1**
MAX. LOAD kg									
40 S	720	1025	1325	1540	1770	**1950**			
30 S	800	1140	1470	1710	1965	**2180**			
25 S	880	1250	1615	1880	2160	2380			
10 LT S	1080	1450	1825	2100	2395	2625	2755	2885	3305
10 HT S	800	1140	1470	1710	1965	2180			

SIZE	Tread pattern	SW mm	OD mm	SLR mm	RC mm	SRI	Rim	Permitted Rims	Type	Tube
15.5-38 8 PR 129A8	**TM90**	390	1580	725	4700	750	W14L		TUBELESS	

PRESSURE									H (*)
psi	**9**	**12**	**14**	**17**	**20**	**23**	**26**	**30**	**32**
bar	**0,6**	**0,8**	**1,0**	**1,2**	**1,4**	**1,6**	**1,8**	**2,1**	**2,2**
MAX. LOAD kg									
40 S	975	1150	1310	1460	1595	1725	**1850**		
30 S	1045	1230	1400	1560	1705	1845	1980		
25 S	1080	1275	1455	1620	1770	1915	2055		
10 LT S	1460	1675	1875	2060	2230	2395	2550	2775	3105
10 HT S	1045	1230	1400	1560	1705	1845	1980		

SIZE	Tread pattern	SW mm	OD mm	SLR mm	RC mm	SRI	Rim	Permitted Rims	Type	Tube
16.9-38 8 PR 141A8	**TM90**	436	1688	766	5000	800	W15L	W14L	TUBELESS	

PRESSURE									**H (*)**
psi	**9**	**12**	**14**	**17**	**20**	**23**	**25**	**29**	**30**
bar	**0,6**	**0,8**	**1,0**	**1,2**	**1,4**	**1,6**	**1,7**	**2,0**	**2,1**
MAX. LOAD kg									
40 S	1400	1655	1890	2100	2300	2485	**2575**		
30 S	1500	1770	2020	2245	2460	2660	2755		
25 S	1555	1835	2100	2330	2555	2760	2860		
10 LT S	2100	2405	2685	2950	3195	3425	3540	3865	4345
10 HT S	1500	1770	2020	2245	2460	2660	2755		

SIZE	Tread pattern	SW mm	OD mm	SLR mm	RC mm	SRI	Rim	Permitted Rims	Type	Tube
18.4-38 12 PR 149A8 (153A6)	**TM90**	480	1770	816	5290	825	W16L	W15L	TUBELESS	

PRESSURE									**H(*)**
psi	**9**	**13**	**19**	**23**	**28**	**32**	**35**	**38**	**39**
bar	**0,6**	**0,9**	**1,3**	**1,6**	**1,9**	**2,2**	**2,4**	**2,6**	**2,7**
MAX. LOAD kg									
40 S	1520	1925	2390	2700	2985	**3250**			
30 S	1685	2135	2655	2995	3315	**3650**			
25 S	1855	2350	2915	3295	3640	3965			
10 LT S	2280	2775	3350	3740	4105	4445	4665	4875	5465
10 HT S	1685	2135	2655	2995	3315	3610			

SIZE	Tread pattern	SW mm	OD mm	SLR mm	RC mm	SRI	Rim	Permitted Rims	Type	Tube
20.8-38 12 PR 152A8 (156A6)	**TM90**	555	1845	850		875	W18L	W16L	TUBELESS	

PRESSURE									**H(*)**
psi	**9**	**13**	**19**	**22**	**25**	**28**	**30**	**32**	**33**
bar	**0,6**	**0,9**	**1,3**	**1,5**	**1,7**	**1,9**	**2,1**	**2,2**	**2,3**
MAX. LOAD kg									
40 S	1810	2295	2845	3090	3325	**3550**			
30 S	2010	2545	3160	3430	3690	**4000**			
25 S	2210	2800	3470	3770	4055	4330			
10 LT S	2715	3310	4005	4325	4625	4915	5190	5325	5925
10 HT S	2010	2545	3160	3430	3690	4000			

For technical notes about pressure tables please refer to page 244.

TD27

The tread pattern of the TD27 allows maximum use of this tire in both field and road operations.

SIZE		
4.00-15	**4 PR**	**(66A6)**
5.00-15	**6 PR**	**(82A6)**
5.50-16	**6 PR**	**(86A6)**
6.00-16	**8 PR**	**(94A6)**

SIZE		
6.50-16	**8 PR**	**(98A6)**
7.50-16	**8 PR**	**(103A6)**
7.50-16	**10 PR**	**(109A6)**

SIZE	Tread pattern	SW mm	OD mm	SLR mm	RC mm	Rims	Tube
4.00-15 4 PR (66A6)	**TD27**	118	618	291	1883	**3.00D** - 4J	4.00-15/125-15 TR13

PRESSURE									
psi	**26**	**29**	**32**	**35**	**38**	**41**	**43**	**46**	**49**
bar	**1,8**	**2,0**	**2,2**	**2,4**	**2,6**	**2,8**	**3,0**	**3,2**	**3,4**
MAX. LOAD kg									
25	240	255	270	280	295	310	320	335	345
30	205	220	235	245	255	270	280	290	**300**
35	185	200	210	220	230	240	250	260	270
40	165	175	185	195	205	215	225	230	240
F									450

SIZE	Tread pattern	SW mm	OD mm	SLR mm	RC mm	Rims	Tube
5.00-15 6 PR (82A6)	**TD27**	145	660	311	2022	**4J** - 3.00D - 3.50D - 4.00E - 4.5J	155/165R15 TR15

PRESSURE												
psi	**26**	**29**	**32**	**35**	**38**	**41**	**43**	**46**	**49**	**54**	**67**
bar	**1,8**	**2,0**	**2,2**	**2,4**	**2,6**	**2,8**	**3,0**	**3,2**	**3,4**	**3,7**	**4,6**
MAX. LOAD kg											
25	360	380	405	425	445	465	485	500	520	545	
30	310	330	350	370	385	405	420	435	450	**475**	
35		300	315	330	345	365	380	390	405	430	
40	250	265	280	295	310	325	335	350	360	380	
F											710
Loader											945

SIZE	Tread pattern	SW mm	OD mm	SLR mm	RC mm	Rims	Tube
5.50-16 6 PR (86A6)	**TD27**	155	719	330	2164	**4.00E** - 3.50D - 4.25KA - 4.50E	5.00/5.50-16 TR15

PRESSURE											
psi	**26**	**29**	**32**	**35**	**38**	**41**	**43**	**46**	**49**	**54**	**67**
bar	**1,8**	**2,0**	**2,2**	**2,4**	**2,6**	**2,8**	**3,0**	**3,2**	**3,4**	**3,7**	**4,6**
MAX. LOAD kg											
25	400	425	450	475	495	520	540	560	580	610	
30	350	370	390	410	430	450	470	485	505	**530**	
35	315	335	350	370	390	405	420	440	455	475	
40	280	295	315	330	345	360	375	390	405	425	
F											790
Loader											1055

SIZE	Tread pattern	SW mm	OD mm	SLR mm	RC mm	Rims	Tube
6.00-16 8 PR (94A6)	**TD27**	172	738	349	2256	**4.50E** - 4.00E - 4.25KA - 4.5K	6.00-16 TR15

PRESSURE																
psi	**26**	**29**	**32**	**35**	**38**	**41**	**43**	**46**	**49**	**52**	**55**	**58**	**61**	**64**	**65**	**81**
bar	**1,8**	**2,0**	**2,2**	**2,4**	**2,6**	**2,8**	**3,0**	**3,2**	**3,4**	**3,6**	**3,8**	**4,0**	**4,2**	**4,4**	**4,5**	**5,6**
MAX. LOAD kg																
25	450	480	505	535	560	585	610	630	655	675	700	720	740	760	770	
30	390	415	440	465	485	510	530	550	570	590	605	625	645	660	**670**	
35	355	375	395	420	435	455	475	495	510	530	545	565	580	595	605	
40	315	335	355	370	390	405	425	440	455	470	485	500	515	530	535	
F																1000
Loader																1335

SIZE	Tread pattern	SW mm	OD mm	SLR mm	RC mm	Rims	Tube
6.50-16 8 PR (98A6)	**TD27**	180	759	353	2290	**4.50E** - 4.00E - 4.5K - 4.25KA - 5K	6.50/7.00-16 TR15

PRESSURE															
psi	**26**	**29**	**32**	**35**	**38**	**41**	**43**	**46**	**49**	**52**	**55**	**58**	**61**	**75**	
bar	**1,8**	**2,0**	**2,2**	**2,4**	**2,6**	**2,8**	**3,0**	**3,2**	**3,4**	**3,6**	**3,8**	**4,0**	**4,2**	**5,2**	
MAX. LOAD kg															
25	525	560	590	620	650	680	710	735	760	790	815	840	865		
30	455	485	515	540	565	590	615	640	665	685	705	730	**750**		
35	410	435	465	485	510	535	555	575	595	615	635	655	675		
40	365	390	410	435	455	475	495	510	530	550	565	585	600		
F															1120
Loader															1490

SIZE	Tread pattern	SW mm	OD mm	SLR mm	RC mm	Rims	Tube
7.50-16 8 PR (103A6)	**TD27**	218	803	372	2432	**5.50F** - 5K - 5.00F - 6.00F - 6LB	6.50/7.00-16 TR15

PRESSURE													
psi	**26**	**29**	**32**	**35**	**38**	**41**	**43**	**46**	**49**	**52**	**54**	**67**
bar	**1,8**	**2,0**	**2,2**	**2,4**	**2,6**	**2,8**	**3,0**	**3,2**	**3,4**	**3,6**	**3,7**	**4,6**
MAX. LOAD kg												
25	660	705	745	780	820	855	890	925	960	990	1005	
30	575	610	645	680	710	745	775	805	835	860	**875**	
35	515	550	580	610	640	670	695	725	750	775	790	
40	460	490	515	545	570	595	620	645	665	690	700	
F												1310
Loader												1745

SIZE	Tread pattern	SW mm	OD mm	SLR mm	RC mm	Rims	Tube
7.50-16 10 PR (109A6)	**TD27**	218	803	374	2436	**5.50F** - 5K - 5.00F - 6.00F - 6LB	6.50/7.00-16 TR15

PRESSURE																	
psi	**26**	**29**	**32**	**35**	**38**	**41**	**43**	**46**	**49**	**52**	**55**	**58**	**61**	**64**	**67**	**68**	**84**
bar	**1,8**	**2,0**	**2,2**	**2,4**	**2,6**	**2,8**	**3,0**	**3,2**	**3,4**	**3,6**	**3,8**	**4,0**	**4,2**	**4,4**	**4,6**	**4,7**	**5,8**
MAX. LOAD kg																	
25	675	720	760	800	835	875	910	945	980	1015	1045	1080	1110	1140	1170	1185	
30	585	625	660	695	730	760	760	825	850	880	910	935	965	990	1015	**1030**	
35	530	565	595	625	655	685	715	740	765	795	820	845	870	890	915	925	
40	470	500	530	555	580	610	635	660	680	705	730	750	770	795	815	825	
F																	1535
Loader																	2045

For technical notes about pressure tables please refer to page 244.

TD300

The TD300 is suitable for all types of terrain, due to the strength of its carcass and the high resistance of its tread, which also provides a high level of straight line stability during ploughing, thus allowing high working speeds.

SIZE		
9.5L-15	8 PR	(102A8)
7.50-16	8 PR	(103A6)
9.00-16	8 PR	(111A6)

SIZE		
10.00-16	10 PR	(119A8)
7.50-18	8 PR	(106A6)
7.50-18	10 PR	(113A6)

SIZE	Tread pattern	SW mm	OD mm	SLR mm	RC mm	Rims	Tube
9.5L-15 8 PR (102A8)	TD300	248	780		2350	8LB	

PRESSURE										
psi	26	29	32	35	38	41	44	48	60	64
bar	1,8	2,0	2,2	2,4	2,6	2,8	3,0	3,3	4,1	4,4
MAX. LOAD kg										
20	825	885	930	980	1030	1070	1120	1180		
30	660	705	745	785	820	855	895	945		
40	595	635	670	705	740	770	805	**850**		
45	555	590	625	655	690	715	750	790		
F										1415
Loader									1695	

SIZE	Tread pattern	SW mm	OD mm	SLR mm	RC mm	Rims	Tube
7.50-16 8 PR (103A6)	**TD300**	206	796	375	2446	**5.50F** - 5K - 5.00F - 6.00F - 6LB	8.25-16 V3-02-08 TR76

PRESSURE												
psi	**26**	**29**	**32**	**35**	**38**	**41**	**43**	**46**	**49**	**52**	**54**	**67**
bar	**1,8**	**2,0**	**2,2**	**2,4**	**2,6**	**2,8**	**3,0**	**3,2**	**3,4**	**3,6**	**3,7**	**4,6**
MAX. LOAD kg												
25	660	705	745	780	820	855	890	925	960	990	1005	
30	575	610	645	680	710	745	775	805	835	860	**875**	
35	515	550	580	610	640	670	695	725	750	775	790	
40	460	490	515	545	570	595	620	645	665	690	700	
F												1310
Loader												1745

SIZE	Tread pattern	SW mm	OD mm	SLR mm	RC mm	Rims	Tube
9.00-16 8 PR (111A6)	**TD300**	254	850	400	2628	**6.00F** - 6LB - W7 - W8	9.00-16 TR15

PRESSURE									
psi	**26**	**29**	**32**	**35**	**38**	**41**	**43**	**45**	**55**
bar	**1,8**	**2,0**	**2,2**	**2,4**	**2,6**	**2,8**	**3,0**	**3,1**	**3,8**
MAX. LOAD kg									
25	905	960	1015	1070	1120	1170	1220	1240	
30	785	835	885	930	975	1020	1060	**1090**	
35	705	750	795	835	875	915	955	970	
40	630	670	705	745	780	815	845	865	
F									1600
Loader									2135

According to availability

SIZE	Tread pattern	SW mm	OD mm	SLR mm	RC mm	Rims	Tube
10.00-16 10 PR (119A8)	**TD300**	280	886			**W8**	

PRESSURE											
psi	**26**	**29**	**32**	**35**	**38**	**41**	**44**	**46**	**49**	**61**	**65**
bar	**1,8**	**2,0**	**2,2**	**2,4**	**2,6**	**2,8**	**3,0**	**3,2**	**3,4**	**4,2**	**4,5**
MAX. LOAD kg											
20	1300	1385	1465	1545	1610	1690	1760	1830	1890		
30	1040	1105	1170	1230	1290	1350	1405	1460	1510		
40	935	995	1055	1110	1160	1215	1265	1315	**1360**		
45	870	925	980	1030	1080	1130	1175	1225	1265		
F											2255
Loader										2700	

SIZE	Tread pattern	SW mm	OD mm	SLR mm	RC mm	Rims	Tube
7.50-18 8 PR (106A6)	**TD300**	207	854	403	2625	**5.50F** - 5.00F - 6.00F	7.50-18 TR15

PRESSURE													
psi	**26**	**29**	**32**	**35**	**38**	**41**	**43**	**46**	**49**	**52**	**54**	**67**
bar	**1,8**	**2,0**	**2,2**	**2,4**	**2,6**	**2,8**	**3,0**	**3,2**	**3,4**	**3,6**	**3,7**	**4,6**
MAX. LOAD kg												
25	715	760	805	850	890	930	965	1005	1040	1075	1095	
30	625	665	700	735	775	805	840	875	905	935	**950**	
35	560	595	630	665	695	725	755	785	815	840	855	
40	500	530	560	590	620	645	670	700	725	750	760	
F												1420
Loader												1895

SIZE	Tread pattern	SW mm	OD mm	SLR mm	RC mm	Rims	Tube
7.50-18 10 PR (113A6)	**TD300**	207	854	399	2594	**5.50F** - 5.00F - 6.00F	7.50-18 TR15

PRESSURE																	
psi	**26**	**29**	**32**	**35**	**38**	**41**	**44**	**46**	**49**	**52**	**55**	**58**	**61**	**64**	**67**	**70**	**87**
bar	**1,8**	**2,0**	**2,2**	**2,4**	**2,6**	**2,8**	**3,0**	**3,2**	**3,4**	**3,6**	**3,8**	**4,0**	**4,2**	**4,4**	**4,6**	**4,8**	**6,0**
MAX. LOAD kg																	
25	745	790	840	880	925	965	1005	1045	1080	1120	1155	1190	1225	1255	1290	1325	
30	650	690	730	765	805	840	875	905	940	970	1005	1035	1065	1095	1120	**1150**	
35	585	620	655	690	725	755	785	815	845	875	905	930	960	985	1010	1035	
40	520	550	585	615	640	670	700	725	750	780	800	825	850	875	900	920	
F																	1725
Loader																	2300

According to availability

For technical notes about pressure tables please refer to page 244.

T414

The Twin Tractor tires offer an increased output from tractors and other pulling machines, using the horse powers in a very efficient way.
T414 has a traction pattern with deep effective lugs in three different angles for maximum traction and excellent self cleaning.

SIZE	New tire		Tire in service		SLR	RC	SRI	Rim	Type	Speed	PRESSURE
	SW mm	OD mm	SW mm	OD mm	mm	mm				Km/h	psi / bar / MAX. LOAD kg
400/55-17.5 125A8 (122B) **T414**	400	880	422	906	408	2640	415	AG11.75	TL	50	
										40	
										25	
										10HT/30	
										10 LT	
										10 C	

SIZE	New tire		Tire in service		SLR	RC	SRI	Rim	Type	Speed	PRESSURE
	SW mm	OD mm	SW mm	OD mm	mm	mm				Km/h	psi / bar / MAX. LOAD kg
600/55-26.5 148A8 (145B) **T414**	600	1350	648	1379	620	4050	625	AG20.00	TL	50	
										40	
										25	
										10HT/30	
										10 LT	
										10 C	

According to availability

SIZE	New tire		Tire in service		SLR	RC	SRI	Rim	Type	Speed	PRESSURE
	SW mm	OD mm	SW mm	OD mm	mm	mm				Km/h	psi / bar / MAX. LOAD kg
600/55-30.5 150A8 (147B) **T414**	600	1435	648	1475	670	4330	675	AG20.00	TL	50	
										40	
										25	
										10HT/30	
										10 LT	
										10 C	

SIZE	New tire		Tire in service		SLR	RC	SRI	Rim	Type	Speed	PRESSURE
	SW mm	OD mm	SW mm	OD mm	mm	mm				Km/h	psi / bar / MAX. LOAD kg
600/60-30.5 153A8 (150B) **T414**	600	1510	638	1545	700	4485	700	AG20.00	TL	50	
										40	
										25	
										10HT/30	
										10 LT	
										10 C	

SIZE	
400/55-17.5	125A8 (122B)
600/55-26.5	148A8 (145B)
600/55-30.5	150A8 (147B)
600/60-30.5	153A8 (150B)
800/55-30.5	172A8 (168B)

SIZE	
710/65-38	162A8 (158B)
850/50-38	163A8 (160B)
850/60-38	175A8 (172B)
850/55-42	161A8 (157B)

7	12	14	17	20	22	23	26	29	32	35	38	41	43	45	46	49	52	55	58
0,5	0,8	1,0	1,2	1,4	1,5	1,6	1,8	2,0	2,2	2,4	2,6	2,8	3,0	3,1	3,2	3,4	3,6	3,8	4,0
575	730	830	925	1025	1070	1120	1215	1310	1405	1500									
630	800	915	1030	1140	1195	1250	1355	1455	1555	**1650**									
695	890	1015	1145	1265	1325	1390	1500	1615	1725	1830									
670	855	980	1100	1220	1280	1340	1450	1555	1660	1765									
855	1060	1200	1340	1475	1545	1610	1745	1875	1995	2125	2240	2365	2475						
955	1180	1330	1480	1630	1705	1780	1925	2070	2205	2335	2470	2595	2730						

7	12	14	17	20	22	23	26	29	32	35	38	41	43	45	46	49	52	55	58
0,5	0,8	1,0	1,2	1,4	1,5	1,6	1,8	2,0	2,2	2,4	2,6	2,8	3,0	3,1	3,2	3,4	3,6	3,8	4,0
1255	1600	1780	1950	2190	2310	2430	2570	2695	2805	2900									
1375	1750	1970	2180	2415	2535	2650	2800	2930	3050	**3150**									
1525	1945	2185	2420	2680	2810	2940	3105	3255	3385	3495									
1470	1875	2105	2335	2585	2710	2835	2995	3135	3260	3370									
1875	2325	2625	2880	3150	3270	3410	3695	3975	4125	4335	4455	4640	4725						
2095	2580	2910	3210	3480	3610	3770	4075	4385	4620	4770	4985	5095	5285						

7	12	14	17	20	22	23	26	29	32	35	38	41	43	45	46	49	52	55	58
0,5	0,8	1,0	1,2	1,4	1,5	1,6	1,8	2,0	2,2	2,4	2,6	2,8	3,0	3,1	3,2	3,4	3,6	3,8	4,0
1335	1700	1915	2120	2350	2460	2575	2720	2855	2970	3075									
1455	1850	2080	2300	2550	2675	2800	2960	3105	3235	**3350**									
1615	2055	2310	2555	2830	2970	3110	3285	3450	3590	3720									
1555	1980	2225	2460	2730	2860	2995	3170	3325	3465	3585									
1985	2460	2775	3040	3325	3450	3600	3900	4200	4365	4590	4725	4925	5025						
2210	2730	3075	3395	3675	3810	3975	4305	4630	4885	5050	5280	5410	5615						

7	12	14	17	20	22	23	26	29	32	35	38	41	43	45	46	49	52	55	58
0,5	0,8	1,0	1,2	1,4	1,5	1,6	1,8	2,0	2,2	2,4	2,6	2,8	3,0	3,1	3,2	3,4	3,6	3,8	4,0
1415	1800	2050	2300	2550	2675	2800	2960	3105	3235	3350									
1570	2000	2255	2500	2785	2930	3075	3245	3400	3535	**3650**									
1745	2220	2500	2775	3090	3250	3415	3605	3775	3925	4050									
1680	2140	2410	2675	2980	3135	3290	3475	3635	3780	3905									
2145	2660	3000	3295	3610	3750	3925	4265	4615	4785	5025	5165	5375	5475						
2390	2955	3325	3675	3990	4140	4325	4700	5075	5360	5530	5780	5910	6125						

SIZE	New tire		Tire in service		SLR	RC	SRI	Rim	Type	Speed	PRESSURE
	SW mm	OD mm	SW mm	OD mm	mm	mm				Km/h	psi / bar / MAX. LOAD kg
800/55-30.5 172A8 (168B) **T414**	820	1650	862	1716	760	4900	770	AG28.00	TL	50	
										40	
										25	
										10HT/30	
										10 LT	
										10 C	

SIZE	New tire		Tire in service		SLR	RC	SRI	Rim	Type	Speed	PRESSURE
	SW mm	OD mm	SW mm	OD mm	mm	mm				Km/h	psi / bar / MAX. LOAD kg
710/65-38 162A8 (158B) **T414**	710	1860	774	1953	870	5626	885	DW24B	TL	50	
										40	
										25	
										10HT/30	
										10 LT	
										10 C	

SIZE	New tire		Tire in service		SLR	RC	SRI	Rim	Type	Speed	PRESSURE
	SW mm	OD mm	SW mm	OD mm	mm	mm				Km/h	psi / bar / MAX. LOAD kg
850/50-38 163A8 (160B) **T414**	850	1860	921	1875	850	5580	855	DW28B	TL	50	
										40	
										25	
										10HT/30	
										10 LT	
										10 C	

SIZE	New tire		Tire in service		SLR	RC	SRI	Rim	Type	Speed	PRESSURE
	SW mm	OD mm	SW mm	OD mm	mm	mm				Km/h	psi / bar / MAX. LOAD kg
850/60-38 175A8 (172B) **T414**	850	1980	921	2057	910	5880	930	DW28B	TL	50	
										40	
										25	
										10HT/30	
										10 LT	
										10 C	

SIZE	New tire		Tire in service		SLR	RC	SRI	Rim	Type	Speed	PRESSURE
	SW mm	OD mm	SW mm	OD mm	mm	mm				Km/h	psi / bar / MAX. LOAD kg
850/55-42 161A8 (157B) **T414**	850	1990	921	2067	900	5880	925	DW28B	TL	50	
										40	
										25	
										10HT/30	
										10 LT	

7	12	14	17	20	22	23	26	29	32	35	38	41	43	45	46	49	52	55	58
0,5	0,8	1,0	1,2	1,4	1,5	1,6	1,8	2,0	2,2	2,4	2,6	2,8	3,0	3,1	3,2	3,4	3,6	3,8	4,0
2085	2650	2960	3250	3625	3810	4000	4250	4475	4685	4875	5080	5270	5440	5525	5600				
2280	2900	3280	3650	4015	4195	4375	4640	4880	5100	5300	5565	5820	6065	6185	**6300**				
2530	3220	3640	4050	4460	4660	4855	5150	5420	5665	5885	6180	6460	6735	6865	6995				
2440	3105	3510	3905	4295	4490	4680	4965	5225	5460	5670	5955	6230	6490	6620	6740				
3110	3855	4350	4795	5260	5475	5690	6145	6565	6845	7205	7435	7765	7950	8100	8245	8595	8870	9200	9450
3470	4280	4825	5335	5810	6045	6310	6775	7265	7640	7925	8300	8530	8870	8965	9125	9510	9805	10175	10450

7	12	14	17	20	22	23	26	29	32	35	38	41	43	45	46	49	52	55	58
0,5	0,8	1,0	1,2	1,4	1,5	1,6	1,8	2,0	2,2	2,4	2,6	2,8	3,0	3,1	3,2	3,4	3,6	3,8	4,0
2280	2900	3235	3550	3905	4080	4250													
2475	3150	3580	4000	4380	4565	**4750**													
2745	3495	3970	4440	4865	5070	5275													
2650	3370	3830	4280	4690	4885	5085													
3375	4185	4725	5230	5750	6000	6220	6705	7125											
3765	4650	5240	5810	6355	6625	6915	7390	7905											

7	12	14	17	20	22	23	26	29	32	35	38	41	43	45	46	49	52	55	58
0,5	0,8	1,0	1,2	1,4	1,5	1,6	1,8	2,0	2,2	2,4	2,6	2,8	3,0	3,1	3,2	3,4	3,6	3,8	4,0
2280	2900	3280	3650	4075	4285	4500													
2555	3250	3635	4000	4440	4655	**4875**													
2835	3610	4035	4440	4925	5170	5410													
2730	3480	3890	4280	4750	4980	5215													
3480	4315	4875	5315	5800	6000	6265	6790	7315											
3885	4795	5405	5945	6405	6625	6915	7485	8060											

7	12	14	17	20	22	23	26	29	32	35	38	41	43	45	46	49	52	55	58
0,5	0,8	1,0	1,2	1,4	1,5	1,6	1,8	2,0	2,2	2,4	2,6	2,8	3,0	3,1	3,2	3,4	3,6	3,8	4,0
2710	3450	3860	4250	4770	5035	5300	5595	5860	6095	6300									
2945	3750	4255	4750	5275	5535	5800	6125	6415	6675	**6900**									
3270	4165	4720	5275	5855	6145	6440	6800	7125	7410	7660									
3155	4015	4550	5085	5645	5925	6205	6555	6865	7140	7385									
4020	4985	5625	6220	6835	7125	7440	8070	8700	9035	9490	9755	10155	10350						
4485	5535	6235	6910	7550	7870	8215	8900	9585	10110	10440	10910	11160	11575						

7	12	14	17	20	22	23	26	29	32	35	38	41	43	45	46	49	52	55	58
0,5	0,8	1,0	1,2	1,4	1,5	1,6	1,8	2,0	2,2	2,4	2,6	2,8	3,0	3,1	3,2	3,4	3,6	3,8	4,0
2630	3350	3745	4125																
2870	3650	4140	**4625**																
3185	4050	4595	5135																
3070	3905	4430	4950																
3910	4850	5475	6055	6655	6940														

For technical notes about pressure tables please refer to page 244.

TWIN RADIAL

The Trelleborg radial implement tire, perfect in all working conditions and on any type of soil.
Product Plus:
- Excellent ground care due to the wide area of footprint and the rounded profile of the shoulder. The central “block structure” enables the tire to self-clean efficiently and rapidly
- High speed and maximised road handling even in high stress conditions
- High load capacity and excellent traction when used as a drive wheel and at the same time offering minimum rolling resistance when in free-rolling mode
- Great comfort and excellent even wear due to the sidewall profile and tread design.

SIZE	
500/60R22.5	155D
560/60R22.5	161D
580/65R22.5	159D
600/50R22.5	159D
600/55R26.5	165D
680/55R26.5	171D

SIZE	
710/50R26.5	170D
650/65R30.5	176D
750/60R30.5	181D
850/50R30.5	182D
NEW 800/60R32	185D

SIZE	Tread pattern	SW mm	OD mm	SLR mm	RC mm	SRI	Rim	Permitted Rims	Type	Tube
500/60R22.5 155D	**Twin Radial**	520	1192	537	3600	550	AG16.00	15.00 - 16.00 - 17.00	TUBELESS	

PRESSURE										
psi	**14**	**17**	**22**	**26**	**29**	**35**	**41**	**46**	**52**	**58**
bar	**1,0**	**1,2**	**1,5**	**1,8**	**2,0**	**2,4**	**2,8**	**3,2**	**3,6**	**4,0**
MAX. LOAD kg										
65 S	1730	1930	2235	2535	2735	3140	3325	3510	3695	**3880**
50 S	2070	2315	2690	3060	3305	3800	4020	4245	4470	4690
40 S	2330	2605	3025	3440	3715	4270	4520	4770	5020	5270
25 S	2680	3005	3495	3985	4310	4960	5250	5540	5830	6120
10 S	3160	3515	4050	4585	4940	5650	5980	6315	6650	6980

SIZE	Tread pattern	SW mm	OD mm	SLR mm	RC mm	SRI	Rim	Permitted Rims	Type	Tube
560/60R22.5 161D	**Twin Radial**	552	1240	559	3824	600	AG16.00	16.00 - 17.00	TUBELESS	

PRESSURE										
psi	**14**	**17**	**22**	**26**	**29**	**35**	**41**	**46**	**52**	**58**
bar	**1,0**	**1,2**	**1,5**	**1,8**	**2,0**	**2,4**	**2,8**	**3,2**	**3,6**	**4,0**
MAX. LOAD kg										
65 S	2070	2310	2670	3030	3270	3750	3970	4190	4410	**4630**
50 S	2470	2765	3205	3645	3940	4530	4800	5065	5330	5600
40 S	2790	3120	3610	4105	4435	5090	5390	5690	5990	6290
25 S	3190	3580	4160	4745	5135	5910	6260	6610	6960	7310
10 S	3780	4205	4840	5475	5900	6750	7145	7540	7935	8330

SIZE	Tread pattern	SW mm	OD mm	SLR mm	RC mm	SRI	Rim	Permitted Rims	Type	Tube
580/65R22.5 159D	**Twin Radial**	583	1300	586	3950	625	AG16.00	16.00 - 17.00 - AG20.00	TUBELESS	

PRESSURE										
psi	**12**	**14**	**20**	**23**	**26**	**29**	**35**	**41**	**43**	**46**
bar	**0,8**	**1,0**	**1,4**	**1,6**	**1,8**	**2,0**	**2,4**	**2,8**	**3,0**	**3,2(*)**
MAX. LOAD kg										
65 S	1875	2105	2575	2810	2990	3170	3625	4075	4225	**4375**
50 S	2265	2550	3115	3400	3615	3835	4385	4930	5115	5295
40 S	2545	2865	3500	3820	4065	4310	4925	5540	5745	5950
30 S	2825	3180	3885	4240	4515	4785	5470	6155	6380	6610
10 S	3370	3790	4630	5055	5380	5705	6520	7335	7605	7875

(*) = The inflation pressure can be increased up to 4,0 bar.

SIZE	Tread pattern	SW mm	OD mm	SLR mm	RC mm	SRI	Rim	Permitted Rims	Type	Tube
600/50R22.5 159D	**Twin Radial**	600	1170	530	3550	550	AG20.00		TUBELESS	

PRESSURE										
psi	**14**	**17**	**22**	**26**	**29**	**35**	**41**	**46**	**52**	**58**
bar	**1,0**	**1,2**	**1,5**	**1,8**	**2,0**	**2,4**	**2,8**	**3,2**	**3,6**	**4,0**
MAX. LOAD kg										
65 S	1950	2175	2520	2860	3085	3540	3750	3960	4170	**4380**
50 S	2340	2620	3035	3455	3735	4290	4540	4790	5040	5290
40 S	2640	2950	3420	3885	4195	4820	5100	5385	5670	5950
25 S	3020	3385	3940	4490	4855	5590	5920	6250	6580	6910
10 S	3570	3970	4575	5175	5575	6380	6755	7130	7505	7880

SIZE	Tread pattern	SW mm	OD mm	SLR mm	RC mm	SRI	Rim	Permitted Rims	Type	Tube
600/55R26.5 165D	**Twin Radial**	636	1341	605	4110	625	AG20.00		TUBELESS	

PRESSURE										
psi	**14**	**17**	**22**	**26**	**29**	**35**	**41**	**46**	**52**	**58**
bar	**1,0**	**1,2**	**1,5**	**1,8**	**2,0**	**2,4**	**2,8**	**3,2**	**3,6**	**4,0**
MAX. LOAD kg										
65 S	2300	2565	2970	3370	3635	4170	4415	4660	4905	**5150**
50 S	2750	3080	3570	4065	4395	5050	5345	5640	5935	6230
40 S	3100	3465	4020	4570	4935	5670	6000	6335	6670	7000
25 S	3560	3995	4640	5290	5725	6590	6980	7365	7750	8140
10 S	4200	4675	5380	6090	6565	7510	7950	8390	8830	9270

SIZE	Tread pattern	SW mm	OD mm	SLR mm	RC mm	SRI	Rim	Permitted Rims	Type	Tube
680/55R26.5 171D	**Twin Radial**	685	1420	631	4335	675	AG20.00	AG24.00	TUBELESS	

PRESSURE										
psi	**12**	**14**	**20**	**23**	**29**	**38**	**43**	**46**	**52**	**58**
bar	**0,8**	**1,0**	**1,4**	**1,6**	**2,0**	**2,6**	**3,0**	**3,2**	**3,6**	**4,0**
MAX. LOAD kg										
65 S	1970	2245	2830	3140	3570	4510	4890	5105	5600	**6150**
50 S	2385	2720	3425	3800	4320	5455	5920	6180	6775	7445
40 S	2680	3055	3850	4270	4855	6130	6650	6945	7615	8365
30 S	2975	3390	4275	4740	5390	6805	7385	7710	8455	9290
10 S	3545	4045	5095	5650	6425	8115	8805	9190	10075	11070

SIZE	Tread pattern	SW mm	OD mm	SLR mm	RC mm	SRI	Rim	Permitted Rims	Type	Tube
710/50R26.5 170D	**Twin Radial**	710	1355	610	4120	650	AG24.00		TUBELESS	

PRESSURE										
psi	**14**	**17**	**22**	**26**	**29**	**35**	**41**	**46**	**52**	**58**
bar	**1,0**	**1,2**	**1,5**	**1,8**	**2,0**	**2,4**	**2,8**	**3,2**	**3,6**	**4,0**
MAX. LOAD kg										
65 S	2680	2990	3460	3925	4235	4860	5145	5430	5715	**6000**
50 S	3200	3585	4155	4730	5115	5880	6225	6570	6915	7260
40 S	3610	4040	4680	5325	5755	6610	7000	7385	7770	8160
25 S	4140	4645	5400	6155	6660	7670	8120	8575	9030	9480
10 S	4900	5450	6275	7100	7650	8750	9260	9775	10290	10800

SIZE	Tread pattern	SW mm	OD mm	SLR mm	RC mm	SRI	Rim	Permitted Rims	Type	Tube
650/65R30.5 176D	**Twin Radial**	675	1635	735	4975	775	AG20.00		TUBELESS	

PRESSURE										
psi	**14**	**17**	**22**	**26**	**29**	**35**	**41**	**46**	**52**	**58**
bar	**1,0**	**1,2**	**1,5**	**1,8**	**2,0**	**2,4**	**2,8**	**3,2**	**3,6**	**4,0**
MAX. LOAD kg										
65 S	3170	3540	4090	4645	5015	5750	6090	6425	6760	**7100**
50 S	3790	4245	4920	5600	6055	6960	7370	7775	8180	8590
40 S	4280	4785	5545	6305	6810	7820	8280	8740	9200	9660
25 S	4900	5495	6395	7290	7885	9080	9615	10150	10685	11220
10 S	5800	6450	7430	8405	9055	10360	10965	11570	12175	12780

SIZE	Tread pattern	SW mm	OD mm	SLR mm	RC mm	SRI	Rim	Permitted Rims	Type	Tube
750/60R30.5 181D	**Twin Radial**	790	1678	756	5130	800	AG24.00		TUBELESS	

PRESSURE										
psi	**14**	**17**	**22**	**26**	**29**	**35**	**41**	**46**	**52**	**58**
bar	**1,0**	**1,2**	**1,5**	**1,8**	**2,0**	**2,4**	**2,8**	**3,2**	**3,6**	**4,0**
MAX. LOAD kg										
65 S	3680	4110	4750	5395	5825	6680	7070	7465	7860	**8250**
50 S	4410	4935	5720	6505	7030	8080	8555	9030	9505	9980
40 S	4970	5560	6440	7325	7915	9090	9620	10155	10690	11220
25 S	5700	6395	7430	8470	9165	10550	11170	11795	12420	13040
10 S	6730	7490	8625	9765	10525	12040	12740	13445	14150	14850

SIZE	Tread pattern	SW mm	OD mm	SLR mm	RC mm	SRI	Rim	Permitted Rims	Type	Tube
850/50R30.5 182D	**Twin Radial**	875	1630	735	4946	775	AG28.00		TUBELESS	

PRESSURE										
psi	**14**	**17**	**22**	**26**	**29**	**35**	**41**	**46**	**52**	**58**
bar	**1,0**	**1,2**	**1,5**	**1,8**	**2,0**	**2,4**	**2,8**	**3,2**	**3,6**	**4,0**
MAX. LOAD kg										
65 S	3400	3820	4450	5080	5500	6340	6880	7420	7960	**8500**
50 S	4110	4620	5380	6145	6655	7670	8325	8980	9635	10290
40 S	4620	5190	6050	6905	7475	8620	9355	10090	10825	11560
25 S	5370	6035	7025	8020	8685	10010	10865	11720	12575	13430
10 S	6430	7145	8210	9280	9995	11420	12390	13360	14330	15300

SIZE	Tread pattern	SW mm	OD mm	SLR mm	RC mm	SRI	Rim	Permitted Rims	Type	Tube
800/60R32 185D	**Twin Radial**	800	1805	810	5440	875	DW27B		TUBELESS	

PRESSURE										
psi	**14**	**17**	**22**	**26**	**29**	**35**	**41**	**46**	**52**	**58**
bar	**1,0**	**1,2**	**1,5**	**1,8**	**2,0**	**2,4**	**2,8**	**3,2**	**3,6**	**4,0**
MAX. LOAD kg										
65 S	3700	4165	4720	5275	5550	6385	7215	7680	8510	**9250**
50 S	4480	5040	5710	6380	6720	7725	8735	9290	10300	11195
40 S	5035	5665	6415	7175	7550	8685	9815	10445	11575	12580
25 S	5850	6580	7455	8335	8770	10085	11400	12135	13450	14615
10 S	6660	7495	8490	9495	9990	11490	12990	13820	15320	16650

For technical notes about pressure tables please refer to page 244.

IM110

Suitable for use on medium-low powered farm machinery, the lug shape and groove base of the IM110, with its inter-lug terraces and veining, gives excellent traction.

IM220

The differentiated rigidity of the whole tire section also enables it to keep itself clean, thus further improving traction.

SIZE	LI/SS	New tire		Tire in service		SLR	RC	Rim	Permitted rims	Tube	Speed	PRESSURE
		SW mm +/- 1,5%	OD mm +/- 1,5%	SW max mm	OD max mm	mm +/- 2%	mm +/- 2,5%				Km/h	psi / bar / MAX. LOAD kg
5.0-10 4PR IM110	74A8	135	515	152	525	236	1566	4J	3.50B	4.00/4.10 /4.40 /5.00-10 TR13	Free Rolling	
											50	
											40	
											10	
	62A8										Driving wheel	
											50	
											40	
											25	
											10	
											10 C	

SIZE	LI/SS	New tire		Tire in service		SLR	RC	Rim	Permitted rims	Tube	Speed	PRESSURE
		SW mm +/- 1,5%	OD mm +/- 1,5%	SW max mm	OD max mm	mm +/- 2%	mm +/- 2,5%				Km/h	psi / bar / MAX. LOAD kg
4.00-12 2PR IM110	54A8	115	535	120	537	247	1605	3.00B	3.00D-3.50B 2.50CSC	4.00-12 TR13	Free Rolling	
											50	
											40	
											10	
	42A8										Driving wheel	
											50	
											40	
											25	
											10	
											10 C	

SIZE		IM110
5.0-10	4 PR	(74A8)
4.00-12	2 PR	(54A8)
5.00-12	4 PR	(74A8)
6.5/80-12	4 PR	(84A8)
7.00-12	6 PR	(95A8)
10.0/80-12	6 PR	(110A8)
5.00-14	4 PR	(73A8)
5.00-15	6 PR	(88A8)
6.5/80-15	4 PR	(90A8)
7.5L-15	8 PR	(113A8)
10.0/75-15.3	8 PR	(119A8)
10.0/75-15.3	10 PR	(123A8)
6.00-16	8 PR	(103A8)
6.50-16	8 PR	(105A8)

SIZE		IM110
7.50-16	8 PR	(112A8)
7.50-16 TL	8 PR	(112A8)
8.25-16	8 PR	(116A8)
9.0/75-16	6 PR	(111A8)
250/80-16	8 PR	(125A8)
7.50-18	6 PR	(106A8)
250/80-18	8 PR	(127A8)
4.50-19	2 PR	(66A8)
4.00-21	2 PR	(66A8)

SIZE		IM220
210/95-20 TL	119A8	

7	12	14	17	20	22	26	29	30	32	33	35	36	38	41	42
0,5	0,8	1,0	1,2	1,4	1,5	1,8	2,0	2,1	2,2	2,3	2,4	2,5	2,6	2,8	2,9
150	195	225	250	275	285	320	340								
165	220	250	280	305	315	355	**375**								
235	305	350	390	425	445	495	525								
105	140	160	175	195	200	225	240								
120	155	175	195	215	225	250	**265**								
140	185	210	235	255	265	295	315								
165	215	250	275	300	315	350	370								
190	245	275	310	340	355	395	420	435	440	455	465	475	490		

7	12	14	17	20	22	26	29	30	32	33	35	36	38	41	42
0,5	0,8	1,0	1,2	1,4	1,5	1,8	2,0	2,1	2,2	2,3	2,4	2,5	2,6	2,8	2,9
100	130	150	165	185	190										
110	145	165	185	205	**212**										
155	205	235	260	285	295										
70	95	105	120	130	135										
80	105	120	130	145	**150**										
95	125	140	155	170	180										
110	145	165	185	200	210										
125	165	190	205	230	235	260	275								

SIZE	LI/SS	New tire		Tire in service		SLR	RC	Rim	Permitted rims	Tube	Speed	PRESSURE
		SW mm +/- 1,5%	OD mm +/- 1,5%	SW max mm	OD max mm	mm +/- 2%	mm +/- 2,5%				Km/h	psi / bar / MAX. LOAD kg
5.00-12 4PR IM110	74A8	135	584	152	592	253	1705	3.00D	3.50D 4J 4.00E	6-12 TR13	Free Rolling	
											50	
											40	
											10	
	62A8										Driving wheel	
											50	
											40	
											25	
											10	
											10 C	

SIZE	LI/SS	New tire		Tire in service		SLR	RC	Rim	Permitted rims	Tube	Speed	PRESSURE
		SW mm +/- 1,5%	OD mm +/- 1,5%	SW max mm	OD max mm	mm +/- 2%	mm +/- 2,5%				Km/h	psi / bar / MAX. LOAD kg
6.5/80-12 4PR IM110	84A8	160	600	170	609	270	1786	5JA	5J	6-12 TR13	Free Rolling	
											50	
											40	
											10	
	72A8										Driving wheel	
											50	
											40	
											25	
											10	
											10 C	

SIZE	LI/SS	New tire		Tire in service		SLR	RC	Rim	Permitted rims	Tube	Speed	PRESSURE
		SW mm +/- 1,5%	OD mm +/- 1,5%	SW max mm	OD max mm	mm +/- 2%	mm +/- 2,5%				Km/h	psi / bar / MAX. LOAD kg
7.00-12 6PR IM110	95A8	192	680	196	690	308	2029	5JA	4.50E-5.00F 5.00B-5.50F	7.00-12 TR15	Free Rolling	
											50	
											40	
											10	
	83A8										Driving wheel	
											50	
											40	
											25	
											10	
											10 C	

SIZE	LI/SS	New tire		SLR	RC	Rim	Permitted rims	Tube	Speed	PRESSURE
		SW mm +/- 1,5%	OD mm +/- 1,5%	mm +/- 2%	mm +/- 2,5%				Km/h	psi / bar / MAX. LOAD kg
10.0/80-12 6PR IM110	110A8	250	753	321	2187	7.00	9.00	8.50-12/ /10.0 /80-12 TR15	Free Rolling	
									50	
									40	
									10	
	98A8								Driving wheel	
									50	
									40	
									25	
									10	
									10 C	

7	12	14	17	20	22	26	29	30	32	33	35	36	38	39	41	42	43	46	51
0,5	0,8	1,0	1,2	1,4	1,5	1,8	2,0	2,1	2,2	2,3	2,4	2,5	2,6	2,7	2,8	2,9	3,0	3,2	3,5
125	165	190	210	230	240	265	285	290	300	305	315	320	330	340					
140	185	210	235	255	265	295	315	325	335	340	350	360	365	**375**					
195	260	295	325	355	370	415	440	455	465	475	490	500	515	525					
90	115	135	150	160	170	190	200	205	210	215	220	230	235	240					
100	130	150	165	180	190	210	220	230	235	240	245	255	260	**265**					
120	155	175	195	215	225	250	265	275	280	285	295	300	310	315					
140	180	205	230	250	265	295	310	320	330	335	345	355	365	370					
160	205	235	260	285	300	330	345	365	370	380	385	400	410	420	425	435	440	465	490

7	12	14	17	20	22	26	29	30	32	33	35	36	38	39	41	42	43	45	46	51	54	58	62	67	70	71	75
0,5	0,8	1,0	1,2	1,4	1,5	1,8	2,0	2,1	2,2	2,3	2,4	2,5	2,6	2,7	2,8	2,9	3,0	3,1	3,2	3,5	3,7	4,0	4,3	4,6	4,8	5,0	5,2
180	235	270	300	330	340	380	405	415	430	440	450																
200	265	300	335	365	380	425	450	460	475	490	**500**																
280	370	420	465	510	530	590	630	645	665	685	700																
130	170	190	215	235	245	270	285	295	305	310	320																
140	185	215	235	260	270	300	320	330	335	345	**355**																
170	225	255	280	310	320	355	380	390	400	410	420																
200	260	300	330	365	380	420	445	460	470	485	495																
220	290	340	370	410	425	475	505	520	530	545	560	575	585	600	615	625	640	645									

7	12	14	17	20	22	26	29	30	32	33	35	36	38	39	41	42	43	46	48	51	54	58	62	67	70	71	75
0,5	0,8	1,0	1,2	1,4	1,5	1,8	2,0	2,1	2,2	2,3	2,4	2,5	2,6	2,7	2,8	2,9	3,0	3,2	3,3	3,5	3,7	4,0	4,3	4,6	4,8	5,0	5,2
240	320	365	405	445	460	510	545	560	575	590	605	620															
270	355	405	450	490	510	570	605	625	640	655	675	**690**															
375	495	565	630	690	715	795	850	870	895	920	945	965															
170	225	255	285	310	325	360	385	395	405	420	430	440															
190	250	285	315	345	360	400	425	440	450	465	475	**485**															
225	300	340	375	415	430	480	510	525	540	550	565	580															
265	350	400	445	485	505	565	600	615	635	650	665	680															
300	395	450	495	545	570	630	670	695	710	735	750	765	790	805	820	835	850	890	905								

7	12	14	17	20	22	26	29	30	32	33	35	36	38	39	41	42	43	45	46	51	54	58	62	67	70	72	75
0,5	0,8	1,0	1,2	1,4	1,5	1,8	2,0	2,1	2,2	2,3	2,4	2,5	2,6	2,7	2,8	2,9	3,0	3,1	3,2	3,5	3,7	4,0	4,3	4,6	4,8	5,0	5,2
390	515	585	650	715	745	825	880	905	930	955																	
435	570	650	725	795	825	920	975	1005	1035	**1060**																	
610	800	910	1015	1110	1155	1285	1370	1405	1445	1485																	
275	365	415	460	505	525	585	620	640	660	675																	
305	405	460	515	560	585	650	690	710	730	**750**																	
365	480	550	610	670	695	775	820	845	870	895																	
430	565	645	720	785	820	910	965	995	1025	1050																	
480	640	725	810	885	925	1025	1090	1120	1150	1185	1215	1240	1270	1300	1325	1355	1380										

SIZE	LI/SS	New tire		Tire in service		SLR	RC	Rim	Permitted rims	Tube	Speed	PRESSURE
		SW mm +/- 1,5%	OD mm +/- 1,5%	SW max mm	OD max mm	mm +/- 2%	mm +/- 2,5%				Km/h	psi / bar / MAX. LOAD kg
5.00-14 4PR IM110	73A8	130	636	152	644	292	1913	3.00D	3.50D-4.00E-4J	ER14 135 /145R14 TR13	Free Rolling	
											50	
											40	
											10	
	61A8										Driving wheel	
											50	
											40	
											25	
											10	
											10 C	

SIZE	LI/SS	New tire		Tire in service		SLR	RC	Rim	Permitted rims	Tube	Speed	PRESSURE
		SW mm +/- 1,5%	OD mm +/- 1,5%	SW max mm	OD max mm	mm +/- 2%	mm +/- 2,5%				Km/h	psi / bar / MAX. LOAD kg
5.00-15 6PR IM110	88A8	129	661	140	670	300	1985	3.00D	3.50D-4.00E 4J-4.5J	5.00-15 TR13	Free Rolling	
											50	
											40	
											10	
	75A8										Driving wheel	
											50	
											40	
											25	
											10	
											10 C	

SIZE	LI/SS	New tire		Tire in service		SLR	RC	Rim	Permitted rims	Tube	Speed	PRESSURE
		SW mm +/- 1,5%	OD mm +/- 1,5%	SW max mm	OD max mm	mm +/- 2%	mm +/- 2,5%				Km/h	psi / bar / MAX. LOAD kg
6.5/80-15 4PR IM110	90A8	165	685	171	695	313	2051	5J	4.5K-5K-5.5J	165-15 TR13	Free Rolling	
											50	
											40	
											10	
	78A8										Driving wheel	
											50	
											40	
											25	
											10	
											10 C	

SIZE	LI/SS	New tire		Tire in service		SLR	RC	Rim	Permitted rims	Tube	Speed	PRESSURE
		SW mm +/- 1,5%	OD mm +/- 1,5%	SW max mm	OD max mm	mm +/- 2%	mm +/- 2,5%				Km/h	psi / bar / MAX. LOAD kg
7.5L-15 8PR IM110	113A8	200	755	220	783	321	2196	6LB	5K-5.5J-5.5K	KR 15 195/ 205R15 TR13	Free Rolling	
											50	
											40	
											10	
	100A8										Driving wheel	
											50	
											40	
											25	
											10	
											10 C	

7	12	14	17	20	22	26	29	30	32	33	35	36	38	39	41	42	43	46	51
0,5	0,8	1,0	1,2	1,4	1,5	1,8	2,0	2,1	2,2	2,3	2,4	2,5	2,6	2,7	2,8	2,9	3,0	3,2	3,5
140	180	205	230	250	265	295	310	320	330										
155	200	230	255	280	290	325	345	355	**365**										
215	285	320	360	390	410	455	485	495	510										
95	130	145	160	175	185	205	220	225	230										
110	140	160	180	195	205	230	245	250	**255**										
130	170	195	215	235	245	275	290	300	305										
150	200	225	250	275	285	320	340	350	360										
175	220	250	285	310	325	365	385	395	400	420	425	435	450	455	465	475			

7	12	14	17	20	22	26	29	32	35	38	41	43	46	51	54	59	62	67
0,5	0,8	1,0	1,2	1,4	1,5	1,8	2,0	2,2	2,4	2,6	2,8	3,0	3,2	3,5	3,7	4,1	4,3	4,6
160	210	240	270	295	305	340	365	385	405	425	440	460	480	505				
180	235	270	300	330	340	380	405	425	450	470	490	510	530	**560**				
250	330	375	420	460	475	530	565	600	630	660	685	715	745	785				
110	145	165	185	205	210	235	250	265	280	295	305	320	330	350				
125	165	185	205	225	235	260	280	295	310	325	340	355	365	**385**				
150	195	220	245	270	280	310	330	350	370	385	405	420	435	460				
175	230	260	290	315	330	365	390	415	435	455	475	495	515	540				
195	260	290	325	355	370	410	440	465	490	515	535	560	575	605	630	670	685	720

7	12	14	17	20	22	26	29	30	32	33	35	36	38	39	41	42	43	45	46	51	54	58	62	67	70	72	75
0,5	0,8	1,0	1,2	1,4	1,5	1,8	2,0	2,1	2,2	2,3	2,4	2,5	2,6	2,7	2,8	2,9	3,0	3,1	3,2	3,5	3,7	4,0	4,3	4,6	4,8	5,0	5,2
215	285	325	360	395	410	455	485	500	515	525	540																
240	315	360	400	440	455	505	539	555	570	585	**600**																
335	440	505	560	615	640	710	755	775	800	820	840																
155	200	230	255	280	290	325	345	355	365	375	385																
170	225	255	285	310	325	360	380	395	405	415	**425**																
200	265	305	335	370	385	425	455	470	480	495	505																
240	310	355	395	435	450	505	535	550	565	580	595																
270	355	400	450	490	515	570	600	625	640	655	670	685	700	720	735	750	765	780									

12	14	17	20	22	26	29	32	35	38	41	43	46	51	54	58	62	67	70	72	75
0,8	1,0	1,2	1,4	1,5	1,8	2,0	2,2	2,4	2,6	2,8	3,0	3,2	3,5	3,7	4,0	4,3	4,6	4,8	5,0	5,2
420	480	535	585	610	680	720	765	805	840	880	915	950	1000	1035						
470	535	595	650	680	755	800	850	895	935	975	1015	1055	1115	**1150**						
655	750	835	910	950	1055	1125	1185	1250	1310	1370	1425	1480	1560	1610						
295	335	375	410	425	475	500	530	560	585	610	635	660	695	720						
325	370	415	455	470	525	560	590	620	650	680	710	735	775	**800**						
390	445	495	540	560	625	665	700	740	775	810	845	875	920	950						
460	520	580	635	660	735	780	825	870	910	950	990	1030	1085	1120						
515	585	655	720	740	830	885	930	980	1025	1070	1120	1160	1220	1260	1315	1380	1435	1465		

SIZE	LI/SS	New tire		Tire in service		SLR	RC	Rim	Permitted rims	Tube	Speed	PRESSURE
		SW mm +/- 1,5%	OD mm +/- 1,5%	SW max mm	OD max mm	mm +/- 2%	mm +/- 2,5%				Km/h	psi / bar / MAX. LOAD kg
10.0/75-15.3 8PR IM110	119A8	260	800	277	810	358	2388	9.00	9.00FB	10.0/75-15.3 TR15	Free Rolling	
											50	
											40	
											10	
	106A8										Driving wheel	
											50	
											40	
											25	
											10	
											10 C	

SIZE	LI/SS	New tire		Tire in service		SLR	RC	Rim	Permitted rims	Tube	Speed	PRESSURE
		SW mm +/- 1,5%	OD mm +/- 1,5%	SW max mm	OD max mm	mm +/- 2%	mm +/- 2,5%				Km/h	psi / bar / MAX. LOAD kg
10.0/75-15.3 10PR IM110	123A8	265	805	282	815	370	2433	9.00	9.00FB		Free Rolling	
											50	
											40	
											10	
	111A8										Driving wheel	
											50	
											40	
											25	
											10	
											10 C	

SIZE	LI/SS	New tire		Tire in service		SLR	RC	Rim	Permitted rims	Tube	Speed	PRESSURE
		SW mm +/- 1,5%	OD mm +/- 1,5%	SW max mm	OD max mm	mm +/- 2%	mm +/- 2,5%				Km/h	psi / bar / MAX. LOAD kg
6.00-16 8PR IM110	103A8	175	750	177	760	342	2253	4.50E	4.25KA - 4.5K 4.00E	6.00-16 TR15	Free Rolling	
											50	
											40	
											10	
	91A8										Driving wheel	
											50	
											40	
											25	
											10	
											10 C	

SIZE	LI/SS	New tire		Tire in service		SLR	RC	Rim	Permitted rims	Tube	Speed	PRESSURE
		SW mm +/- 1,5%	OD mm +/- 1,5%	SW max mm	OD max mm	mm +/- 2%	mm +/- 2,5%				Km/h	psi / bar / MAX. LOAD kg
6.50-16 8PR IM110	105A8	183	762	198	769	351	2304	5.50F	4.5K-6.50E-5K 5.00F-(4.00E)	8.25-16 V3-02-08 TR76	Free Rolling	
											50	
											40	
											10	
	93A8										Driving wheel	
											50	
											40	
											25	
											10	
											10 C	

7	12	14	17	20	22	26	29	32	35	38	41	43	45	46	51	54	58	62	67	70	72	75
0,5	**0,8**	**1,0**	**1,2**	**1,4**	**1,5**	**1,8**	**2,0**	**2,2**	**2,4**	**2,6**	**2,8**	**3,0**	**3,1**	**3,2**	**3,5**	**3,7**	**4,0**	**4,3**	**4,6**	**4,8**	**5,0**	**5,2**
420	555	630	705	770	800	890	945	1000	1055	1105	1155	1200	1225									
470	615	700	780	855	890	990	1050	1115	1170	1225	1280	1335	**1360**									
655	860	985	1095	1195	1245	1385	1475	1560	1640	1720	1795	1870	1905									
295	385	440	490	535	560	620	660	700	735	770	805	840	855									
325	430	490	545	595	620	690	735	775	820	855	895	930	**950**									
390	510	585	650	710	740	820	875	925	975	1020	1065	1110	1130									
460	600	685	765	835	870	965	1030	1090	1145	1200	1255	1305	1330									
515	680	775	860	940	980	1090	1160	1220	1295	1350	1410	1465	1500	1530	1610	1665	1745					

7	12	14	17	20	26	29	32	35	38	41	43	45	46	51	54	57	62	67	70	72	74
0,5	**0,8**	**1,0**	**1,2**	**1,5**	**1,8**	**2,0**	**2,2**	**2,4**	**2,6**	**2,8**	**3,0**	**3,1**	**3,2**	**3,5**	**3,7**	**3,9**	**4,3**	**4,6**	**4,8**	**5,0**	**5,1**
420	555	630	700	795	885	945	1000	1050	1105	1150	1195	1220	1240	1310	1355	1395					
465	615	700	780	885	985	1050	1110	1165	1225	1275	1330	1355	1380	1455	1505	**1550**					
650	860	980	1090	1240	1380	1470	1555	1630	1715	1785	1860	1895	1930	2035	2105	2170					
295	385	440	490	565	625	660	700	740	775	810	840	860	875	925	950	980					
330	430	490	545	625	695	735	780	820	860	900	935	955	970	1025	1055	**1090**					
395	510	585	650	745	825	875	930	975	1025	1070	1115	1135	1155	1220	1255	1295					
460	600	685	765	875	975	1030	1090	1150	1205	1260	1310	1335	1360	1435	1475	1525					
520	680	775	860	985	1095	1160	1230	1295	1355	1420	1475	1505	1530	1615	1665	1720	1820	1890	1940	1985	2010

14	17	22	26	29	32	35	38	39	42	46	51	54	58	62	67	70	72	75
1,0	**1,2**	**1,5**	**1,8**	**2,0**	**2,2**	**2,4**	**2,6**	**2,9**	**3,0**	**3,2**	**3,5**	**3,7**	**4,0**	**4,3**	**4,6**	**4,8**	**5,0**	**5,2**
350	390	445	495	525	555	585	610	640	665	690	730	750	790					
390	435	495	550	585	615	650	680	710	740	770	810	835	**875**					
545	605	690	765	815	865	910	950	995	1035	1075	1135	1170	1225					
245	275	310	345	370	390	410	430	450	470	485	510	530	555					
275	305	345	385	410	435	455	480	500	520	540	570	590	**615**					
325	360	410	460	490	515	545	570	595	620	645	675	700	730					
380	425	485	540	575	605	640	670	700	730	755	795	825	860					
435	480	545	605	645	685	720	755	790	820	850	900	930	970	1010	1050	1080	1105	1130

12	14	17	20	22	26	29	32	35	38	41	43	46	51	54	58	62	67	70	72	75
0,8	**1,0**	**1,2**	**1,4**	**1,5**	**1,8**	**2,0**	**2,2**	**2,4**	**2,6**	**2,8**	**3,0**	**3,2**	**3,5**	**3,7**	**4,0**	**4,3**	**4,6**	**4,8**	**5,0**	**5,2**
340	385	430	470	490	545	580	615	645	675	705	735	765	805	835						
380	430	480	525	545	605	645	680	720	750	785	820	850	895	**925**						
530	600	670	735	765	850	905	955	1005	1055	1100	1145	1190	1255	1295						
240	270	300	330	345	385	410	430	455	475	495	520	535	565	585						
265	300	335	370	385	425	455	480	505	530	550	575	595	630	**650**						
315	360	400	440	455	505	540	570	600	630	655	685	710	750	775						
370	425	470	515	535	595	635	670	705	740	775	805	835	880	910						
420	475	530	585	605	670	720	755	795	835	865	905	940	995	1025	1070	1120	1165	1190		

SIZE	LI/SS	New tire		Tire in service		SLR	RC	Rim	Permitted rims	Tube	Speed	PRESSURE
		SW mm +/- 1,5%	OD mm +/- 1,5%	SW max mm	OD max mm	mm +/- 2%	mm +/- 2,5%				Km/h	psi / bar / MAX. LOAD kg
7.50-16 8PR IM110	112A8	208	805	225	819	363	2413	5.50F	5.00F-5K 6.00F-6LB (5.50FSDC-4.50E)	8.25-16 V3-02-08 TR76	Free Rolling 50 **40** 10	
	99A8										Driving wheel 50 **40** 25 10 10 C	

SIZE	LI/SS	New tire		Tire in service		SLR	RC	Rim	Permitted rims	Tube	Speed	PRESSURE
		SW mm +/- 1,5%	OD mm +/- 1,5%	SW max mm	OD max mm	mm +/- 2%	mm +/- 2,5%				Km/h	psi / bar / MAX. LOAD kg
8.25-16 8PR IM110	116A8	215	825	240	849	373	2469	5.50F			Free Rolling 50 **40** 10	
	104A8										Driving wheel 50 **40** 25 10 10 C	

SIZE	LI/SS	New tire		Tire in service		SLR	RC	Rim	Permitted rims	Tube	Speed	PRESSURE
		SW mm +/- 1,5%	OD mm +/- 1,5%	SW max mm	OD max mm	mm +/- 2%	mm +/- 2,5%				Km/h	psi / bar / MAX. LOAD kg
9.0/75-16 6PR IM110	111A8	225	780	238	786	349	2330	W8	W7	9.00-16 TR15	Free Rolling 50 **40** 10	
	99A8										Driving wheel 50 **40** 25 10 10 C	

SIZE	LI/SS	New tire		Tire in service		SLR	RC	Rim	Permitted rims	Tube	Speed	PRESSURE
		SW mm +/- 1,5%	OD mm +/- 1,5%	SW max mm	OD max mm	mm +/- 2%	mm +/- 2,5%				Km/h	psi / bar / MAX. LOAD kg
250/80-16 8PR IM110	125A8	240	816	271	834	364	2424	W8	W7-W9	9.00-16 TR15	Free Rolling 50 **40** 10	
	113A8										Driving wheel 50 **40** 25 10 10 C	

7	12	14	17	20	22	26	29	32	35	38	41	43	46	50	53	57	60
0,5	0,8	1,0	1,2	1,4	1,5	1,8	2,0	2,2	2,4	2,6	2,8	3,0	3,2	3,5	3,7	4,0	4,2
340	450	510	570	620	645	720	765	810	850	895	930	970	1010				
380	500	565	630	691	720	800	850	900	945	990	1035	1080	**1120**				
530	695	795	885	965	1005	1120	1190	1260	1325	1390	1450	1510	1570				
235	310	355	395	430	450	500	530	560	590	615	645	670	700				
260	345	390	435	480	500	554	590	620	655	685	715	745	**775**				
310	410	465	520	570	595	660	700	740	780	815	855	890	920				
365	480	550	610	670	695	775	825	870	915	960	1005	1045	1085				
410	545	615	685	755	790	875	930	980	1035	1080	1130	1175	1220	1285	1335	1395	1435

7	12	14	17	20	22	26	29	32	35	38	41	42	43	46	51	54	55	58	61	62	67	70	72	75
0,5	0,8	1,0	1,2	1,4	1,5	1,8	2,0	2,2	2,4	2,6	2,8	2,9	3,0	3,2	3,5	3,7	3,8	4,0	4,2	4,3	4,6	4,8	5,0	5,2
400	530	605	670	735	765	850	905	955	1005	1055	1105	1125												
445	590	670	745	815	850	945	1005	1065	1120	1175	1200	**1250**												
625	825	940	1045	1140	1190	1325	1410	1490	1565	1640	1715	1750												
290	380	435	485	530	550	615	650	690	725	760	795	810												
320	425	485	535	590	610	680	725	765	805	845	880	**900**												
385	505	575	640	700	730	810	860	910	960	1005	1050	1070												
450	595	675	750	825	855	955	1015	1070	1130	1180	1235	1260												
505	670	765	845	930	960	1070	1145	1205	1270	1335	1390	1420	1450	1505	1585	1640	1665							

7	12	14	17	20	22	26	29	30	32	33	35	36	38	41	43	46	49	51	54	58	62	67	70	72
0,5	0,8	1,0	1,2	1,4	1,5	1,8	2,0	2,1	2,2	2,3	2,4	2,5	2,6	2,8	3,0	3,2	3,4	3,5	3,7	4,0	4,3	4,6	4,8	5,0
375	490	560	625	685	710	790	840	865	890	915	935	960	980											
415	545	625	695	760	790	880	935	960	990	1015	1040	1065	**1090**											
580	765	870	970	1065	1105	1230	1310	1345	1385	1420	1455	1490	1525											
265	350	400	445	485	505	565	600	615	635	650	665	680	700											
295	390	445	495	540	560	625	665	685	705	720	740	755	**775**											
350	465	525	585	645	670	745	790	815	835	860	880	900	920											
415	545	620	690	755	785	875	930	960	985	1010	1035	1060	1085											
465	615	700	780	850	885	985	1050	1080	1110	1135	1165	1190	1220	1275	1335	1380	1425							

7	12	14	17	20	22	26	29	32	35	38	41	43	46	51	52	54	58	62	67	70	72	75
0,5	0,8	1,0	1,2	1,4	1,5	1,8	2,0	2,2	2,4	2,6	2,8	3,0	3,2	3,5	3,6	3,7	4,0	4,3	4,6	4,8	5,0	5,2
540	715	815	905	990	1030	1145	1220	1290	1355	1420	1485											
600	795	905	1005	1100	1145	1275	1355	1435	1510	1580	**1650**											
845	1110	1265	1405	1540	1605	1785	1895	2005	2110	2210	2310											
380	500	565	630	690	720	800	850	900	945	990	1035											
420	555	630	700	765	800	890	945	1000	1050	1100	**1150**											
500	660	750	835	915	950	1055	1125	1190	1250	1310	1370											
590	775	880	980	1075	1115	1245	1325	1400	1470	1540	1610											
660	875	995	1105	1205	1260	1405	1490	1575	1655	1735	1815	1885	1965	2065	2095							

SIZE	LI/SS	New tire		Tire in service		SLR	RC	Rim	Permitted rims	Tube	Speed	PRESSURE
		SW mm +/- 1,5%	OD mm +/- 1,5%	SW max mm	OD max mm	mm +/- 2%	mm +/- 2,5%				Km/h	psi / bar / MAX. LOAD kg
7.50-18 6PR IM110	106A8	203	870	225	875	399	2626	5.50F	4-50E 5.00F-6.00F	7.50-18 TR15	Free Rolling	
											50	
											40	
											10	
	94A8										Driving wheel	
											50	
											40	
											25	
											10	
											10 C	

SIZE	LI/SS	New tire		Tire in service		SLR	RC	Rim	Permitted rims	Tube	Speed	PRESSURE
		SW mm +/- 1,5%	OD mm +/- 1,5%	SW max mm	OD max mm	mm +/- 2%	mm +/- 2,5%				Km/h	psi / bar / MAX. LOAD kg
250/80-18 8PR IM110	127A8	240	875	271	885	386	2589	W8	W7-W9-9-9.00	7.50-18 TR15	Free Rolling	
											50	
											40	
											10	
	115A8										Driving wheel	
											50	
											40	
											25	
											10	
											10 C	

SIZE	LI/SS	New tire		Tire in service		SLR	RC	Rim	Permitted rims	Tube	Speed	PRESSURE
		SW mm +/- 1,5%	OD mm +/- 1,5%	SW max mm	OD max mm	mm +/- 2%	mm +/- 2,5%				Km/h	psi / bar / MAX. LOAD kg
4.50-19 2PR IM110	66A8	120	740	130	748	342	2234	3.00D	3.50D	4.00-19 TR15	Free Rolling	
											50	
											40	
											10	
	54A8										Driving wheel	
											50	
											40	
											25	
											10	
											10 C	

SIZE	LI/SS	New tire		Tire in service		SLR	RC	Rim	Permitted rims	Tube	Speed	PRESSURE
		SW mm +/- 1,5%	OD mm +/- 1,5%	SW max mm	OD max mm	mm +/- 2%	mm +/- 2,5%				Km/h	psi / bar / MAX. LOAD kg
4.00-21 2PR IM110	66A8	110	765	115	777	358	2330	3.00D	2.50C	4.00-21	Free Rolling	
											50	
											40	
											10	
	54A8										Driving wheel	
											50	
											40	
											25	
											10	
											10 C	

7	12	14	17	20	22	26	29	30	32	33	35	38	41	43	46	51	54	58	61	62	67	70	72	75
0,5	**0,8**	**1,0**	**1,2**	**1,4**	**1,5**	**1,8**	**2,0**	**2,1**	**2,2**	**2,3**	**2,4**	**2,6**	**2,8**	**3,0**	**3,2**	**3,5**	**3,7**	**4,0**	**4,2**	**4,3**	**4,6**	**4,8**	**5,0**	**5,2**
350	460	525	585	640	665	740	790	810	835	855														
390	510	585	650	710	740	825	875	900	925	**950**														
545	715	820	910	995	1035	1150	1225	1260	1295	1330														
245	325	370	410	450	470	520	555	570	590	605														
275	360	410	460	500	520	580	615	635	655	**670**														
325	430	490	545	595	620	690	735	755	775	795														
385	505	575	640	700	730	810	865	890	915	940														
435	570	645	725	790	820	915	970	1000	1035	1055	1080	1135	1185	1240										

7	12	14	17	20	22	26	29	32	35	38	41	43	46	52	54	58	62	67	70	72
0,5	**0,8**	**1,0**	**1,2**	**1,4**	**1,5**	**1,8**	**2,0**	**2,2**	**2,4**	**2,6**	**2,8**	**3,0**	**3,2**	**3,6**	**3,7**	**4,0**	**4,3**	**4,6**	**4,8**	**5,0**
575	755	860	960	1050	1095	1215	1295	1370	1440	1510	1575									
640	840	960	1065	1165	1215	1350	1435	1520	1600	1675	**1750**									
895	1175	1340	1490	1635	1700	1890	2010	2130	2240	2345	2450									
400	525	600	665	730	760	845	900	950	1000	1045	1095									
445	585	665	740	810	845	940	1000	1055	1110	1165	**1215**									
525	695	790	880	965	1005	1115	1190	1255	1320	1385	1445									
620	820	930	1035	1135	1180	1315	1395	1475	1555	1630	1700									
700	925	1050	1165	1275	1335	1480	1575	1665	1750	1835	1915	1995	2075	2215						

7	12	14	17	20	23	26	29	30	32	33	35	36	38	41	42
0,5	**0,8**	**1,0**	**1,2**	**1,4**	**1,6**	**1,8**	**2,0**	**2,1**	**2,2**	**2,3**	**2,4**	**2,5**	**2,6**	**2,8**	**2,9**
160	215	245	270												
180	235	270	**300**												
250	330	380	420												
115	150	170	190												
125	165	190	**210**												
150	200	225	250												
180	235	265	295												
195	260	300	330	365	395										

7	12	14	17	20	22	26	29	30	32	33	35	36	38	41	42
0,5	**0,8**	**1,0**	**1,2**	**1,4**	**1,5**	**1,8**	**2,0**	**2,1**	**2,2**	**2,3**	**2,4**	**2,5**	**2,6**	**2,8**	**2,9**
140	185	215	235	260	270										
160	210	235	265	290	**300**										
220	290	330	370	405	420										
100	130	150	165	185	190										
110	145	165	185	205	**210**										
130	175	200	220	245	250										
155	205	235	260	285	295										
175	230	260	290	325	330	370	395								

SIZE	LI/SS	New tire		Tire in service		SLR	RC	Rim	Permitted rims	Tube	Speed	PRESSURE
		SW mm +/- 1,5%	OD mm +/- 1,5%	SW max mm	OD max mm	mm +/- 2%	mm +/- 2,5%				Km/h	psi / bar / MAX. LOAD kg
210/95-20 IM220	119A8	214	907	224	922	417	2746	W6			Free Rolling	
											50	
											40	
											10	
	107A8					427	2775				Driving wheel	
											50	
											40	
											25	
											10	
											10 C	

7	12	14	17	20	23	26	29	30	32	35	38	41	43	46	51
0,5	0,8	1,0	1,2	1,4	1,6	1,8	2,0	2,1	2,2	2,4	2,6	2,8	3,0	3,2	3,5
460	585	665	745	835	925	995	1060	1105	1145	1225					
510	650	740	825	925	1030	1105	1180	1225	1270	**1360**					
675	840	950	1060	1165	1290	1420	1520	1565	1610	1705	1815	1925			
325	415	470	520	590	655	710	765	795	820	880					
365	460	520	580	655	730	790	850	880	915	**975**					
430	550	620	690	780	870	940	1010	1050	1085	1160					
480	600	675	750	820	910	1005	1085	1120	1155	1230	1305	1380			
625	760	850	940	1020	1105	1185	1295	1350	1395	1490	1575	1660	1740	1830	1960

For technical notes about pressure tables please refer to page 244.

TD27

Tire for power-driven and towed agricultural machinery. It permits maximum exploitation of tire according to the use, offering structural strength, versatility and the opportunity to make optimal use of the potential in any vehicle/machine.

SIZE

4.00/4.50-21 **4 PR**

SIZE	Tread pattern	SW mm	OD mm	SLR mm	RC mm	Rim	Permitted Rims	Tube
4.00/4.50-21 4 PR	**TD27**	110	765	362	2270	**3.00D**	2.50C	

PRESSURE							
psi	**26**	**29**	**32**	**35**	**38**	**39**	**43**
bar	**1,8**	**2,0**	**2,2**	**2,4**	**2,6**	**2,7**	**3,0**
MAX. LOAD kg							
25	370	385	410	435	450	465	
30	345	365	385	410	425	**435**	
35	325	340	360	385	400	410	
40	310	325	345	365	380	390	
F							450

For technical notes about pressure tables please refer to page 244.

T404 T421 T423 T478

A complete range of Low Ground Pressure tires, designed for field application with maximum respect for the soil, available in a variety of tread patterns and a wide range of sizes.

TWIN 404 – The non-aggressive tread pattern makes this tire suitable for soft terrain. Characterized by its rounded shoulder design and wide contact area.

TWIN 421 e TWIN 423 – The unique bias-belt design, maximizes the ground contact area, improving flotation and traction. The rounded shoulder ensures minimum soil compaction.

TWIN 478 – The grooved tread pattern minimizes rolling resistance and is ideal for road-work.
The rounded shoulder enlarges the ground contact area.

SIZE		
280/60-15.5	115A8	T421
280/60-15.5	125A8	T421
280/60-15.5	128A8	T478
400/45-15.5	116A8	T423
400/60-15.5	145A8	T404
400/60-15.5	148A8	T404
400/60-15.5	145A8	T478
420/55-17	133A8	T421
400/55-17.5	131A8	T404
400/55-22.5	147A8	T404
500/45-22.5	146A8	T404
500/60-22.5	155A8	T404
500/60-22.5	155A8	T421
560/45-22.5	154A8	T404
560/60-22.5	158A8	T404
560/60-22.5	167A8	T404
600/50-22.5	156A8	T404
600/50-22.5	156A8	T423
600/50-22.5	165A8	T404

SIZE		
600/50-22.5	168A8	T404
710/40-22.5	158A8	T404
400/60-26.5	147A8	T404
500/60-26.5	159A8	T421
600/55-26.5	166A8	T404
600/55-26.5	166A8	T421
600/55-26.5	173A8	T421
710/45-26.5	169A8	T404
710/45-26.5	169A8	T423 MK2
800/40-26.5	172A8	T404
800/40-26.5	172A8	T423 MK2
600/60-30.5	171A8	T421
650/65-30.5	173A8	T404
710/50-30.5	175A8	T404
710/50-30.5	175A8	T423
750/60-30.5	178A8	T404
800/45-30.5	178A8	T404
800/45-30.5	178A8	T423
850/50-30.5	179A8	T404

SIZE	LI/SS	New tire		Tire in service		SLR	RC	Rim	Speed	PRESSURE
		SW mm +/- 1,5%	OD mm +/- 1,5%	SW max mm	OD max mm	mm +/- 2%	mm +/- 2,5%		Km/h	psi / bar / MAX. LOAD kg
280/60-15.5 TL T421	115A8	260	730	275	747	325	2142	AG8.00	Free Rolling	
									50	
									40	
									10	
	103A8					335	2163		Driving wheel	
									50	
									40	
									25	
									10	
									10 C	

SIZE	LI/SS	New tire		Tire in service		SLR	RC	Rim	Speed	PRESSURE
		SW mm +/- 1,5%	OD mm +/- 1,5%	SW max mm	OD max mm	mm +/- 2%	mm +/- 2,5%		Km/h	psi / bar / MAX. LOAD kg
280/60-15.5 TL T421	125A8	272	736	278	747	331	2194	AG8.00	Free Rolling	
									50	
									40	
									10	
	113A8								Driving wheel	
									50	
									40	
									25	
									10	
									10 C	

SIZE	LI/SS	New tire		Tire in service		SLR	RC	Rim	Speed	PRESSURE
		SW mm +/- 1,5%	OD mm +/- 1,5%	SW max mm	OD max mm	mm +/- 2%	mm +/- 2,5%		Km/h	psi / bar / MAX. LOAD kg
280/60-15.5 TT T478	128A8	260	730	275	747	325	2142	AG8.00	Free Rolling	
									50	
									40	
									10	
									10 C	

SIZE	LI/SS	New tire		Tire in service		SLR	RC	Rim	Speed	PRESSURE
		SW mm +/- 1,5%	OD mm +/- 1,5%	SW max mm	OD max mm	mm +/- 2%	mm +/- 2,5%		Km/h	psi / bar / MAX. LOAD kg
400/45-15.5 TL T423	116A8	385	740	436	779	360	2172	AG13.00	Free Rolling	
									50	
									40	
									10	
	104A8								Driving wheel	
									50	
									40	
									25	
									10	
									10 C	

7	12	14	17	20	23	26	29	32	35	38	41	43	46	49	51	52	54	55	58	59	67	72	75	84
0,5	0,8	1,0	1,2	1,4	1,6	1,8	2,0	2,2	2,4	2,6	2,8	3,0	3,2	3,4	3,5	3,6	3,7	3,8	4,0	4,1	4,6	5,0	5,2	5,8
410	520	600	675	755	835	895	955	1025	1095															
455	580	665	750	835	925	995	1060	1140	**1215**															
600	750	855	955	1060	1165	1275	1365	1445	1530	1625	1720													
290	370	425	475	530	585	630	675	730	785															
325	410	470	530	590	650	700	750	810	**875**															
385	490	560	630	700	775	835	890	965	1040															
425	535	605	675	750	820	895	960	1020	1090	1165	1240													
555	680	760	840	920	1005	1085	1165	1250	1325	1395	1470	1545	1630	1715	1760									

7	12	14	17	20	23	26	29	32	35	38	41	43	46	49	52	55	58	59	62	67	70	72	75	84
0,5	0,8	1,0	1,2	1,4	1,6	1,8	2,0	2,2	2,4	2,6	2,8	3,0	3,2	3,4	3,6	3,8	4,0	4,1	4,3	4,6	4,8	5,0	5,2	5,8
410	520	600	675	755	835	895	955	1025	1095	1175	1260	1305	1350	1420	1485									
455	580	665	750	835	925	995	1060	1140	1215	1305	1400	1450	1500	1575	**1650**									
600	750	855	955	1060	1165	1275	1365	1445	1530	1625	1720	1835	1950	2010	2085	2155	2245	2290						
290	370	425	475	530	585	630	675	730	785	845	900	930	955	995	1035									
325	410	470	530	590	650	700	750	810	875	935	1000	1030	1060	1105	**1150**									
385	490	560	630	700	775	835	890	965	1040	1115	1190	1230	1260	1315	1370									
425	535	605	675	750	820	895	960	1020	1090	1165	1240	1315	1395	1425	1475	1520	1570	1595						
555	680	760	840	920	1005	1085	1165	1250	1325	1395	1470	1545	1630	1715	1800	1885	1975	2015	2070	2105	2170	2225	2290	

7	12	17	23	29	35	41	46	52	58	61	64	67	72	75	84
0,5	0,8	1,2	1,6	2,0	2,4	2,8	3,2	3,6	4,0	4,2	4,4	4,6	5,0	5,2	5,8
410	520	675	835	955	1095	1260	1350	1485	1620						
455	580	750	925	1060	1215	1400	1500	1650	**1800**						
600	750	955	1165	1365	1530	1720	1950	2085	2245	2335	2430	2520			
660	800	995	1190	1390	1580	1745	1915	2105	2325	2420	2460	2500	2675	2765	3025

7	12	17	23	26	29	32	35	38	41	43	46
0,5	0,8	1,2	1,6	1,8	2,0	2,2	2,4	2,6	2,8	3,0	3,2
565	720	925	1125								
630	800	1030	**1250**								
830	1035	1315	1590	1720							
395	505	655	810								
440	560	730	**900**								
525	665	870	1070								
580	725	925	1135	1240							
755	920	1145	1375	1495	1610						

SIZE	LI/SS	New tire		Tire in service		SLR	RC	Rim	Speed	PRESSURE
		SW mm +/- 1,5%	OD mm +/- 1,5%	SW max mm	OD max mm	mm +/- 2%	mm +/- 2,5%		Km/h	psi / bar / MAX. LOAD kg
400/60-15.5 TL T404	145A8	400	875	436	907	384	2568	AG13.00	Free Rolling	
									50	
									40	
									10	
	132A8					396	2594		Driving wheel	
									50	
									40	
									25	
									10	
									10 C	

SIZE	LI/SS	New tire		Tire in service		SLR	RC	Rim	Speed	PRESSURE
		SW mm +/- 1,5%	OD mm +/- 1,5%	SW max mm	OD max mm	mm +/- 2%	mm +/- 2,5%		Km/h	psi / bar / MAX. LOAD kg
400/60-15.5 TL T404	148A8	410	875	436	907	384	2568	AG13.00	Free Rolling	
									50	
									40	
									10	
	136A8					396	2594		Driving wheel	
									50	
									40	
									25	
									10	
									10 C	

SIZE	LI/SS	New tire		Tire in service		SLR	RC	Rim	Speed	PRESSURE
		SW mm +/- 1,5%	OD mm +/- 1,5%	SW max mm	OD max mm	mm +/- 2%	mm +/- 2,5%		Km/h	psi / bar / MAX. LOAD kg
400/60-15.5 TL T478	145A8	400	875	436	907	384	2598	AG13.00	Free Rolling	
									50	
									40	
									10	
									10 C	

SIZE	LI/SS	New tire		Tire in service		SLR	RC	Rim	Speed	PRESSURE
		SW mm +/- 1,5%	OD mm +/- 1,5%	SW max mm	OD max mm	mm +/- 2%	mm +/- 2,5%		Km/h	psi / bar / MAX. LOAD kg
420/55-17 TL T421	133A8	415	898	420	912	397	2667	13.00	Free Rolling	
									50	
									40	
									10	
	121A8					404	2685		Driving wheel	
									50	
									40	
									25	
									10	
									10 C	

7	12	17	23	26	29	32	35	38	41	43	46	49	52	55	58	59	67	72	75	84
0,5	**0,8**	**1,2**	**1,6**	**1,8**	**2,0**	**2,2**	**2,4**	**2,6**	**2,8**	**3,0**	**3,2**	**3,4**	**3,6**	**3,8**	**4,0**	**4,1**	**4,6**	**5,0**	**5,2**	**5,8**
730	925	1190	1440	1555	1665	1785	1910	2045	2185	2255	2320	2460	2610							
810	1030	1320	1600	1725	1850	1985	2120	2275	2430	2505	2575	2735	**2900**							
1065	1335	1690	2035	2205	2370	2515	2670	2835	3000	3195	3385	3465	3590	3720	3925	4025				
515	655	855	1010	1085	1155	1255	1350	1460	1575	1625	1665	1760	1855							
575	730	950	1120	1205	1285	1390	1500	1625	1750	1805	1850	1955	**2060**							
685	870	1130	1335	1435	1530	1655	1785	1930	2085	2145	2200	2325	2450							
755	945	1205	1445	1545	1655	1750	1865	1995	2125	2280	2440	2495	2580	2665	2795	2860				
985	1200	1490	1795	1945	2050	2175	2280	2400	2520	2645	2790	2935	3105	3270	3460	3530	3675	3965	4105	

7	12	17	23	26	29	32	35	38	41	43	46	49	52	55	58	61	64	67	72	75	78	81	84
0,5	**0,8**	**1,2**	**1,6**	**1,8**	**2,0**	**2,2**	**2,4**	**2,6**	**2,8**	**3,0**	**3,2**	**3,4**	**3,6**	**3,8**	**4,0**	**4,2**	**4,4**	**4,6**	**5,0**	**5,2**	**5,4**	**5,6**	**5,8**
730	925	1190	1440	1555	1665	1785	1910	2045	2185	2255	2320	2460	2610	2725	2835								
810	1030	1320	1600	1725	1850	1985	2120	2275	2430	2505	2575	2735	2900	3025	**3150**								
1065	1335	1690	2035	2205	2370	2515	2670	2835	3000	3195	3385	3465	3590	3720	3925	4100	4260	4410					
515	655	855	1010	1085	1155	1255	1350	1460	1575	1625	1665	1760	1855	1935	2015								
575	730	950	1120	1205	1285	1390	1500	1625	1750	1805	1850	1955	2060	2150	**2240**								
685	870	1130	1335	1435	1530	1655	1785	1930	2085	2145	2200	2325	2450	2560	2665								
755	945	1205	1445	1545	1655	1750	1865	1995	2125	2280	2440	2495	2580	2665	2795	2860	3030	3135					
985	1200	1490	1795	1945	2050	2175	2280	2400	2520	2645	2790	2935	3105	3270	3460	3530	3640	3675	3965	4105	4235	4355	4480

7	12	17	23	26	29	32	35	38	41	43	46	49	52	55	58	59	67	72	75
0,5	**0,8**	**1,2**	**1,6**	**1,8**	**2,0**	**2,2**	**2,4**	**2,6**	**2,8**	**3,0**	**3,2**	**3,4**	**3,6**	**3,8**	**4,0**	**4,1**	**4,6**	**5,0**	**5,2**
730	925	1190	1440	1555	1665	1785	1910	2045	2185	2255	2320	2460	2610						
810	1030	1320	1600	1725	1850	1985	2120	2275	2430	2505	2575	2735	**2900**						
1065	1335	1690	2035	2205	2370	2515	2670	2835	3000	3195	3385	3465	3590	3720	3925	4025			
1170	1425	1765	2100	2270	2430	2590	2740	2890	3040	3185	3345	3500	3670	3845	4035	4115	4295	4675	4855

7	12	14	17	20	23	26	29	32	33	35	38	41	42	43	46	49	51	52	54	55	58	59	67	72	75	84
0,5	**0,8**	**1,0**	**1,2**	**1,4**	**1,6**	**1,8**	**2,0**	**2,2**	**2,3**	**2,4**	**2,6**	**2,8**	**2,9**	**3,0**	**3,2**	**3,4**	**3,5**	**3,6**	**3,7**	**3,8**	**4,0**	**4,1**	**4,6**	**5,0**	**5,2**	**5,8**
815	1035	1170	1305	1460	1620	1740	1855																			
905	1150	1300	1450	1625	1800	1935	**2060**																			
1190	1490	1680	1860	2050	2265	2480	2660	2810	2885																	
585	740	835	925	1025	1125	1215	1305																			
650	825	930	1030	1140	1250	1350	**1450**																			
770	980	1105	1225	1355	1485	1610	1725																			
855	1070	1205	1335	1455	1590	1720	1850	1970	2030																	
1115	1355	1520	1680	1820	1965	2105	2255	2410	2485	2550	2695	2835	2900													

SIZE	LI/SS	New tire		Tire in service		SLR	RC	Rim	Speed	PRESSURE
		SW mm +/- 1,5%	OD mm +/- 1,5%	SW max mm	OD max mm	mm +/- 2%	mm +/- 2,5%		Km/h	psi / bar / MAX. LOAD kg
400/55-17.5 TT T404	131A8	400	880	420	902	388	2583	AG11.75	Free Rolling	
									50	
									40	
									10	
	119A8					400	2609		Driving wheel	
									50	
									40	
									25	
									10	
									10 C	

SIZE	LI/SS	New tire		Tire in service		SLR	RC	Rim	Speed	PRESSURE
		SW mm +/- 1,5%	OD mm +/- 1,5%	SW max mm	OD max mm	mm +/- 2%	mm +/- 2,5%		Km/h	psi / bar / MAX. LOAD kg
400/55-22.5 TL T404	147A8	400	1000	420	1021	450	3035	AG11.75	Free Rolling	
									50	
									40	
									10	
	135A8					460	3045		Driving wheel	
									50	
									40	
									25	
									10	
									10 C	

SIZE	LI/SS	New tire		Tire in service		SLR	RC	Rim	Speed	PRESSURE
		SW mm +/- 1,5%	OD mm +/- 1,5%	SW max mm	OD max mm	mm +/- 2%	mm +/- 2,5%		Km/h	psi / bar / MAX. LOAD kg
500/45-22.5 TL T404	146A8	500	1020	528	1042	450	3020	AG16.00	Free Rolling	
									50	
									40	
									10	
	134A8					465	3050		Driving wheel	
									50	
									40	
									25	
									10	
									10 C	

SIZE	LI/SS	New tire		Tire in service		SLR	RC	Rim	Speed	PRESSURE
		SW mm +/- 1,5%	OD mm +/- 1,5%	SW max mm	OD max mm	mm +/- 2%	mm +/- 2,5%		Km/h	psi / bar / MAX. LOAD kg
500/60-22.5 TL T404	155A8	500	1170	528	1200	500	3490	AG16.00	Free Rolling	
									50	
									40	
									10	
	143A8					530	3510		Driving wheel	
									50	
									40	
									25	
									10	
									10 C	

7	12	14	17	20	23	26	29	32	33	35	38	41	42	43	46	49	52	55	58	59	67	72	75	84
0,5	0,8	1,0	1,2	1,4	1,6	1,8	2,0	2,2	2,3	2,4	2,6	2,8	2,9	3,0	3,2	3,4	3,6	3,8	4,0	4,1	4,6	5,0	5,2	5,8
770	980	1120	1260	1395	1530	1645	1755																	
855	1090	1245	1400	1550	1700	1825	**1950**																	
1125	1410	1600	1790	1980	2160	2340	2510	2660	2730															
550	695	800	900	980	1060	1145	1225																	
610	775	885	1000	1090	1180	1270	**1360**																	
725	920	1055	1190	1300	1405	1515	1620																	
800	1005	1140	1275	1415	1520	1625	1745	1850	1905															
1045	1275	1425	1580	1735	1890	2045	2160	2290	2345	2405	2535	2665	2720											

7	12	14	17	20	23	26	29	32	35	38	41	43	46	51	54	58	59	67	72	75	84
0,5	0,8	1,0	1,2	1,4	1,6	1,8	2,0	2,2	2,4	2,6	2,8	3,0	3,2	3,5	3,7	4,0	4,1	4,6	5,0	5,2	5,8
860	1095	1245	1395	1555	1710	1840	1960	2105	2250	2430	2610	2690	2770								
955	1215	1385	1550	1725	1900	2045	2180	2340	2500	2700	2900	2990	**3075**								
1260	1575	1785	1985	2190	2405	2620	2810	2975	3150	3345	3540	3785	4040	4240	4325						
620	790	885	980	1085	1190	1290	1395	1505	1620	1735	1855	1910	1960								
690	875	985	1090	1205	1320	1435	1550	1675	1800	1930	2060	2125	**2180**								
820	1040	1170	1295	1435	1570	1710	1845	1995	2140	2295	2450	2525	2595								
905	1135	1275	1415	1540	1680	1820	1960	2100	2245	2400	2550	2710	2870	3010	3065						
1180	1440	1615	1785	1925	2080	2230	2385	2545	2700	2865	3025	3190	3360	3615	3800	4070	4265	4330			

7	12	14	17	20	23	26	29	32	35	38	41	43	46	49	51	52	54	55	58	59	67	72	75	84
0,5	0,8	1,0	1,2	1,4	1,6	1,8	2,0	2,2	2,4	2,6	2,8	3,0	3,2	3,4	3,5	3,6	3,7	3,8	4,0	4,1	4,6	5,0	5,2	5,8
1025	1305	1485	1665	1840	2015	2170	2320	2510	2700															
1140	1450	1650	1850	2045	2240	2410	2575	2785	**3000**															
1500	1880	2125	2370	2615	2850	3085	3310	3510	3735	3995	4250													
730	925	1045	1155	1295	1440	1555	1665	1785	1910															
810	1030	1160	1285	1440	1600	1725	1850	1985	**2120**															
965	1225	1380	1530	1715	1905	2055	2200	2365	2525															
1065	1335	1505	1670	1815	2010	2205	2370	2520	2670	2835	3005													
1390	1695	1900	2100	2270	2450	2630	2855	3065	3265	3445	3620	3790	3980	4170	4260									

7	12	14	17	20	23	26	29	32	35	38	41	43	46	49	51	52	54	55	58	59	67	72	75	84
0,5	0,8	1,0	1,2	1,4	1,6	1,8	2,0	2,2	2,4	2,6	2,8	3,0	3,2	3,4	3,5	3,6	3,7	3,8	4,0	4,1	4,6	5,0	5,2	5,8
1310	1665	1895	2125	2365	2610	2815	3015	3250	3490															
1455	1850	2105	2360	2630	2900	3130	3350	3610	**3875**															
1915	2395	2715	3025	3335	3665	3995	4290	4560	4850	5170	5490													
910	1155	1340	1530	1695	1855	1990	2125	2290	2450															
1010	1285	1490	1700	1880	2060	2215	2360	2540	**2725**															
1200	1530	1775	2025	2240	2450	2635	2810	3025	3245															
1330	1665	1900	2145	2405	2620	2840	3045	3220	3415	3635	3860													
1735	2115	2370	2620	2915	3195	3480	3725	3975	4190	4415	4630	4845	5095	5350	5475									

SIZE	LI/SS	New tire		Tire in service		SLR	RC	Rim	Speed	PRESSURE
		SW mm +/- 1,5%	OD mm +/- 1,5%	SW max mm	OD max mm	mm +/- 2%	mm +/- 2,5%		Km/h	psi / bar / MAX. LOAD kg
500/60-22.5 TL T421	155A8	500	1170	528	1200	525	3490	AG16.00	Free Rolling	
									50	
									40	
									10	
	143A8					545	3510		Driving wheel	
									50	
									40	
									25	
									10	
									10 C	

SIZE	LI/SS	New tire		Tire in service		SLR	RC	Rim	Speed	PRESSURE
		SW mm +/- 1,5%	OD mm +/- 1,5%	SW max mm	OD max mm	mm +/- 2%	mm +/- 2,5%		Km/h	psi / bar / MAX. LOAD kg
560/45-22.5 TL T404	154A8	540	1075	609	1111	475	3235	AG16.00	Free Rolling	
									50	
									40	
									10	
	142A8					490	3245		Driving wheel	
									50	
									40	
									25	
									10	
									10 C	

SIZE	LI/SS	New tire		Tire in service		SLR	RC	Rim	Speed	PRESSURE
		SW mm +/- 1,5%	OD mm +/- 1,5%	SW max mm	OD max mm	mm +/- 2%	mm +/- 2,5%		Km/h	psi / bar / MAX. LOAD kg
560/60-22.5 TL T404	158A8	564	1235	609	1291	525	3675	AG16.00	Free Rolling	
									50	
									40	
									10	
	145A8					541	3685		Driving wheel	
									50	
									40	
									25	
									10	
									10 C	

SIZE	LI/SS	New tire		Tire in service		SLR	RC	Rim	Speed	PRESSURE
		SW mm +/- 1,5%	OD mm +/- 1,5%	SW max mm	OD max mm	mm +/- 2%	mm +/- 2,5%		Km/h	psi / bar / MAX. LOAD kg
560/60-22.5 TL T404	167A8	564	1235	609	1291	525	3675	AG16.00	Free Rolling	
									50	
									40	
									10	
	155A8					541	3685		Driving wheel	
									50	
									40	
									25	
									10	
									10 C	

7	12	14	17	20	23	26	29	32	35	38	41	43	46	49	51	52	54	55	58	59	67	72	75	84
0,5	0,8	1,0	1,2	1,4	1,6	1,8	2,0	2,2	2,4	2,6	2,8	3,0	3,2	3,4	3,5	3,6	3,7	3,8	4,0	4,1	4,6	5,0	5,2	5,8
1310	1665	1895	2125	2365	2610	2815	3015	3250	3490															
1455	1850	2105	2360	2630	2900	3130	3350	3610	**3875**															
1915	2395	2715	3025	3335	3665	3995	4290	4560	4850	5170	5490													
910	1155	1340	1530	1695	1855	1990	2125	2290	2450															
1010	1285	1490	1700	1880	2060	2215	2360	2540	**2725**															
1200	1530	1775	2025	2240	2450	2635	2810	3025	3245															
1330	1665	1900	2145	2405	2620	2840	3045	3220	3415	3635	3860													
1735	2115	2370	2620	2915	3195	3480	3715	3975	4190	4415	4630	4845	5095	5350	5475									

7	12	14	17	20	23	26	29	32	35	38	41	43	46	49	51	52	54	55	58	59	67	72	75	84
0,5	0,8	1,0	1,2	1,4	1,6	1,8	2,0	2,2	2,4	2,6	2,8	3,0	3,2	3,4	3,5	3,6	3,7	3,8	4,0	4,1	4,6	5,0	5,2	5,8
1275	1620	1845	2070	2295	2520	2725	2925	3150	3375															
1415	1800	2050	2300	2550	2800	3025	3250	3500	**3750**															
1860	2330	2640	2945	3250	3555	3855	4150	4420	4700	5005	5310													
885	1125	1305	1485	1645	1800	1935	2070	2225	2385															
980	1250	1445	1650	1825	2000	2150	2300	2475	**2650**															
1170	1485	1720	1965	2170	2380	2560	2735	2945	3155															
1295	1620	1850	2080	2330	2545	2755	2955	3135	3325	3540	3755													
1685	2055	2305	2550	2835	3100	3375	3615	3855	4070	4290	4510	4720	4960	5205	5325									

7	12	14	17	20	23	26	29	32	33	38	41	42	46	49	51	52	54	55	58	59	67	72	75	84
0,5	0,8	1,0	1,2	1,4	1,6	1,8	2,0	2,2	2,3	2,6	2,8	2,9	3,2	3,4	3,5	3,6	3,7	3,8	4,0	4,1	4,6	5,0	5,2	5,8
1625	2070	2380	2700	2995	3285	3555	3825																	
1805	2300	2645	3000	3325	3650	3950	**4250**																	
2380	2980	3390	3820	4240	4635	5030	5415	5770	5950															
1165	1485	1695	1910	2115	2320	2510	2700																	
1295	1650	1885	2120	2350	2575	2790	**3000**																	
1545	1965	2245	2525	2795	3065	3320	3570																	
1705	2140	2425	2710	2995	3275	3550	3820	4075	4200															
2225	2715	3040	3365	3690	4015	4335	4650	4965	5120	5560	5860	6000												

7	12	14	17	20	23	26	29	32	35	38	41	43	46	49	52	55	58	59	67	72	75	84
0,5	0,8	1,0	1,2	1,4	1,6	1,8	2,0	2,2	2,4	2,6	2,8	3,0	3,2	3,4	3,6	3,8	4,0	4,1	4,6	5,0	5,2	5,8
1625	2070	2380	2700	2995	3285	3555	3825	4105	4390	4650	4905											
1805	2300	2645	3000	3325	3650	3950	4250	4565	4875	5165	**5450**											
2380	2980	3390	3820	4240	4635	5030	5415	5770	6140	6330	6905	7250	7590									
1165	1485	1695	1910	2115	2320	2510	2700	2905	3105	3295	3485											
1295	1650	1885	2120	2350	2575	2790	3000	3225	3450	3665	**3875**											
1545	1965	2245	2525	2795	3065	3320	3570	3840	4105	4360	4610											
1705	2140	2425	2710	2995	3275	3550	3820	4075	4335	4610	4885	5140	5395									
2225	2715	3040	3365	3690	4015	4335	4650	4965	5260	5560	5860	6155	6465	6780	7075	7375	7655	7810				

SIZE	LI/SS	New tire SW mm +/- 1,5%	New tire OD mm +/- 1,5%	Tire in service SW max mm	Tire in service OD max mm	SLR mm +/- 2%	RC mm +/- 2,5%	Rim	Speed Km/h	PRESSURE psi bar MAX. LOAD kg
600/50-22.5 TL T404	156A8	610	1170	638	1214	520	3460	AG20.00	Free Rolling	
									50	
									40	
									10	
	144A8					540	3500		Driving wheel	
									50	
									40	
									25	
									10	
									10 C	

SIZE	LI/SS	New tire SW mm +/- 1,5%	New tire OD mm +/- 1,5%	Tire in service SW max mm	Tire in service OD max mm	SLR mm +/- 2%	RC mm +/- 2,5%	Rim	Speed Km/h	PRESSURE psi bar MAX. LOAD kg
600/50-22.5 TL T423	156A8	600	1170	630	1214	520	3460	AG20.00	Free Rolling	
									50	
									40	
									10	
	144A8					540	3500		Driving wheel	
									50	
									40	
									25	
									10	
									10 C	

SIZE	LI/SS	New tire SW mm +/- 1,5%	New tire OD mm +/- 1,5%	Tire in service SW max mm	Tire in service OD max mm	SLR mm +/- 2%	RC mm +/- 2,5%	Rim	Speed Km/h	PRESSURE psi bar MAX. LOAD kg
600/50-22.5 TL T404	165A8	610	1170	638	1214	510		AG20.00	Free Rolling	
									50	
									40	
									10	
	153A8					530			Driving wheel	
									50	
									40	
									25	
									10	
									10 C	

SIZE	LI/SS	New tire SW mm +/- 1,5%	New tire OD mm +/- 1,5%	Tire in service SW max mm	Tire in service OD max mm	SLR mm +/- 2%	RC mm +/- 2,5%	Rim	Speed Km/h	PRESSURE psi bar MAX. LOAD kg
600/50-22.5 TL T404	168A8	610	1170	638	1214	500		AG20.00	Free Rolling	
									50	
									40	
									10	
	156A8								Driving wheel	
									50	
									40	
									25	
									10	
									10 C	

7	12	14	17	20	23	26	29	32	33	35	38	41	42	43	46	49	52	54	58	61	64	67	72	75	84
0,5	0,8	1,0	1,2	1,4	1,6	1,8	2,0	2,2	2,3	2,4	2,6	2,8	2,9	3,0	3,2	3,4	3,6	3,7	4,0	4,2	4,4	4,6	5,0	5,2	5,8
1540	1960	2240	2520	2810	3105	3355	3600																		
1715	2180	2490	2800	3125	3450	3730	**4000**																		
2255	2825	3200	3580	3955	4355	4755	5110	5440	5600																
1095	1395	1595	1800	1995	2185	2355	2520																		
1220	1550	1775	2000	2215	2430	2620	**2800**																		
1450	1845	2110	2380	2635	2890	3115	3330																		
1605	2010	2280	2550	2825	3090	3350	3595	3815	3920																
2090	2550	2855	3160	3470	3780	4090	4385	4685	4830	4950	5220	5485	5600												

7	12	14	17	20	23	26	29	32	33	35	38	41	42	43	46	49	52	54	58	61	64	67	72	75	84
0,5	0,8	1,0	1,2	1,4	1,6	1,8	2,0	2,2	2,3	2,4	2,6	2,8	2,9	3,0	3,2	3,4	3,6	3,7	4,0	4,2	4,4	4,6	5,0	5,2	5,8
1540	1960	2240	2520	2810	3105	3355	3600																		
1715	2180	2490	2800	3125	3450	3730	**4000**																		
2255	2825	3200	3580	3955	4355	4755	5110	5440	5600																
1095	1395	1595	1800	1995	2185	2355	2520																		
1220	1550	1775	2000	2215	2430	2620	**2800**																		
1450	1845	2110	2380	2635	2890	3115	3330																		
1605	2010	2280	2550	2825	3090	3350	3595	3815	3920																
2090	2550	2855	3160	3470	3780	4090	4385	4685	4830	4950	5220	5485	5600												

7	12	14	17	20	23	26	29	32	35	38	41	43	46	49	52	55	58	59
0,5	0,8	1,0	1,2	1,4	1,6	1,8	2,0	2,2	2,4	2,6	2,8	3,0	3,2	3,4	3,6	3,8	4,0	4,1
1540	1960	2240	2520	2810	3105	3355	3600	3880	4165	4400	4635							
1715	2180	2490	2800	3125	3450	3730	4000	4310	4625	4890	**5150**							
2255	2825	3200	3580	3955	4355	4755	5110	5440	5790	6170	6550	6865	7175					
1095	1395	1595	1800	1995	2185	2355	2520	2720	2925	3105	3285							
1220	1550	1775	2000	2215	2430	2620	2800	3025	3250	3450	**3650**							
1450	1845	2110	2380	2635	2890	3115	3330	3600	3865	4105	4345							
1605	2010	2280	2550	2825	3090	3350	3595	3815	4055	4335	4605	4845	5085					
2090	2550	2855	3160	3470	3780	4090	4385	4685	4950	5220	5485	5755	6065	6370	6665	6945	7210	7360

7	12	14	17	20	23	26	29	32	35	38	41	43	46	49	52	58	61	64	67
0,5	0,8	1,0	1,2	1,4	1,6	1,8	2,0	2,2	2,4	2,6	2,8	3,0	3,2	3,4	3,6	4,0	4,2	4,4	4,6
1540	1960	2240	2520	2810	3105	3355	3600	3880	4165	4400	4635	4840	5040						
1715	2180	2490	2800	3125	3450	3730	4000	4310	4625	4890	5150	5380	**5600**						
2255	2825	3200	3580	3955	4355	4755	5110	5440	5790	6170	6550	6865	7175	7440	7875				
1095	1395	1595	1800	1995	2185	2355	2520	2720	2925	3105	3285	3445	3600						
1220	1550	1775	2000	2215	2430	2620	2800	3025	3250	3450	3650	3825	**4000**						
1450	1845	2110	2380	2635	2890	3115	3330	3600	3865	4105	4345	4555	4760						
1605	2010	2280	2550	2825	3090	3350	3595	3815	4055	4335	4605	4845	5085	5295	5625				
2090	2550	2855	3160	3470	3780	4090	4385	4685	4950	5220	5485	5755	6065	6370	6800	7210	751		

SIZE	LI/SS	New tire		Tire in service		SLR	RC	Rim	Speed	PRESSURE
		SW mm +/- 1,5%	OD mm +/- 1,5%	SW max mm	OD max mm	mm +/- 2%	mm +/- 2,5%		Km/h	psi / bar / MAX. LOAD kg
710/40-22.5 TL T404	158A8	710	1160	773	1179	510	3460	AG24.00	Free Rolling	
									50	
									40	
									10	
	146A8					525	3470		Driving wheel	
									50	
									40	
									25	
									10	
									10 C	

SIZE	LI/SS	New tire		Tire in service		SLR	RC	Rim	Speed	PRESSURE
		SW mm +/- 1,5%	OD mm +/- 1,5%	SW max mm	OD max mm	mm +/- 2%	mm +/- 2,5%		Km/h	psi / bar / MAX. LOAD kg
400/60-26.5 TT T404	147A8	400	1160	425	1187	525	3470	AG13.00	Free Rolling	
									50	
									40	
									10	
	135A8					540	3490		Driving wheel	
									50	
									40	
									25	
									10	
									10 C	

SIZE	LI/SS	New tire		Tire in service		SLR	RC	Rim	Speed	PRESSURE
		SW mm +/- 1,5%	OD mm +/- 1,5%	SW max mm	OD max mm	mm +/- 2%	mm +/- 2,5%		Km/h	psi / bar / MAX. LOAD kg
500/60-26.5 TL T421	159A8	500	1260	528	1289	560	3790	AG16.00	Free Rolling	
									50	
									40	
									10	
	147A8					580	3810		Driving wheel	
									50	
									40	
									25	
									10	
									10 C	

According to availability

SIZE	LI/SS	New tire		Tire in service		SLR	RC	Rim	Speed	PRESSURE
		SW mm +/- 1,5%	OD mm +/- 1,5%	SW max mm	OD max mm	mm +/- 2%	mm +/- 2,5%		Km/h	psi / bar / MAX. LOAD kg
600/55-26.5 TL T404	166A8	620	1360	638	1379	595	3970	AG20.00	Free Rolling	
									50	
									40	
									10	
	154A8					619	4000		Driving wheel	
									50	
									40	
									25	
									10	
									10 C	

7	12	14	17	20	23	26	29	32	33	35	38	41	42	43	46	49	52	54	58	61	64	67	72	75	84
0,5	0,8	1,0	1,2	1,4	1,6	1,8	2,0	2,2	2,3	2,4	2,6	2,8	2,9	3,0	3,2	3,4	3,6	3,7	4,0	4,2	4,4	4,6	5,0	5,2	5,8
1625	2070	2385	2700	2995	3285	3555	3825																		
1810	2300	2650	3000	3325	3650	3950	**4250**																		
2380	2980	3395	3820	4240	4635	5030	5415	5775	5950																
1165	1485	1695	1910	2115	2315	2510	2700																		
1295	1650	1885	2120	2350	2575	2790	**3000**																		
1545	1965	2245	2525	2795	3065	3320	3570																		
1710	2140	2425	2710	2995	3275	3550	3820	4075	4200																
2230	2715	3040	3365	3690	4015	4340	4650	4965	5120	5260	5560	5860	6000												

7	12	14	17	20	23	26	29	32	35	38	41	43	46	49	51	52	54	58	61	64	67	72	75	84
0,5	0,8	1,0	1,2	1,4	1,6	1,8	2,0	2,2	2,4	2,6	2,8	3,0	3,2	3,4	3,5	3,6	3,7	4,0	4,2	4,4	4,6	5,0	5,2	5,8
1060	1350	1530	1710	1890	2070	2260	2455	2615	2770															
1180	1500	1700	1900	2100	2300	2510	2725	2905	**3075**															
1555	1945	2195	2440	2685	2930	3170	3425	3685	3920	4130	4355													
750	955	1075	1190	1335	1485	1620	1755	1860	1960															
835	1060	1195	1320	1485	1650	1800	1950	2065	**2180**															
990	1260	1420	1570	1765	1965	2140	2320	2460	2595															
1095	1375	1545	1715	1865	2070	2275	2455	2640	2800	2935	3085													
1430	1745	1955	2160	2335	2520	2700	2935	3160	3385	3590	3795	3975	4145	4315	4380									

7	12	14	17	20	23	26	29	32	35	38	41	43	46	49	51	52	54	58	61	64	67	72	75	84
0,5	0,8	1,0	1,2	1,4	1,6	1,8	2,0	2,2	2,4	2,6	2,8	3,0	3,2	3,4	3,5	3,6	3,7	4,0	4,2	4,4	4,6	5,0	5,2	5,8
1455	1855	2120	2385	2655	2925	3155	3375	3655	3940															
1620	2060	2355	2650	2950	3250	3505	3750	4060	**4375**															
2130	2670	3030	3385	3745	4110	4480	4810	5105	5440	5825	6195													
1025	1305	1505	1710	1890	2070	2230	2385	2575	2765															
1140	1450	1675	1900	2100	2300	2475	2650	2860	**3075**															
1355	1725	1990	2260	2500	2735	2950	3155	3405	3660															
1500	1880	2140	2405	2685	2930	3170	3400	3610	3840	4100	4355													
1955	2385	2670	2960	3275	3580	3885	4160	4435	4685	4940	5190	5450	5740	6030	6180									

7	12	14	17	20	23	26	29	32	35	38	41	43	46	49	51	52	54	58	61	64	67	72	75	84
0,5	0,8	1,0	1,2	1,4	1,6	1,8	2,0	2,2	2,4	2,6	2,8	3,0	3,2	3,4	3,5	3,6	3,7	4,0	4,2	4,4	4,6	5,0	5,2	5,8
1820	2320	2625	2925	3260	3600	3885	4165	4470	4770															
2025	2575	2915	3250	3625	4000	4315	4625	4965	**5300**															
2665	3335	3765	4175	4595	5050	5510	5920	6295	6680	7090	7505													
1310	1665	1870	2070	2295	2520	2725	2925	3150	3375															
1455	1850	2080	2300	2550	2800	3025	3250	3500	**3750**															
1730	2200	2475	2735	3035	3330	3605	3870	4165	4460															
1915	2395	2695	2990	3250	3555	3860	4150	4420	4700	5005	5310													
2495	3045	3410	3770	4070	4390	4705	5050	5395	5715	6035	6355	6675	7015	7360	7535									

SIZE	LI/SS	New tire		Tire in service		SLR	RC	Rim	Speed	PRESSURE
		SW mm +/- 1,5%	OD mm +/- 1,5%	SW max mm	OD max mm	mm +/- 2%	mm +/- 2,5%		Km/h	psi / bar / MAX. LOAD kg
600/55-26.5 TL T421	166A8	600	1350	638	1379	595	3970	AG20.00	Free Rolling	
									50	
									40	
									10	
	154A8					619	4000		Driving wheel	
									50	
									40	
									25	
									10	
									10 C	

SIZE	LI/SS	New tire		Tire in service		SLR	RC	Rim	Speed	PRESSURE
		SW mm +/- 1,5%	OD mm +/- 1,5%	SW max mm	OD max mm	mm +/- 2%	mm +/- 2,5%		Km/h	psi / bar / MAX. LOAD kg
600/55-26.5 T421	173A8	610	1350	638	1379			AG20.00	Free Rolling	
									50	
									40	
									10	
	161A8								Driving wheel	
									50	
									40	
									25	
									10	
									10 C	

SIZE	LI/SS	New tire		Tire in service		SLR	RC	Rim	Speed	PRESSURE
		SW mm +/- 1,5%	OD mm +/- 1,5%	SW max mm	OD max mm	mm +/- 2%	mm +/- 2,5%		Km/h	psi / bar / MAX. LOAD kg
710/45-26.5 TL T404	169A8	710	1350	773	1384	600	3980	AG24.00	Free Rolling	
									50	
									40	
									10	
	157A8					620	4000		Driving wheel	
									50	
									40	
									25	
									10	
									10 C	

SIZE	LI/SS	New tire		Tire in service		SLR	RC	Rim	Speed	PRESSURE
		SW mm +/- 1,5%	OD mm +/- 1,5%	SW max mm	OD max mm	mm +/- 2%	mm +/- 2,5%		Km/h	psi / bar / MAX. LOAD kg
710/45-26.5 TL T423 MK2	169A8	710	1350	773	1384	590	3970	AG24.00	Free Rolling	
									50	
									40	
									10	
	157A8					610	4020		Driving wheel	
									50	
									40	
									25	
									10	
									10 C	

7	12	14	17	20	23	26	29	32	35	38	41	43	46	49	51	52	54	58	61	64	67	72	75	84
0,5	0,8	1,0	1,2	1,4	1,6	1,8	2,0	2,2	2,4	2,6	2,8	3,0	3,2	3,4	3,5	3,6	3,7	4,0	4,2	4,4	4,6	5,0	5,2	5,8
1820	2320	2625	2925	3260	3600	3885	4165	4470	4770															
2025	2575	2915	3250	3625	4000	4315	4625	4965	**5300**															
2665	3335	3765	4175	4595	5050	5510	5920	6295	6680	7090	7505													
1310	1665	1870	2070	2295	2520	2725	2925	3150	3375															
1455	1850	2080	2300	2550	2800	3025	3250	3500	**3750**															
1730	2200	2475	2735	3035	3330	3605	3870	4165	4460															
1915	2395	2695	2990	3250	3555	3860	4150	4420	4700	5005	5310													
2495	3045	3410	3770	4070	4390	4705	5050	5395	5715	6035	6355	6675	7015	7360	7535									

7	11	14	17	20	23	26	29	32	35	38	41	43	46	49	51	52	54	58	61	64	67
0.5	0.8	1.0	1.2	1.4	1.6	1.8	2.0	2.2	2.4	2.6	2.8	3.0	3.2	3.4	3.5	3,6	3.7	4.0	4.2	4.4	4.6
1820	2320	2625	2925	3260	3600	3885	4165	4470	4770	5150	5535	5700	5850								
2025	2575	2915	3250	3625	4000	4315	4625	4965	5300	5720	6150	6335	**6500**								
2665	3335	3765	4175	4595	5050	5510	5920	6295	6680	7090	7505	8030	8565	8760	8975	9060	9140				
1310	1665	1870	2070	2295	2520	2725	2925	3150	3375	3655	3935	4055	4160								
1455	1850	2080	2300	2550	2800	3025	3250	3500	3750	4060	4375	4505	**4625**								
1730	2200	2475	2735	3035	3330	3605	3870	4165	4460	4830	5205	5365	5505								
1915	2395	2695	2990	3250	3555	3860	4150	4420	4700	5005	5310	5700	6095	6235	6385	6445	6505				
2495	3045	3410	3770	4070	4390	4705	5050	5395	5715	6035	6355	6675	7015	7360	7535	7765	7995	8645	9000	9100	9180

7	12	14	17	20	23	26	29	32	35	38	41	43	46	49	51	52	54	58	61	64	67	72	75	84
0,5	0,8	1,0	1,2	1,4	1,6	1,8	2,0	2,2	2,4	2,6	2,8	3,0	3,2	3,4	3,5	3,6	3,7	4,0	4,2	4,4	4,6	5,0	5,2	5,8
1980	2520	2860	3195	3565	3940	4225	4500	4860	5220															
2200	2800	3175	3550	3960	4375	4695	5000	5400	**5800**															
2895	3625	4100	4555	5015	5520	6030	6460	6825	7245	7735	8215													
1415	1800	2030	2250	2510	2770	2985	3195	3455	3715															
1570	2000	2255	2500	2785	3075	3315	3550	3835	**4125**															
1870	2380	2680	2975	3315	3660	3945	4225	4565	4910															
2070	2590	2920	3240	3535	3885	4235	4550	4830	5145	5500	5840													
2700	3290	3685	4080	4410	4765	5115	5515	5910	6270	6615	6955	7300	7690	8085	8290									

7	12	14	17	20	23	26	29	32	35	38	41	43	46	49	51	52	54	58	61	64	67	72	75	84
0,5	0,8	1,0	1,2	1,4	1,6	1,8	2,0	2,2	2,4	2,6	2,8	3,0	3,2	3,4	3,5	3,6	3,7	4,0	4,2	4,4	4,6	5,0	5,2	5,8
1980	2520	2860	3195	3565	3940	4225	4500	4860	5220															
2200	2800	3175	3550	3960	4375	4695	5000	5400	**5800**															
2895	3625	4100	4555	5015	5520	6030	6460	6825	7245	7735	8215													
1415	1800	2030	2250	2510	2770	2985	3195	3455	3715															
1570	2000	2255	2500	2785	3075	3315	3550	3835	**4125**															
1870	2380	2680	2975	3315	3660	3945	4225	4565	4910															
2070	2590	2920	3240	3535	3885	4235	4550	4830	5145	5500	5840													
2700	3290	3685	4080	4410	4765	5115	5515	5910	6270	6615	6955	7300	7690	8085	8290									

SIZE	LI/SS	New tire		Tire in service		SLR	RC	Rim	Speed	PRESSURE
		SW	OD	SW	OD					psi
		mm	mm	max	max	mm	mm		Km/h	bar
		+/- 1,5%	+/- 1,5%	mm	mm	+/- 2%	+/- 2,5%			MAX. LOAD kg
	172A8	800	1350	840	1379	590	3970	AG28.00	Free Rolling	
									50	
									40	
									10	
800/40-26.5 TL	159A8					610	4020		Driving wheel	
T404									50	
									40	
									25	
									10	
									10 C	

SIZE	LI/SS	New tire		Tire in service		SLR	RC	Rim	Speed	PRESSURE
		SW	OD	SW	OD					psi
		mm	mm	max	max	mm	mm		Km/h	bar
		+/- 1,5%	+/- 1,5%	mm	mm	+/- 2%	+/- 2,5%			MAX. LOAD kg
	172A8	800	1350	840	1379	600	3970	AG28.00	Free Rolling	
									50	
									40	
									10	
800/40-26.5 TL	159A8					620	4020		Driving wheel	
T423 MK2									50	
									40	
									25	
									10	
									10 C	

SIZE	LI/SS	New tire		Tire in service		SLR	RC	Rim	Speed	PRESSURE
		SW	OD	SW	OD					psi
		mm	mm	max	max	mm	mm		Km/h	bar
		+/- 1,5%	+/- 1,5%	mm	mm	+/- 2%	+/- 2,5%			MAX. LOAD kg
	171A8	620	1500	638	1536	655	4420	AG20.00	Free Rolling	
									50	
									40	
									10	
600/60-30.5 TL	159A8					680	4450		Driving wheel	
T421									50	
									40	
									25	
									10	
									10 C	

According to availability

SIZE	LI/SS	New tire		Tire in service		SLR	RC	Rim	Speed	PRESSURE
		SW	OD	SW	OD					psi
		mm	mm	max	max	mm	mm		Km/h	bar
		+/- 1,5%	+/- 1,5%	mm	mm	+/- 2%	+/- 2,5%			MAX. LOAD kg
	173A8	660	1650	697	1679	710	4830	AG20.00	Free Rolling	
									50	
									40	
									10	
650/65-30.5 TL	160A8					740	4860		Driving wheel	
T404									50	
									40	
									25	
									10	
									10 C	

7	12	14	17	20	23	26	29	32	35	38	41	43	46	49	51	52	54	58	61	64	67	72	75	84
0,5	0,8	1,0	1,2	1,4	1,6	1,8	2,0	2,2	2,4	2,6	2,8	3,0	3,2	3,4	3,5	3,6	3,7	4,0	4,2	4,4	4,6	5,0	5,2	5,8
2120	2700	3090	3490	3880	4275	4595	4905	5285	5670															
2355	3000	3435	3875	4310	4750	5105	5450	5875	**6300**															
3105	3885	4415	4945	5475	6010	6545	7020	7430	7890	8405	8925													
1500	1910	2180	2450	2735	3015	3255	3485	3715	3940															
1665	2120	2420	2725	3035	3350	3615	3875	4130	**4375**															
1980	2525	2885	3245	3615	3985	4300	4610	4910	5205															
2195	2745	3115	3485	3850	4230	4615	4960	5270	5575	5875	6195													
2860	3490	3905	4325	4740	5160	5575	6010	6440	6830	7210	7585	7910	8275	8635	8790									

7	12	14	17	20	23	26	29	32	35	38	41	43	46	49	51	52	54	58	61	64	67	72	75	84
0,5	0,8	1,0	1,2	1,4	1,6	1,8	2,0	2,2	2,4	2,6	2,8	3,0	3,2	3,4	3,5	3,6	3,7	4,0	4,2	4,4	4,6	5,0	5,2	5,8
2120	2700	3090	3490	3880	4275	4595	4905	5285	5670															
2355	3000	3435	3875	4310	4750	5105	5450	5875	**6300**															
3105	3885	4415	4945	5475	6010	6545	7020	7430	7890	8405	8925													
1500	1910	2180	2450	2735	3015	3255	3485	3715	3940															
1665	2120	2420	2725	3035	3350	3615	3875	4130	**4375**															
1980	2525	2885	3245	3615	3985	4300	4610	4910	5205															
2195	2745	3115	3485	3850	4230	4615	4960	5270	5575	5875	6195													
2860	3490	3905	4325	4740	5160	5575	6010	6440	6830	7210	7585	7910	8275	8635	8790									

7	12	14	17	20	23	26	29	32	35	38	41	43	46	49	51	52	54	58	61	64	67	72	75	84
0,5	0,8	1,0	1,2	1,4	1,6	1,8	2,0	2,2	2,4	2,6	2,8	3,0	3,2	3,4	3,5	3,6	3,7	4,0	4,2	4,4	4,6	5,0	5,2	5,8
2050	2610	2990	3375	3765	4165	4470	4770	5150	5535															
2280	2900	3325	3750	4185	4625	4970	5300	5725	**6150**															
3000	3760	4270	4785	5300	5835	6375	6835	7230	7680	8200	8710													
1455	1855	2120	2385	2655	2925	3155	3375	3655	3935															
1620	2060	2355	2650	2950	3250	3505	3750	4060	**4375**															
1925	2450	2805	3155	3510	3870	4170	4465	4830	5205															
2130	2670	3030	3385	3745	4110	4480	4810	5105	5440	5825	6195													
2780	3390	3795	4200	4610	5015	5420	5840	6250	6625	6985	7345	7720	8140	8565	8790									

7	12	14	17	20	23	26	29	32	33	35	38	41	42	43	46	49	51	52	54	58	61	64	67	72	75	84
0,5	0,8	1,0	1,2	1,4	1,6	1,8	2,0	2,2	2,3	2,4	2,6	2,8	2,9	3,0	3,2	3,4	3,5	3,6	3,7	4,0	4,2	4,4	4,6	5,0	5,2	5,8
2510	3195	3675	4165	4605	5040	5450	5850																			
2790	3550	4085	4625	5115	5600	6055	**6500**																			
3675	4600	5235	5895	6540	7130	7715	8300	8835	9100																	
1770	2250	2585	2925	3260	3600	3885	4160																			
1965	2500	2875	3250	3625	4000	4315	**4625**																			
2340	2975	3420	3870	4310	4760	5135	5505																			
2585	3240	3685	4130	4595	5050	5510	5920	6295	6475																	
3375	4115	4605	5100	5625	6135	6650	7175	7685	7950	8155	8610	9055	9250													

SIZE	LI/SS	New tire		Tire in service		SLR	RC	Rim	Speed	PRESSURE
		SW mm +/- 1,5%	OD mm +/- 1,5%	SW max mm	OD max mm	mm +/- 2%	mm +/- 2,5%		Km/h	psi bar MAX. LOAD kg
710/50-30.5 TL T404	175A8	727	1500	773	1534	650	4425	AG24.00	Free Rolling	
									50	
									40	
									10	
	163A8					680	4455		Driving wheel	
									50	
									40	
									25	
									10	
									10 C	

SIZE	LI/SS	New tire		Tire in service		SLR	RC	Rim	Speed	PRESSURE
		SW mm +/- 1,5%	OD mm +/- 1,5%	SW max mm	OD max mm	mm +/- 2%	mm +/- 2,5%		Km/h	psi bar MAX. LOAD kg
710/50-30.5 TL T423	175A8	730	1500	773	1534	660	4425	AG24.00	Free Rolling	
									50	
									40	
									10	
	163A8					690	4455		Driving wheel	
									50	
									40	
									25	
									10	
									10 C	

SIZE	LI/SS	New tire		Tire in service		SLR	RC	Rim	Speed	PRESSURE
		SW mm +/- 1,5%	OD mm +/- 1,5%	SW max mm	OD max mm	mm +/- 2%	mm +/- 2,5%		Km/h	psi bar MAX. LOAD kg
750/60-30.5 TL T404	178A8	750	1650	804	1738	710	4830	AG24.00	Free Rolling	
									50	
									40	
									10	
	166A8					740	4870		Driving wheel	
									50	
									40	
									25	
									10	
									10 C	

SIZE	LI/SS	New tire		Tire in service		SLR	RC	Rim	Speed	PRESSURE
		SW mm +/- 1,5%	OD mm +/- 1,5%	SW max mm	OD max mm	mm +/- 2%	mm +/- 2,5%		Km/h	psi bar MAX. LOAD kg
800/45-30.5 TL T404	178A8	800	1500	862	1545	650	4455	AG28.00	Free Rolling	
									50	
									40	
									10	
	166A8					670	4485		Driving wheel	
									50	
									40	
									25	
									10	
									10 C	

7	12	14	17	20	23	26	29	32	35	38	41	43	46	49	51	52	54	58	61	64	67	72	75	84
0,5	0,8	1,0	1,2	1,4	1,6	1,8	2,0	2,2	2,4	2,6	2,8	3,0	3,2	3,4	3,5	3,6	3,7	4,0	4,2	4,4	4,6	5,0	5,2	5,8
2300	2925	3320	3715	4170	4635	5020	5400	5805	6210															
2555	3250	3690	4125	4635	5150	5580	6000	6450	**6900**															
3365	4210	4760	5290	5830	6455	7095	7640	8150	8675	9220	9770													
1625	2070	2345	2610	2945	3285	3555	3825	4105	4385															
1805	2300	2605	2900	3270	3650	3950	4250	4565	**4875**															
2150	2735	3100	3450	3890	4345	4705	5055	5430	5800															
2380	2980	3365	3745	4100	4560	5030	5415	5775	6140	6520	6905													
3105	3785	4240	4690	5095	5515	5935	6475	6975	7455	7880	8305	8710	9150	9585	9795									

7	12	14	17	20	23	26	29	32	35	38	41	43	46	49	51	52	54	58	61	64	67	72	75	84
0,5	0,8	1,0	1,2	1,4	1,6	1,8	2,0	2,2	2,4	2,6	2,8	3,0	3,2	3,4	3,5	3,6	3,7	4,0	4,2	4,4	4,6	5,0	5,2	5,8
2300	2925	3320	3715	4170	4635	5020	5400	5805	6210															
2555	3250	3690	4125	4635	5150	5580	6000	6450	**6900**															
3365	4210	4760	5290	5830	6455	7095	7640	8150	8675	9220	9770													
1625	2070	2345	2610	2945	3285	3555	3825	4105	4385															
1805	2300	2605	2900	3270	3650	3950	4250	4565	**4875**															
2150	2735	3100	3450	3890	4345	4705	5055	5430	5800															
2380	2980	3365	3745	4100	4560	5030	5415	5775	6140	6520	6905													
3105	3785	4240	4690	5095	5515	5935	6475	6975	7455	7880	8305	8710	9150	9585	9795									

7	12	14	17	20	23	26	29	32	35	38	41	43	46	49	51	52	54	58	61	64	67	72	75	84
0,5	0,8	1,0	1,2	1,4	1,6	1,8	2,0	2,2	2,4	2,6	2,8	3,0	3,2	3,4	3,5	3,6	3,7	4,0	4,2	4,4	4,6	5,0	5,2	5,8
2915	3715	4240	4770	5310	5850	6305	6750																	
3240	4125	4715	5300	5900	6500	7005	**7500**																	
4270	5345	6060	6775	7490	8225	9855	9620	10210	10500															
2050	2610	2990	3375	3765	4165	4470	4770																	
2280	2900	3325	3750	4185	4625	4970	**5300**																	
2710	3450	3955	4465	4980	5505	5915	6305																	
3000	3755	4270	4780	5300	5835	6375	6830	7230	7420															
3915	4770	5345	5915	6505	7090	7675	8285	8880	9190	9410	9910	10400	10600											

7	12	14	17	20	23	26	29	32	35	38	41	43	46	49	51	52	54	58	61	64	67	72	75	84
0,5	0,8	1,0	1,2	1,4	1,6	1,8	2,0	2,2	2,4	2,6	2,8	3,0	3,2	3,4	3,5	3,6	3,7	4,0	4,2	4,4	4,6	5,0	5,2	5,8
2510	3195	3675	4165	4605	5040	5450	5850	6300	6750															
2790	3550	4085	4625	5115	5600	6055	6500	7000	**7500**															
3675	4600	5235	5890	6535	7130	7715	8300	8835	9405	10015	10620													
1770	2250	2585	2925	3260	3600	3885	4160	4465	4770															
1965	2500	2875	3250	3625	4000	4315	4625	4965	**5300**															
2335	2975	3420	3865	4310	4760	5135	5505	5905	6305															
2585	3240	3685	4130	4595	5050	5510	5920	6295	6680	7090	7505													
3375	4115	4605	5100	5620	6135	6650	7170	7685	8155	8610	9055	9480	9950	10425	10650									

SIZE	LI/SS	New tire		Tire in service		SLR	RC	Rim	Speed	PRESSURE
		SW mm +/- 1,5%	OD mm +/- 1,5%	SW max mm	OD max mm	mm +/- 2%	mm +/- 2,5%		Km/h	psi / bar / MAX. LOAD kg
800/45-30.5 TL T423	178A8	800	1500	840	1536	660	4420	AG28.00	Free Rolling	
									50	
									40	
									10	
	166A8					680	4460		Driving wheel	
									50	
									40	
									25	
									10	
									10 C	

SIZE	LI/SS	New tire		Tire in service		SLR	RC	Rim	Speed	PRESSURE
		SW mm +/- 1,5%	OD mm +/- 1,5%	SW max mm	OD max mm	mm +/- 2%	mm +/- 2,5%		Km/h	psi / bar / MAX. LOAD kg
850/50-30.5 TL T404	179A8	850	1650	920	1684	691	4840	AG28.00	Free Rolling	
									50	
									40	
									10	
	167A8					723	4880		Driving wheel	
									50	
									40	
									25	
									10	
									10 C	

7	12	14	17	20	23	26	29	32	35	38	41	43	46	49	51	52	54	58	61	64	67	72	75	84
0,5	0,8	1,0	1,2	1,4	1,6	1,8	2,0	2,2	2,4	2,6	2,8	3,0	3,2	3,4	3,5	3,6	3,7	4,0	4,2	4,4	4,6	5,0	5,2	5,8
2510	3195	3675	4165	4605	5040	5450	5850	6300	6750															
2790	3550	4085	4625	5115	5600	6055	6500	7000	**7500**															
3675	4600	5235	5890	6535	7130	7715	8300	8835	9405	10015	10620													
1770	2250	2585	2925	3260	3600	3885	4160	4465	4770															
1965	2500	2875	3250	3625	4000	4315	4625	4965	**5300**															
2335	2975	3420	3865	4310	4760	5135	5505	5905	6305															
2585	3240	3685	4130	4595	5050	5510	5920	6295	6680	7090	7505													
3375	4115	4605	5100	5620	6135	6650	7170	7685	8155	8610	9055	9480	9950	10425	10650									

7	12	14	17	20	23	26	29	32	33	35	38	41	42	43	46	49	51	52	54	58	61	64	67	72	75	84
0,5	0,8	1,0	1,2	1,4	1,6	1,8	2,0	2,2	2,3	2,4	2,6	2,8	2,9	3,0	3,2	3,4	3,5	3,6	3,7	4,0	4,2	4,4	4,6	5,0	5,2	5,8
3005	3825	4425	5040	5540	6030	6510	6975																			
3340	4250	4915	5600	6155	6700	7230	**7750**																			
4395	5505	6285	7115	7915	8580	9230	9920	10545	10850																	
2120	2700	3145	3600	3945	4275	4595	4905																			
2355	3000	3490	4000	4380	4750	5105	**5450**																			
2805	3570	4155	4760	5215	5655	6075	6485																			
3105	3885	4450	5020	5655	6105	6545	7020	7430	7630																	
4050	4935	5525	6120	6835	7505	8185	8670	9210	9440	9670	10185	10690	10900													

For technical notes about pressure tables please refer to page 244.

T421 T423 T428 T440

Agricultural Multi Purpose Tires.
Low ground pressure tires for field and road. The cord material and rubber compound allow the tire to be used at speeds up to 70 Km/h as well as in heavy duty applications.

We recommend this tire for machines and implements with a high degree of road service.

SIZE	New tire		Tire in service		SLR	RC	SRI	Rim	Type	Speed	PRESSURE
	SW mm	OD mm	SW max mm	OD max mm	mm	mm				Km/h	psi / bar / MAX. LOAD kg
620/50B22.5 160D **T423**	625	1170	675	1235	535	3555	555	AG20.00	TL	70	
										65	
										40	
										10	
										0	

SIZE	New tire		Tire in service		SLR	RC	SRI	Rim	Type	Speed	PRESSURE
	SW mm	OD mm	SW max mm	OD max mm	mm	mm				Km/h	psi / bar / MAX. LOAD kg
650/45B22.5 160D **T440**	650	1160	697	1197	533	3505	550	AG20.00	TL	70	
										65	
										40	
										10	
										0	

SIZE	New tire		Tire in service		SLR	RC	SRI	Rim	Type	Speed	PRESSURE
	SW mm	OD mm	SW max mm	OD max mm	mm	mm				Km/h	psi / bar / MAX. LOAD kg
710/40B22.5 161D **T423**	720	1165	774	1180	535	3554	535	AG24.00	TL	70	
										65	
										40	
										10	
										0	

SIZE		
620/50B22.5	160D	T423
650/45B22.5	160D	T440
710/40B22.5	161D	T423
620/55B26.5	166D	T421

SIZE		
650/55B30.5	168D	T428
750/50B30.5	173D	T428
850/45B30.5	176D	T423

14 1,0	17 1,2	20 1,4	23 1,6	26 1,8	29 2,0	32 2,2	35 2,4	38 2,6	41 2,8	43 3,0	46 3,2	49 3,4	52 3,6	55 3,8	58 4,0	62 4,3	67 4,6
1690	1875	2045	2210	2350	2480	2670	2865	3050	3230	3325	3415	3635	3870	3990	4095		
1855	2060	2245	2430	2580	2725	2935	3150	3350	3550	3655	3750	3995	4250	4385	**4500**		
2525	2800	3055	3305	3510	3705	3995	4285	4555	4830	4970	5100	5435	5780	5960	6120		
3100	3420	3740	4030	4310	4585	4800	5070	5410	5730	6045	6360	6505	6720	6980	7385	7840	8120
4305	4750	5195	5595	5985	6365	6670	7045	7510	7960	8395	8830	9030	9330	9695	10255	10885	11280

14 1,0	17 1,2	20 1,4	23 1,6	26 1,8	29 2,0	32 2,2	35 2,4	38 2,6	41 2,8	43 3,0	46 3,2	49 3,4	52 3,6	55 3,8	58 4,0	62 4,3	67 4,6
1640	1820	1985	2150	2315	2480	2640	2800	2970	3140	3280	3415	3585	3755	3925	4095		
1800	2000	2180	2360	2545	2725	2900	3075	3265	3450	3600	3750	3935	4125	4310	**4500**		
2450	2720	2970	3210	3460	3705	3945	4180	4440	4690	4900	5100	5355	5610	5865	6120		
3005	3320	3630	3910	4185	4485	4765	5040	5310	5595	5890	6180	6410	6670	6925	7220	7660	8100
4175	4610	5045	5435	5815	6225	6620	7000	7375	7770	8180	8585	8900	9265	9620	10025	10640	11250

14 1,0	17 1,2	20 1,4	23 1,6	26 1,8	29 2,0	32 2,2	35 2,4	38 2,6	41 2,8	43 3,0	46 3,2	49 3,4	52 3,6	55 3,8	58 4,0	62 4,3	67 4,6
1690	1875	2075	2275	2415	2550	2710	2865	3050	3230	3380	3525	3695	3870	4040	4210		
1855	2060	2280	2500	2655	2800	2975	3150	3350	3550	3715	3875	4065	4250	4440	**4625**		
2525	2800	3100	3400	3610	3810	4045	4285	4555	4830	5050	5270	5525	5780	6035	6290		
3100	3420	3740	4085	4435	4715	4935	5175	5445	5730	6045	6360	6610	6885	7150	7445	7885	8325
4305	4750	5195	5675	6160	6545	6855	7190	7560	7960	8395	8835	9180	9565	9935	10340	10955	11565

SIZE	New tire		Tire in service		SLR	RC	SRI	Rim	Type	Speed	PRESSURE
	SW	OD	SW	OD							psi
	mm	mm	max mm	max mm	mm	mm				Km/h	bar
											MAX. LOAD kg
620/55B26.5 166D **T421**	630	1360	675	1403	620	4100	635	AG20.00	TL	70	
										65	
										40	
										10	
										0	

SIZE	New tire		Tire in service		SLR	RC	SRI	Rim	Type	Speed	PRESSURE
	SW	OD	SW	OD							psi
	mm	mm	max mm	max mm	mm	mm				Km/h	bar
											MAX. LOAD kg
650/55B30.5 168D **T428**	640	1490	697	1540	675	4100	700	AG20.00	TL	70	
										65	
										40	
										10	
										0	

SIZE	New tire		Tire in service		SLR	RC	SRI	Rim	Type	Speed	PRESSURE
	SW	OD	SW	OD							psi
	mm	mm	max mm	max mm	mm	mm				Km/h	bar
											MAX. LOAD kg
750/50B30.5 173D **T428**	750	1530	804	1577	690	4605	715	AG24.00	TL	70	
										65	
										40	
										10	
										0	

SIZE	New tire		Tire in service		SLR	RC	SRI	Rim	Type	Speed	PRESSURE
	SW	OD	SW	OD							psi
	mm	mm	max mm	max mm	mm	mm				Km/h	bar
											MAX. LOAD kg
850/45B30.5 176D **T423**	830	1530	921	1593	690	4635	725	AG28.00	TL	70	
										65	
										40	
										10	
										0	

According to availability

14	17	20	23	26	29	32	35	38	41	43	46	49	52	55	58	62	67
1,0	1,2	1,4	1,6	1,8	2,0	2,2	2,4	2,6	2,8	3,0	3,2	3,4	3,6	3,8	4,0	4,3	4,6
1940	2150	2390	2640	2805	2960	3140	3320	3535	3755	3925	4095	4265	4435	4630	4825		
2130	2360	2625	2900	3080	3250	3450	3650	3885	4125	4315	4500	4690	4875	5090	**5300**		
2900	3210	3575	3945	4190	4420	4695	4965	5285	5610	5870	6120	6375	6630	6920	7210		
3565	3920	4285	4710	5145	5470	5725	6005	6315	6640	7015	7390	7675	7995	8280	8565	9045	9540
4950	5445	5950	6540	7145	7595	7955	8340	8765	9225	9745	10265	10665	11105	11500	11895	12565	13250

14	17	20	23	26	29	32	35	38	41	43	46	49	52	55	58	62	67
1,0	1,2	1,4	1,6	1,8	2,0	2,2	2,4	2,6	2,8	3,0	3,2	3,4	3,6	3,8	4,0	4,3	4,6
2230	2480	2720	2960	3145	3320	3595	3870	4095	4325	4505	4685	4895	5095				
2455	2725	2990	3250	3455	3650	3950	4250	4500	4750	4955	5150	5375	**5600**				
3335	3705	4065	4420	4700	4965	5370	5780	6120	6460	6735	7005	7315	7615				
4095	4520	4950	5360	5765	6130	6430	6805	7285	7735	8125	8510	8815	9165	9485	9830		
5685	6280	6870	7440	8010	8515	8930	9455	10115	10740	11280	11815	12240	12730	13175	13650		

14	17	20	23	26	29	32	35	38	41	43	46	49	52	55	58	62	67
1,0	1,2	1,4	1,6	1,8	2,0	2,2	2,4	2,6	2,8	3,0	3,2	3,4	3,6	3,8	4,0	4,3	4,6
2570	2865	3140	3415	3645	3870	4150	4435	4700	4960	5125	5280	5595	5915				
2825	3150	3450	3750	4005	4250	4560	4875	5165	5450	5630	5800	6145	**6500**				
3840	4285	4695	5100	5445	5780	6205	6630	7020	7410	7660	7890	8360	8840				
4705	5215	5720	6190	6655	7090	7465	7895	8385	8870	9315	9760	10020	10370	10765	11325		
6535	7245	7945	8595	9240	9850	10370	10965	11645	12320	12940	13560	13915	14405	14950	15730		

14	17	20	23	26	29	32	35	38	41	43	46	49	52	55	58	62	67
1,0	1,2	1,4	1,6	1,8	2,0	2,2	2,4	2,6	2,8	3,0	3,2	3,4	3,6	3,8	4,0	4,3	4,6
2845	3140	3445	3755	4040	4325	4575	4825	5140	5460	5690	5915	6190	6460				
3130	3450	3790	4125	4440	4750	5030	5300	5650	6000	6255	6500	6800	**7100**				
4255	4690	5150	5610	6040	6460	6840	7210	7685	8160	8505	8840	9250	9655				
5240	5745	6265	6790	7315	7830	8310	8765	9180	9645	10195	10745	11130	11570	11985	12450		
7280	7980	8700	9430	10160	10875	11545	12170	12750	13395	14160	14925	15455	16070	16645	17290		

For technical notes about pressure tables please refer to page 244.

T404

Specially designed for grass and sensitive ground conditions.
Its soft carcass design, considerate tread pattern and low ground pressure all contribute to no track formation and very little soil compaction.
This tire is also flexible for both soft and hard surfaces.

SIZE	New tire		Tire in service		SLR mm	RC mm	Rim	Type	Speed Km/h	PRESSURE psi / bar / MAX. LOAD kg
	SW mm	OD mm	SW mm	OD mm						
400/55-17.5 108A8 **T404**	400	870	420	892	410	2640	AG11.75	TL	50	
									40	
									25	
									10	

According to availability

SIZE	New tire		Tire in service		SLR mm	RC mm	Rim	Type	Speed Km/h	PRESSURE psi / bar / MAX. LOAD kg
	SW mm	OD mm	SW mm	OD mm						
400/55-22.5 111A8 **T404**	400	1000	420	1021	455	3000	AG11.75	TL	50	
									40	
									25	
									10	

SIZE	New tire		Tire in service		SLR mm	RC mm	Rim	Type	Speed Km/h	PRESSURE psi / bar / MAX. LOAD kg
	SW mm	OD mm	SW mm	OD mm						
600/60-30.5 142A8 **T404**	610	1500	630	1536	660	4360	AG20.00	TL	50	
									40	
									25	
									10	

SIZE		
400/55-17.5	108A8	T404
400/55-22.5	111A8	T404
600/60-30.5	142A8	T404

6	7	9	10	12	13	14	16	17	19	20
0,4	0,5	0,6	0,7	0,8	0,9	1,0	1,1	1,2	1,3	1,4
505	555	605	655	705	755	805	855	900		
560	615	670	725	780	835	890	945	**1000**		
670	735	800	865	930	995	1060	1125	1190		
710	775	845	915	985	1055	1125	1195	1260	1330	1400

6	7	9	10	12	13	14	16	17	19	20
0,4	0,5	0,6	0,7	0,8	0,9	1,0	1,1	1,2	1,3	1,4
550	605	660	715	770	820	875	930	985		
615	675	735	795	855	915	975	1035	**1090**		
730	800	870	945	1015	1085	1155	1230	1300		
770	845	925	1000	1075	1150	1225	1300	1375	1450	1530

6	7	9	10	12	13	14	16	17	19	20
0,4	0,5	0,6	0,7	0,8	0,9	1,0	1,1	1,2	1,3	1,4
1340	1470	1600	1730	1865	1995	2125	2255	2385		
1485	1630	1780	1925	2070	2215	2360	2505	**2650**		
1770	1940	2115	2290	2460	2635	2810	2985	3155		
1870	2055	2240	2425	2605	2790	2975	3160	3340	3525	3710

For technical notes about pressure tables please refer to page 244.

AW305

AF302

T452

T306

AW309 Flotation

The Implement tires are metric size marked, tubeless, and Load/Speed index rated, which gives a higher load capacity and higher permitted speed (40 - 50 kph) than previous tires.
This line is recommended for trailers and other agricultural Implements such as spreaders, balers, ploughs, drills etc.

The tread design and the rounded shoulders offer soft ground contact with minimal damage when turning, plus a low rolling resistance on road transport.
Available in a wide range of sizes to cover all normal requirements.

SIZE	LI/SS	New tire		Tire in service		SLR	RC	Rim	Type/Tube	Speed
		SW mm	OD mm	SW max mm	OD max mm	mm	mm			Km/h
	101A8	198	684	213	711	307	2041	4.25	TL	Free Rolling
									7.00-12	50
200/95-12										**40**
										10
AF302	89A8					316	2055			Driving wheel
										50
										40
										10

SIZE		
200/95-12	101A8	AF302
260/90-13	121A8	AF302
260/70-15.3	116A8	AW305
260/70-15.3	126A8	AW305
260/70-15.3	131A8	AW305
300/80-15.3	123A8	T452
300/80-15.3	141A8	T452
300/80-15.3	132A8	AW305
300/80-15.3	141A8	AW305
320/80-15.3	145A8	AW305
180/90-16	100A8	AF302
190/90-16	108A8	AF302
200/90-16	111A8	AF302
210/95-16	120A8	AF302
260/70-16	134A8	AW305

SIZE		
340/55-16	140A8	AW305
340/55-16	140A8	AW309
360/65-16	148A8	AW305
360/70-16	137A8	AW305
380/55-17	138A8	AW305
420/55-17	143A8	T452
480/45-17	146A8	AW305
500/50-17	149A8	AW309
520/50-17	159A8	T306

SIZE		Inches Sizes
10.0/80-12	8 PR	AW305
10.0/80-12	10 PR	AW305

PRESSURE																								
psi	7	12	14	17	20	23	26	29	32	35	36	38	41	42	43	46	49	51	52	54	55	58	59
bar	0,5	0,8	1,0	1,2	1,4	1,6	1,8	2,0	2,2	2,4	2,5	2,6	2,8	2,9	3,0	3,2	3,4	3,5	3,6	3,7	3,8	4,0	4,1
MAX. LOAD kg																							
	285	360	410	465	515	565	610	655	700	745													
	315	400	455	515	570	630	680	730	780	**825**													
	415	520	590	660	730	800	870	935	990	1050	1105	1170											
	200	250	290	330	365	405	435	465	495	520													
	220	280	320	365	405	450	485	515	550	**580**													
	290	365	415	465	515	570	620	665	700	740	780	820											

SIZE	LI/SS	New tire		Tire in service		SLR	RC	Rim	Type/Tube	Speed
		SW mm	OD mm	SW max mm	OD max mm	mm	mm			Km/h
	121A8	262	795	279	831	350	2378	6.00F	TL	Free Rolling
									9.00-13	50
										40
260/90-13										10
AF302	109A8					362	2394			Driving wheel
										50
										40
										10

SIZE	LI/SS	New tire		Tire in service		SLR	RC	Rim	Type/Tube	Speed
		SW mm	OD mm	SW max mm	OD max mm	mm	mm			Km/h
	116A8	274	760	279	778	332	2265	9.00	TL	Free Rolling
									10.0/75-15.3	50
										40
260/70-15.3										10
AW305	104A8					354	2309			Driving wheel
										50
										40
										10

SIZE	LI/SS	New tire		Tire in service		SLR	RC	Rim	Type/Tube	Speed
		SW mm	OD mm	SW max mm	OD max mm	mm	mm			Km/h
	126A8	274	760	279	778	332	2265	9.00	TL	Free Rolling
									10.0/75-15.3	50
										40
260/70-15.3										10
AW305	114A8					354	2309			Driving wheel
										50
										40
										10

SIZE	LI/SS	New tire		Tire in service		SLR	RC	Rim	Type/Tube	Speed
		SW mm	OD mm	SW max mm	OD max mm	mm	mm			Km/h
	131A8	274	760	279	778	330	2280	9.00	TL	Free Rolling
									10.0/75-15.3	50
										40
260/70-15.3										10
AW305	119A8					354	2309			Driving wheel
										50
										40
										10

PRESSURE																						
psi	7	12	14	17	20	23	26	29	32	35	38	41	42	43	46	49	51	52	54	55	58	59
bar	0,5	0,8	1,0	1,2	1,4	1,6	1,8	2,0	2,2	2,4	2,6	2,8	2,9	3,0	3,2	3,4	3,5	3,6	3,7	3,8	4,0	4,1
MAX. LOAD kg																						
	490	620	715	810	895	980	1070	1155	1230	1305												
	540	690	795	900	995	1090	1185	1285	1370	**1450**												
	715	895	1020	1145	1270	1385	1500	1620	1740	1850	1945	2055										
	345	440	500	565	630	695	765	835	880	925												
	385	485	560	630	700	775	850	925	980	**1030**												
	505	630	715	805	890	980	1065	1155	1250	1325	1390	1460										

PRESSURE																						
psi	7	12	14	17	20	23	26	29	32	35	38	41	42	43	46	49	51	52	54	55	58	59
bar	0,5	0,8	1,0	1,2	1,4	1,6	1,8	2,0	2,2	2,4	2,6	2,8	2,9	3,0	3,2	3,4	3,5	3,6	3,7	3,8	4,0	4,1
MAX. LOAD kg																						
	425	540	620	700	765	835	905	980	1055	1125												
	470	600	685	775	850	925	1010	1090	1170	**1250**												
	620	775	880	990	1095	1185	1275	1375	1475	1575	1670	1770										
	300	380	435	490	540	585	640	700	755	810												
	335	425	485	545	600	650	710	775	835	**900**												
	440	550	625	695	770	835	895	970	1045	1125	1200	1275										

PRESSURE																						
psi	7	12	14	17	20	23	26	29	32	35	38	41	43	46	49	52	55	58	59			
bar	0,5	0,8	1,0	1,2	1,4	1,6	1,8	2,0	2,2	2,4	2,6	2,8	3,0	3,2	3,4	3,6	3,8	4,0	4,1			
MAX. LOAD kg																						
	425	540	620	700	765	835	905	980	1055	1125	1195	1260	1305	1350	1440	1530						
	470	600	685	775	850	925	1010	1090	1170	1250	1325	1400	1450	1500	1600	**1700**						
	620	775	880	990	1095	1185	1275	1375	1475	1575	1670	1770	1860	1950	2010	2085	2170	2295	2360			
	300	380	435	490	540	585	640	700	755	810	855	900	930	955	1010	1060						
	335	425	485	545	600	650	710	775	835	900	950	1000	1030	1060	1120	**1180**						
	440	550	625	695	770	835	895	970	1045	1125	1200	1275	1335	1395	1425	1475	1530	1600	1640			

PRESSURE																						
psi	7	12	17	23	29	35	38	41	43	46	49	52	55	58	67	72	78	84				
bar	0,5	0,8	1,2	1,6	2,0	2,4	2,6	2,8	3,0	3,2	3,4	3,6	3,8	4,0	4,6	5,0	5,4	5,8				
MAX. LOAD kg																						
	425	540	700	835	980	1125	1195	1260	1305	1350	1440	1530	1600	1665	1730	1755						
	470	600	775	925	1090	1250	1325	1400	1450	1500	1600	1700	1775	1850	1925	**1950**						
	620	775	990	1185	1375	1575	1670	1770	1860	1950	2010	2085	2170	2295	2590	2635	2700	2750				
	300	380	490	585	700	810	855	900	930	955	1010	1060	1110	1155	1205	1225						
	335	425	545	650	775	900	950	1000	1030	1060	1120	1180	1230	1285	1340	**1360**						
	440	550	695	835	970	1125	1200	1275	1335	1395	1425	1475	1530	1600	1800	1835	1880	1920				

SIZE	LI/SS	New tire		Tire in service		SLR	RC	Rim	Type/Tube	Speed
		SW mm	OD mm	SW max mm	OD max mm	mm	mm			Km/h
	123A8	305	900	319	902	390	2685	9.00	TL	Free Rolling
										50
										40
300/80-15.3										10
	111A8					403	2691			Driving wheel
										50
T452										**40**
										25
										10
										10 C

SIZE	LI/SS	New tire		Tire in service		SLR	RC	Rim	Type/Tube	Speed
		SW mm	OD mm	SW max mm	OD max mm	mm	mm			Km/h
	141A8	300	890	310	902	383	2601	9.00	TL	Free Rolling
										50
										40
300/80-15.3										10
	129A8									Driving wheel
										50
T452										**40**
										25
										10
										10 C

According to availability

SIZE	LI/SS	New tire		Tire in service		SLR	RC	Rim	Type/Tube	Speed
		SW mm	OD mm	SW max mm	OD max mm	mm	mm			Km/h
	132A8	296	870	319	902	372	2595	9.00	TL	Free Rolling
									11.5/80-15.3	50
										40
300/80-15.3										10
	120A8					407	2642			Driving wheel
AW305										50
										40
										10

SIZE	LI/SS	New tire		Tire in service		SLR	RC	Rim	Type/Tube	Speed
		SW mm	OD mm	SW max mm	OD max mm	mm	mm			Km/h
	141A8	300	870	319	902	380	2610	9.00	TL	Free Rolling
									11.5/80-15.3	50
										40
300/80-15.3										10
	129A8					407	2642			Driving wheel
AW305										50
										40
										10

PRESSURE																								
psi	7	12	14	17	20	23	26	29	32	33	35	38	41	42	43	46	49	51	52	54	55	58	59	67
bar	0,5	0,8	1,0	1,2	1,4	1,6	1,8	2,0	2,2	2,3	2,4	2,6	2,8	2,9	3,0	3,2	3,4	3,5	3,6	3,7	3,8	4,0	4,1	4,6
MAX. LOAD kg																								
	600	765	875	980	1085	1190	1290	1395																
	670	850	970	1090	1205	1320	1435	**1550**																
	880	1100	1250	1395	1540	1680	1820	1960	2100	2170														
	425	540	620	695	775	855	920	980																
	470	600	685	775	860	950	1020	**1090**																
	560	715	820	920	1025	1130	1215	1295																
	620	775	885	990	1095	1200	1310	1405	1485	1525														
	810	985	1105	1225	1345	1465	1585	1705	1825	1885	1935	2035	2140	2180										

PRESSURE																								
psi	7	12	14	17	20	23	26	29	32	35	38	41	43	46	49	52	55	58	61	67	72	75	84	
bar	0,5	0,8	1,0	1,2	1,4	1,6	1,8	2,0	2,2	2,4	2,6	2,8	3,0	3,2	3,4	3,6	3,8	4,0	4,2	4,6	5,0	5,2	5,8	
MAX. LOAD kg																								
	600	765	875	980	1085	1190	1290	1395	1485	1575	1690	1800	1855	1910	2015	2125	2220	2320						
	670	850	970	1090	1205	1320	1435	1550	1650	1750	1875	2000	2065	2120	2240	2360	2470	**2575**						
	880	1100	1250	1395	1540	1680	1820	1960	2100	2230	2350	2480	2630	2785	2855	2955	3055	3205	3340	3605				
	425	540	620	695	775	855	920	980	1040	1095	1175	1260	1305	1350	1440	1530	1600	1665						
	470	600	685	775	860	950	1020	1090	1155	1215	1305	1400	1450	1500	1600	1700	1775	**1850**						
	560	715	820	920	1025	1130	1215	1295	1375	1445	1555	1665	1725	1785	1905	2025	2110	2200						
	620	775	885	990	1095	1200	1310	1405	1485	1565	1635	1720	1835	1950	2010	2085	2170	2295	2405	2590				
	810	985	1105	1225	1345	1465	1585	1705	1825	1935	2035	2140	2220	2315	2405	2510	2630	2765	2880	2980	3255	3390	3700	

PRESSURE																								
psi	7	12	14	17	20	23	26	29	32	35	38	41	43	46	49	51	52	54	55	58	59	67		
bar	0,5	0,8	1,0	1,2	1,4	1,6	1,8	2,0	2,2	2,4	2,6	2,8	3,0	3,2	3,4	3,5	3,6	3,7	3,8	4,0	4,1	4,6		
MAX. LOAD kg																								
	600	765	875	980	1085	1190	1290	1395	1485	1575	1690	1800												
	670	850	970	1090	1205	1320	1435	1550	1650	1750	1875	**2000**												
	880	1100	1250	1395	1540	1680	1820	1960	2100	2230	2350	2480	2630	2785										
	425	540	620	695	775	855	920	980	1040	1095	1175	1260												
	470	600	685	775	860	950	1020	1090	1155	1215	1305	**1400**												
	620	775	885	990	1095	1200	1310	1405	1485	1565	1635	1720	1835	1950										

PRESSURE																						
psi	7	12	17	23	26	29	32	35	38	41	43	46	49	52	55	58	61	64	67			
bar	0,5	0,8	1,2	1,6	1,8	2,0	2,2	2,4	2,6	2,8	3,0	3,2	3,4	3,6	3,8	4,0	4,2	4,4	4,6			
MAX. LOAD kg																						
	600	765	980	1190	1290	1395	1485	1575	1690	1800	1855	1910	2015	2125	2220	2320						
	670	850	1090	1320	1435	1550	1650	1750	1875	2000	2065	2120	2240	2360	2470	**2575**						
	880	1100	1395	1680	1820	1960	2100	2230	2350	2480	2630	2785	2855	2955	3055	3205	3340	3475	3605			
	425	540	695	855	920	980	1040	1095	1175	1260	1305	1350	1440	1530	1600	1665						
	470	600	775	950	1020	1090	1155	1215	1305	1400	1450	1500	1600	1700	1775	**1850**						
	620	775	990	1200	1310	1405	1485	1565	1635	1720	1835	1950	2010	2085	2170	2295	2405	2500	2590			

SIZE	LI/SS	New tire		Tire in service		SLR	RC	Rim	Type/Tube	Speed
		SW mm	OD mm	SW max mm	OD max mm	mm	mm			Km/h
	145A8	322	897	345	936	396	2691	9.00	TL	Free Rolling
									12.5/80-15.3	50
										40
320/80-15.3										10
	133A8					424	2702			Driving wheel
AW305										50
										40
										10

SIZE	LI/SS	New tire		Tire in service		SLR	RC	Rim	Type/Tube	Speed
		SW mm	OD mm	SW max mm	OD max mm	mm	mm			Km/h
	100A8	175	728	192	753	307	2162	4.00E	TL	Free Rolling
									6.00-16	50
										40
180/90-16										10
	88A8					337	2194			Driving wheel
AF302										50
										40
										10

SIZE	LI/SS	New tire		Tire in service		SLR	RC	Rim	Type/Tube	Speed
		SW mm	OD mm	SW max mm	OD max mm	mm	mm			Km/h
	108A8	192	746	205	772	331	2223	4.50E	TL	Free Rolling
									6.50/7.00-16	50
										40
190/90-16										10
	96A8					343	2245			Driving wheel
AF302										50
										40
										10

SIZE	LI/SS	New tire		Tire in service		SLR	RC	Rim	Type/Tube	Speed
		SW mm	OD mm	SW max mm	OD max mm	mm	mm			Km/h
	111A8	204	764	213	792	338	2227	5.00F	TL	Free Rolling
									6.50/7.00-16	50
										40
200/90-16										10
	99A8					354	2305			Driving wheel
AF302										50
										40
										10

SIZE	LI/SS	New tire		Tire in service		SLR	RC	Rim	Type/Tube	Speed
		SW mm	OD mm	SW max mm	OD max mm	mm	mm			Km/h
	120A8	218	802	231	833	347	2392	5.50F	TL	Free Rolling
									7.50-16	50
										40
210/95-16										10
	108A8					373	2420			Driving wheel
AF302										50
										40
										10

PRESSURE																						
psi	7	12	17	23	26	29	32	35	38	41	43	46	49	52	55	58	61	64	67			
bar	0,5	0,8	1,2	1,6	1,8	2,0	2,2	2,4	2,6	2,8	3,0	3,2	3,4	3,6	3,8	4,0	4,2	4,4	4,6			
MAX. LOAD kg																						
	655	835	1060	1305	1420	1530	1645	1755	1885	2015	2075	2125	2255	2385	2500	2610						
	725	925	1180	1450	1575	1700	1825	1950	2095	2240	2305	2360	2505	2650	2775	**2900**						
	955	1200	1510	1830	2000	2155	2305	2455	2605	2760	2940	3120	3185	3295	3410	3590	3755	3910	4060			
	460	585	765	925	995	1060	1145	1225	1330	1440	1485	1530	1620	1710	1785	1855						
	510	650	850	1030	1105	1180	1270	1360	1480	1600	1650	1700	1800	1900	1980	**2060**						
	675	840	1075	1310	1420	1520	1610	1705	1815	1925	2075	2230	2285	2365	2450	2575	2685	2790	2885			

PRESSURE																						
psi	7	12	14	17	20	23	26	29	32	33	38	41	42	43	46	49	51	52	54	55	58	59	67
bar	0,5	0,8	1,0	1,2	1,4	1,6	1,8	2,0	2,2	2,3	2,6	2,8	2,9	3,0	3,2	3,4	3,5	3,6	3,7	3,8	4,0	4,1	4,6
MAX. LOAD kg																							
	310	395	450	505	565	620	670	720															
	345	435	500	560	625	690	745	**800**															
	450	565	640	715	790	870	950	1025	1090	1120													
	215	275	320	360	400	440	470	505															
	240	305	355	400	445	485	525	**560**															
	320	400	455	510	565	620	670	720	765	785													

PRESSURE																							
psi	7	12	14	17	20	23	26	29	32	35	38	41	42	43	46	49	51	52	54	55	58	59	67
bar	0,5	0,8	1,0	1,2	1,4	1,6	1,8	2,0	2,2	2,4	2,6	2,8	2,9	3,0	3,2	3,4	3,5	3,6	3,7	3,8	4,0	4,1	4,6
MAX. LOAD kg																							
	335	430	490	555	615	675	730	790	845	900													
	375	475	545	615	685	750	815	875	940	**1000**													
	490	615	700	785	870	950	1035	1115	1190	1265	1340	1415											
	235	300	345	395	435	475	515	555	595	640													
	265	335	385	435	485	530	575	615	665	**710**													
	345	435	495	555	620	675	730	785	835	890	950	1005											

PRESSURE																							
psi	7	12	14	17	20	23	26	29	32	35	38	41	42	43	46	49	51	52	54	55	58	59	67
bar	0,5	0,8	1,0	1,2	1,4	1,6	1,8	2,0	2,2	2,4	2,6	2,8	2,9	3,0	3,2	3,4	3,5	3,6	3,7	3,8	4,0	4,1	4,6
MAX. LOAD kg																							
	365	465	535	605	660	720	790	855	920	980													
	405	515	590	670	735	800	875	950	1020	**1090**													
	535	665	760	855	945	1025	1100	1190	1285	1375	1455	1545											
	260	330	380	425	465	505	555	605	650	695													
	285	365	420	475	520	560	615	670	725	**775**													
	380	475	540	605	670	720	770	835	905	970	1035	1095											

PRESSURE																							
psi	7	12	14	17	20	23	26	29	32	35	38	41	43	46	49	51	52	54	55	58	59	67	
bar	0,5	0,8	1,0	1,2	1,4	1,6	1,8	2,0	2,2	2,4	2,6	2,8	3,0	3,2	3,4	3,5	3,6	3,7	3,8	4,0	4,1	4,6	
MAX. LOAD kg																							
	410	520	600	675	755	835	895	955	1025	1095	1175	1260											
	455	580	665	750	835	925	995	1060	1140	1215	1305	**1400**											
	600	750	855	960	1060	1165	1275	1365	1445	1530	1625	1720	1835	1950									
	290	370	425	475	530	585	630	675	730	785	845	900											
	325	410	470	530	590	650	700	750	810	875	935	**1000**											
	425	535	605	675	750	825	895	960	1020	1090	1165	1240	1315	1395									

SIZE	LI/SS	New tire		Tire in service		SLR	RC	Rim	Type/Tube	Speed Km/h
		SW mm	OD mm	SW max mm	OD max mm	mm	mm			
	134A8	265	776	279	796	336	2303	W8	TL	Free Rolling
									10.5/65-16	50
										40
260/70-16										10
	122A8					348	2328			Driving wheel
AW305										50
										40
										10

SIZE	LI/SS	New tire		Tire in service		SLR	RC	Rim	Type/Tube	Speed Km/h
		SW mm	OD mm	SW max mm	OD max mm	mm	mm			
	140A8	342	777	370	807	333	2331	11.00	TL	Free Rolling
									13.0/55-16	50
										40
340/55-16										10
	128A8					364	2340			Driving wheel
AW305										50
										40
										10

SIZE	LI/SS	New tire		Tire in service		SLR	RC	Rim	Type/Tube	Speed Km/h
		SW mm	OD mm	SW max mm	OD max mm	mm	mm			
	140A8	342	766	370	800	330	2295	11.00	TL	Free Rolling
										50
										40
340/55-16										10
	128A8					355	2305			Driving wheel
AW309										50
										40
										10

Reifengröße	LI/SS	Neureifen		Reifen im Betrieb		SLR	RC	Felge	Reifenart/ Schlauch	Geschwindigkeit Km/h
		SW mm	OD mm	SW max mm	OD max mm	mm	mm			
	148A8	362	880	386	907	377	2640	11.00	TL	Free Rolling
										50
										40
360/65-16										10
	136A8					396	2674			Driving wheel
AW305										50
										40
										10

PRESSURE																		
psi	7	12	17	23	29	35	41	46	52	58	61	64	67	70	72	79	84	
bar	0,5	0,8	1,2	1,6	2,0	2,4	2,8	3,2	3,6	4,0	4,2	4,4	4,6	4,8	5,0	5,4	5,8	
MAX. LOAD kg																		
	460	585	765	925	1060	1225	1395	1485	1665	1800	1830	1855	1875	1895	1910			
	510	650	850	1030	1180	1360	1550	1650	1850	2000	2035	2060	2085	2105	**2120**			
	675	840	1080	1310	1520	1705	1925	2160	2295	2505	2615	2710	2800	2830	2855	2930	2990	
	325	415	540	655	765	875	980	1035	1155	1260	1285	1305	1320	1335	1350			
	365	460	600	730	850	975	1090	1150	1285	1400	1425	1450	1470	1485	**1500**			
	480	600	765	925	1080	1230	1380	1520	1605	1740	1820	1890	1960	1985	2005	2065	2115	

PRESSURE																			
psi	7	12	17	23	26	29	32	35	38	41	43	46	49	52	55	58	61	64	67
bar	0,5	0,8	1,2	1,6	1,8	2,0	2,2	2,4	2,6	2,8	3,0	3,2	3,4	3,6	3,8	4,0	4,2	4,4	4,6
MAX. LOAD kg																			
	565	720	925	1125	1215	1305	1415	1530	1620	1710	1785	1855	1935	2015	2130	2250			
	630	800	1030	1250	1350	1450	1575	1700	1800	1900	1980	2060	2150	2240	2370	**2500**			
	830	1035	1315	1590	1720	1850	1970	2105	2260	2405	2530	2645	2740	2855	2950	3060	3190	3335	3500
	395	505	655	810	870	925	995	1060	1125	1190	1245	1305	1375	1440	1530	1620			
	440	560	730	900	965	1030	1105	1180	1250	1320	1385	1450	1525	1600	1700	**1800**			
	580	725	925	1135	1240	1330	1405	1490	1580	1670	1755	1840	1915	2000	2085	2175	2285	2395	2520

PRESSURE																			
psi	7	11	17	23	26	28	31	34	37	40	43	46	48	51	54	57	60	63	67
bar	0,5	0,8	1,2	1,6	1,8	2	2,2	2,4	2,6	2,8	3	3,2	3,4	3,6	3,8	4	4,2	4,4	4,6
MAX. LOAD kg																			
	565	720	925	1125	1215	1305	1415	1530	1620	1710	1785	1855	1935	2015	2130	2250			
	630	800	1030	1250	1350	1450	1575	1700	1800	1900	1980	2060	2150	2240	2370	**2500**			
	830	1035	1315	1590	1720	1850	1970	2105	2260	2405	2530	2645	2740	2855	2950	3060	3190	3335	3500
	395	505	655	810	870	925	995	1060	1125	1190	1245	1305	1375	1440	1530	1620			
	440	560	730	900	965	1030	1105	1180	1250	1320	1385	1450	1525	1600	1700	**1800**			
	580	725	925	1135	1240	1330	1405	1490	1580	1670	1755	1840	1915	2000	2085	2175	2285	2395	2520

PRESSURE																			
psi	7	12	17	23	26	29	32	35	38	41	43	46	49	52	55	58	61	64	67
bar	0,5	0,8	1,2	1,6	1,8	2,0	2,2	2,4	2,6	2,8	3,0	3,2	3,4	3,6	3,8	4,0	4,2	4,4	4,6
MAX. LOAD kg																			
	730	925	1190	1440	1555	1665	1785	1910	2045	2185	2255	2320	2460	2610	2725	2835			
	810	1030	1320	1600	1725	1850	1985	2120	2275	2430	2505	2575	2735	2900	3025	**3150**			
	1065	1335	1690	2035	2205	2370	2520	2670	2835	3005	3195	3385	3465	3585	3720	3925	4100	4260	4410
	515	655	855	1010	1085	1155	1255	1350	1460	1575	1620	1665	1760	1855	1935	2015			
	575	730	950	1120	1205	1285	1390	1500	1625	1750	1805	1850	1955	2060	2150	**2240**			
	755	945	1205	1445	1545	1655	1750	1865	1995	2125	2280	2435	2495	2580	2665	2795	2915	3030	3135

SIZE	LI/SS	New tire		Tire in service		SLR	RC	Rim	Type/Tube	Speed
		SW mm	OD mm	SW max mm	OD max mm	mm	mm			Km/h
	137A8	362	905	386	946	380	2697	11.00	TL	Free Rolling
									13.0/75-16	50
									14.0/65-16	**40**
360/70-16										10
	125A8					412	2730			Driving wheel
AW305										50
										40
										10

SIZE	LI/SS	New tire		Tire in service		SLR	RC	Rim	Type/Tube	Speed
		SW mm	OD mm	SW max mm	OD max mm	mm	mm			Km/h
	138A8	384	845	410	880	355	2521	13.00	TL	Free Rolling
									15.0/55-17	50
										40
380/55-17										10
	126A8					378	2550			Driving wheel
AW305										50
										40
										10

SIZE	LI/SS	New tire		Tire in service		SLR	RC	Rim	Type/Tube	Speed
		SW mm	OD mm	SW max mm	OD max mm	mm	mm			Km/h
	143A8	416	897	451	926	382	2606	13.00	TL	Free Rolling
										50
										40
420/55-17										10
	131A8									Driving wheel
T452										50
										40
										10

SIZE	LI/SS	New tire		Tire in service		SLR	RC	Rim	Type/Tube	Speed
		SW mm	OD mm	SW max mm	OD max mm	mm	mm			Km/h
	146A8	478	868	517	894	369	2582	16.00	TL	Free Rolling
									19.0/45-17	50
									500/50-17	**40**
480/45-17										10
	134A8					390	2590			Driving wheel
AW305										50
										40
										10

PRESSURE																						
psi	7	12	14	17	20	23	26	29	32	35	38	41	42	43	46	49	51	52	54	55	58	59
bar	0,5	0,8	1,0	1,2	1,4	1,6	1,8	2,0	2,2	2,4	2,6	2,8	2,9	3,0	3,2	3,4	3,5	3,6	3,7	3,8	4,0	4,1
MAX. LOAD kg																						
	770	980	1120	1260	1395	1530	1665	1800	1935	2070												
	855	1090	1245	1400	1550	1700	1850	2000	2150	**2300**												
	1130	1410	1600	1790	1980	2160	2340	2525	2710	2890	3075	3255										
	550	695	800	900	985	1060	1160	1260	1370	1485												
	610	775	885	1000	1090	1180	1290	1400	1525	**1650**												
	800	1005	1140	1275	1415	1520	1625	1760	1895	2035	2190	2335										

PRESSURE																						
psi	7	12	14	17	20	23	26	29	32	35	38	41	43	46	49	51	52	54	55	58	59	
bar	0,5	0,8	1,0	1,2	1,4	1,6	1,8	2,0	2,2	2,4	2,6	2,8	3,0	3,2	3,4	3,5	3,6	3,7	3,8	4,0	4,1	
MAX. LOAD kg																						
	690	880	1000	1125	1260	1395	1510	1620	1735	1855	1990	2125										
	765	975	1115	1250	1400	1550	1675	1800	1930	2060	2210	**2360**										
	1010	1265	1430	1600	1765	1950	2135	2295	2445	2600	2755	2915	3100	3285								
	490	620	715	810	895	980	1055	1125	1215	1305	1415	1530										
	540	690	795	900	995	1090	1170	1250	1350	1450	1575	**1700**										
	715	895	1020	1145	1275	1390	1500	1610	1705	1810	1935	2055	2210	2370								

PRESSURE						
psi	12	17	23	29	35	40
bar	0,8	1,2	1,6	2,0	2,4	2,8
MAX. LOAD kg						
	1030	1325	1620	1865	2160	1865
	1145	1470	1800	2070	2400	**2725**
	1600	2060	2520	2900	3355	2900
	735	950	1160	1335	1545	1755
	820	1055	1285	1480	1715	**1950**
	1145	1475	1800	2075	2400	2730

PRESSURE																			
psi	7	12	17	23	26	29	32	35	38	41	43	46	49	52	54	55	58	59	
bar	0,5	0,8	1,2	1,6	1,8	2,0	2,2	2,4	2,6	2,8	3,0	3,2	3,4	3,6	3,7	3,8	4,0	4,1	
MAX. LOAD kg																			
	835	1060	1350	1665	1790	1910	2075	2250	2385	2520	2615	2700							
	930	1180	1500	1850	1985	2120	2310	2500	2650	2800	2905	**3000**							
	1220	1530	1925	2335	2550	2735	2890	3085	3320	3540	3720	3900	4015	4165	4220				
	600	765	955	1155	1255	1350	1485	1620	1710	1800	1855	1910							
	670	850	1060	1285	1395	1500	1650	1800	1900	2000	2065	**2120**							
	880	1100	1375	1635	1770	1905	2035	2190	2380	2550	2670	2785	2855	2955	2980				

SIZE	LI/SS	New tire		Tire in service		SLR	RC	Rim	Type/Tube	Speed
		SW mm	OD mm	SW max mm	OD max mm	mm	mm			Km/h
	149A8	495	945	543	968	408	2766	16.00	TL	Free Rolling
										50
500/50-17										**40**
										10
AW309	137A8									Driving wheel
										50
										40
										10

SIZE	LI/SS	New tire		Tire in service		SLR	RC	Rim	Type/Tube	Speed
		SW mm	OD mm	SW max mm	OD max mm	mm	mm			Km/h
	159A8	516	952	557	988	404	2820	16.00	TL	Free Rolling
										50
520/50-17										**40**
										10
T306	147A8					421	2855			Driving wheel
										50
										40
										10

INCHES SIZES

SIZE	LI/SS	New tire		Tire in service		SLR	RC	Rim	Type/Tube	Speed
		SW mm	OD mm	SW max mm	OD max mm	mm	mm			Km/h
	8 PR	268	716	277	730	314	2138	9.00	TL	Free Rolling
									8.50-12	50
10.0/80-12									10.0/80-12	**40**
										10
AW305	8 PR									Driving wheel
										50
										40
										10

SIZE	LI/SS	New tire		Tire in service		SLR	RC	Rim	Type/Tube	Speed
		SW mm	OD mm	SW max mm	OD max mm	mm	mm			Km/h
	10 PR	268	716	277	730	314	2138	9.00	TL	Free Rolling
									8.50-12	50
10.0/80-12									10.0/80-12	**40**
										10
AW305	10 PR									Driving wheel
										50
										40
										10

PRESSURE																	
psi	7	12	17	23	26	28	31	34	37	40	43	46	48	51	54	57	59
bar	0,5	0,8	1,2	1,6	1,8	2,0	2,2	2,4	2,6	2,8	3,0	3,2	3,4	3,6	3,8	4,0	4,1
MAX. LOAD kg																	
	990	1260	1620	1960	2110	2250	2430	2610	2770	2925							
	1100	1400	1800	2180	2345	2500	2700	2900	3075	**3250**							
	1450	1815	2300	2775	3005	3220	3410	3620	3865	4105	4320	4525					
	705	900	1125	1395	1510	1620	1735	1855	1965	2070							
	785	1000	1250	1550	1675	1800	1930	2060	2180	**2300**							
	1035	1295	1620	1950	2135	2295	2445	2600	2755	2915	3060	3205					

PRESSURE																
psi	7	12	17	23	29	32	35	38	41	43	46	49	52	55	58	59
bar	0,5	0,8	1,2	1,6	2,0	2,2	2,4	2,6	2,8	3,0	3,2	3,4	3,6	3,8	4,0	4,1
MAX. LOAD kg																
	1095	1395	1800	2185	2520	2720	2925	3105	3285	3445	3600	3770	3940			
	1220	1550	2000	2430	2800	3025	3250	3450	3650	3825	4000	4190	**4375**			
	1605	2010	2555	3090	3595	3815	4055	4330	4600	4845	5085	5295	5525	5740	5965	6075
	770	980	1260	1575	1800	1935	2070	2195	2315	2420	2520	2645	2770			
	855	1090	1400	1750	2000	2150	2300	2440	2575	2690	2800	2940	**3075**			
	1130	1410	1790	2195	2585	2730	2890	3075	3255	3425	3585	3720	3875	4020	4185	4270

INCHES SIZES

PRESSURE																	
psi	7	12	14	17	20	23	26	29	32	35	38	41	43	45	46	49	52	55
bar	0,5	0,8	1,0	1,2	1,4	1,6	1,8	2,0	2,2	2,4	2,6	2,8	3,0	3,1	3,2	3,4	3,6	3,8
MAX. LOAD kg																		
	385	505	575	640	700	755	810	865	915	965	1010	1055	1095	1115				
	425	560	640	710	780	840	900	960	1015	1070	1120	1170	1215	**1240**				
	550	720	825	915	1005	1085	1160	1240	1310	1380	1445	1510	1565	1600				
	270	355	405	450	490	530	565	605	640	670	705	740	765	785				
	300	395	450	500	545	590	630	670	710	745	785	820	850	**870**				
	385	510	580	645	705	760	815	865	915	960	1015	1060	1095	1120				

PRESSURE																		
psi	7	12	14	17	20	23	26	29	32	35	38	41	43	46	49	52	55	57
bar	0,5	0,8	1,0	1,2	1,4	1,6	1,8	2,0	2,2	2,4	2,6	2,8	3,0	3,2	3,4	3,6	3,8	3,9
MAX. LOAD kg																		
	385	505	570	640	700	750	805	860	910	955	1000	1045	1090	1130	1170	1210	1250	1270
	425	560	635	710	775	835	895	955	1010	1060	1110	1160	1210	1255	1300	1345	1390	**1410**
	550	720	820	915	1000	1075	1155	1230	1305	1365	1430	1495	1560	1620	1675	1735	1795	1820
	265	350	400	445	485	525	565	605	635	670	700	735	760	790	820	845	875	885
	295	390	445	495	540	585	630	670	705	745	780	815	845	880	910	940	970	**985**
	380	505	575	640	695	755	815	865	910	960	1005	1050	1090	1135	1175	1215	1250	1270

For technical notes about pressure tables please refer to page 244.

RIB TRAILER

General-purpose tire for implements and trailers.

SIZE	New tire		Tire in service		SLR mm	RC mm	SRI	Rim	Type	Speed Km/h	PRESSURE psi / bar / MAX. LOAD kg
	SW mm	OD mm	SW mm	OD mm							
555/45-17 154F Rib Trailer	550	931	562	966	436	2865		16.00	TL	Free Rolling	
										80	
										40	
										10	

SIZE

555/45-17 **154F** **Rib Trailer**

14	20	26	32	38	43	49	55	61	67	72	78	84	90	96	101
1,0	1,4	1,8	2,2	2,6	3,0	3,4	3,8	4,2	4,6	5,0	5,4	5,8	6,2	6,6	7,0
1200	1465	1695	1905	2100	2285	2460	2625	2780	2935	3075	3220	3360	3495	3625	**3750**
1380	1685	1950	2190	2415	2630	2830	3020	3200	3375	3540	3705	3865	4020	4170	4315
2160	2635	3050	3430	3780	4115	4425	4725	5005	5285	5540	5795	6050	6290	6525	6750

For technical notes about pressure tables please refer to page 244.

T410

Excellent for both heavy duty agricultural and forestry applications.
The Agro Forest line ensures good all-round performance in forestry usage as well as good traction, load capability and durability in agricultural operations.

SIZE	New tire		Tire in service		SLR	RC	SRI	Rims	Tube	Speed	PRESSURE
	SW mm	OD mm	SW max mm	OD max mm	mm	mm				Km/h	psi / bar / MAX. LOAD kg
320/85-24 127A8 (124B) (12.4-24) **T410**	325	1165	345	1192	546	3462	550	W9-W10-**W11**	12.4-24	50 road	
										40 road	
										30 road	
										10 road	
										10 HT	

According to availability

SIZE	New tire		Tire in service		SLR	RC	SRI	Rims	Tube	Speed	PRESSURE
	SW mm	OD mm	SW max mm	OD max mm	mm	mm				Km/h	psi / bar / MAX. LOAD kg
380/85-24 137A8 (134B) (14.9-24) **T410**	380	1260	410	1302	583	3768	590	W11-**W12**-W13	14.9-24	50 road	
										40 road	
										30 road	
										10 road	
										10 HT	

SIZE	New tire		Tire in service		SLR	RC	SRI	Rims	Tube	Speed	PRESSURE
	SW mm	OD mm	SW max mm	OD max mm	mm	mm				Km/h	psi / bar / MAX. LOAD kg
380/85-24 TL 143A8 (140B) (14.9-24) **T410**	390	1275	410	1302	600	3810	600	W11-**W12**-W13	14.9-24	50 road	
										40 road	
										30 road	
										10 road	
										10 HT	

SIZE	New tire		Tire in service		SLR	RC	SRI	Rims	Tube	Speed	PRESSURE
	SW mm	OD mm	SW max mm	OD max mm	mm	mm				Km/h	psi / bar / MAX. LOAD kg
380/85-28 139A8 (136B) (14.9-28) **T410**	380	1365	410	1403	637	4071	650	W11-**W12**-W13	14.9-28	50 road	
										40 road	
										30 road	
										10 road	
										10 HT	

SIZE	New tire		Tire in service		SLR	RC	SRI	Rims	Tube	Speed	PRESSURE
	SW mm	OD mm	SW max mm	OD max mm	mm	mm				Km/h	psi / bar / MAX. LOAD kg
420/85-28 144A8 (141B) (16.9-28) **T410**	440	1435	451	1475	669	4275	675	W13-W14L **W15L**	16.9-28	50 road	
										40 road	
										30 road	
										10 road	
										10 HT	

SIZE	
320/85-24	127A8 (124B)
380/85-24	137A8 (134B)
380/85-24 TL	143A8 (140B)
380/85-28	139A8 (136B)
420/85-28	144A8 (141B)
460/85-30	150A8 (147B)

SIZE	
420/85-34	147A8 (144B)
420/85-34 TL	153A8 (150B)
460/85-34	152A8 (149B)
420/85-38	149A8 (146B)
460/85-38	154A8 (151B)
520/85-38	160A8 (157B)

14	17	20	23	25	26	28	29	30	32	33	35	36	38	39	41	42	43
1,0	1,2	1,4	1,6	1,7	1,8	1,9	2,0	2,1	2,2	2,3	2,4	2,5	2,6	2,7	2,8	2,9	3,0
1000	1120	1240	1360	1395	1435	1465	1495	1525	1555	1580	1600						
1085	1215	1355	1500	1540	1575	1610	1645	1675	1700	1725	**1750**						
1160	1300	1450	1605	1650	1685	1725	1760	1790	1820	1850	1875						
1425	1585	1745	1910	1995	2075	2165	2250	2290	2325	2405	2440	2470	2495	2515	2590	2610	2625
950	1065	1190	1315	1350	1385	1415	1445	1470	1495	1515	1535	1575	1610	1645	1680	1710	1745

14	17	20	23	25	26	28	29	30	32	33	35	36	38	39	41	42	43
1,0	1,2	1,4	1,6	1,7	1,8	1,9	2,0	2,1	2,2	2,3	2,4	2,5	2,6	2,7	2,8	2,9	3,0
1285	1450	1600	1750	1800	1850	1900	1945	1985	2025	2060	2120						
1425	1600	1775	1950	2000	2050	2095	2140	2175	2215	2245	**2300**						
1525	1710	1900	2085	2140	2195	2245	2290	2330	2370	2405	2460						
1875	2085	2295	2505	2610	2715	2820	2925	2975	3025	3130	3170	3205	3240	3275	3370	3395	3415
1250	1405	1560	1710	1755	1800	1840	1875	1910	1940	1970	1995	2050	2100	2150	2200	2250	2300

14	17	20	23	26	29	32	35	38	41	44	46	49	52	55	58
1,0	1,2	1,4	1,6	1,8	2,0	2,2	2,4	2,6	2,8	3,0	3,2	3,4	3,6	3,8	4,0
1285	1450	1600	1750	1850	1945	2025	2120	2200	2295	2390	2500				
1425	1600	1775	1950	2050	2140	2215	2300	2390	2500	2600	**2725**				
1525	1710	1900	2085	2195	2290	2370	2460	2555	2675	2785	2915				
1875	2085	2295	2505	2715	2925	3025	3170	3240	3370	3415	3540	3690	3805	3945	4050
1250	1405	1560	1710	1800	1875	1940	1995	2095	2190	2285	2370	2455	2540	2620	2700

14	17	20	23	25	26	28	29	30	32	33	35	36	38	39	41	42	43
1,0	1,2	1,4	1,6	1,7	1,8	1,9	2,0	2,1	2,2	2,3	2,4	2,5	2,6	2,7	2,8	2,9	3,0
1385	1550	1725	1900	1955	2005	2050	2095	2135	2170	2205	2240						
1510	1700	1880	2060	2115	2170	2220	2270	2315	2355	2395	**2430**						
1615	1820	2015	2205	2265	2325	2380	2430	2475	2520	2565	2600						
1980	2210	2435	2655	2765	2875	2985	3090	3150	3205	3310	3360	3405	3445	3485	3585	3615	3645
1325	1490	1650	1810	1860	1905	1950	1990	2030	2070	2100	2135	2190	2240	2295	2350	2400	2450

14	17	20	23	25	26	28	29	30	32	33	35	36	38	39	41	42	43
1,0	1,2	1,4	1,6	1,7	1,8	1,9	2,0	2,1	2,2	2,3	2,4	2,5	2,6	2,7	2,8	2,9	3,0
1600	1800	2020	2240	2295	2345	2395	2440	2480	2515	2545	2575						
1775	2000	2215	2430	2490	2550	2600	2650	2695	2735	2770	**2800**						
1900	2140	2370	2600	2665	2725	2785	2835	2880	2925	2965	2995						
2325	2595	2865	3130	3255	3390	3520	3645	3705	3760	3885	3930	3975	4010	4040	4160	4180	4200
1555	1755	1945	2135	2185	2235	2285	2325	2365	2400	2430	2455	2520	2585	2645	2705	2765	2825

SIZE	New tire		Tire in service					Rims	Tube	Speed	PRESSURE
	SW mm	OD mm	SW max mm	OD max mm	SLR mm	RC mm	SRI			Km/h	psi bar MAX. LOAD kg
460/85-30 150A8 (147B) (18.4-30) **T410**	480	1550	491	1598	720	4632	725	W14L-W15L **W16L**	18.4-30	50 road **40 road** 30 road 10 road 10 HT	

SIZE	New tire		Tire in service					Rims	Tube	Speed	PRESSURE
	SW mm	OD mm	SW max mm	OD max mm	SLR mm	RC mm	SRI			Km/h	psi bar MAX. LOAD kg
420/85-34 147A8 (144B) (16.9-34) **T410**	440	1575	451	1628	736	4734	750	W13L-W14L **W15L**	16.9-34	50 road **40 road** 30 road 10 road 10 HT	

According to availability

SIZE	New tire		Tire in service					Rims	Tube	Speed	PRESSURE
	SW mm	OD mm	SW max mm	OD max mm	SLR mm	RC mm	SRI			Km/h	psi bar MAX. LOAD kg
420/85-34 TL 153A8 (150B) (16.9-34) **T410**	445	1575	460	1628	736	4734	750	W13L-W14L **W15L**	16.9-34	50 road **40 road** 30 road 10 road 10 HT	

SIZE	New tire		Tire in service					Rims	Tube	Speed	PRESSURE
	SW mm	OD mm	SW max mm	OD max mm	SLR mm	RC mm	SRI			Km/h	psi bar MAX. LOAD kg
460/85-34 152A8 (149B) (18.4-34) **T410**	475	1645	491	1700	766	4938	775	W14L-W15L **W16L**	18.4-34	50 road **40 road** 30 road 10 road 10 HT	

SIZE	New tire		Tire in service					Rims	Tube	Speed	PRESSURE
	SW mm	OD mm	SW max mm	OD max mm	SLR mm	RC mm	SRI			Km/h	psi bar MAX. LOAD kg
420/85-38 149A8 (146B) (16.9-38) **T410**	440	1680	451	1729	787	5037	800	W13-W14L **W15L**	16.9-38	50 road **40 road** 30 road 10 road 10 HT	

SIZE	New tire		Tire in service					Rims	Tube	Speed	PRESSURE
	SW mm	OD mm	SW max mm	OD max mm	SLR mm	RC mm	SRI			Km/h	psi bar MAX. LOAD kg
460/85-38 154A8 (151B) (18.4-38) **T410**	470	1750	491	1801	819	5241	825	W14-W15L **W16L**	18.4-38	50 road **40 road** 30 road 10 road 10 HT	

SIZE	New tire		Tire in service					Rims	Tube	Speed	PRESSURE
	SW mm	OD mm	SW max mm	OD max mm	SLR mm	RC mm	SRI			Km/h	psi bar MAX. LOAD kg
520/85-38 160A8 (157B) (20.8-38) **T410**	520	1850	557	1911	859	5547	875	**DW16L**-DW18L	20.8-38	50 road **40 road** 30 road 10 road 10 HT	

14	17	20	23	25	26	28	29	30	32	33	35	36	38	39	41	42	43
1,0	1,2	1,4	1,6	1,7	1,8	1,9	2,0	2,1	2,2	2,3	2,4	2,5	2,6	2,7	2,8	2,9	3,0
1940	2180	2415	2650	2720	2785	2845	2900	2950	2995	3035	3075						
2105	2360	2630	2900	2975	3045	3105	3165	3220	3270	3310	**3350**						
2255	2525	2815	3105	3180	3255	3325	3385	3445	3495	3545	3585						
2775	3080	3390	3705	3865	4025	4185	4350	4420	4490	4640	4700	4750	4795	4830	4970	5000	5025
1850	2070	2310	2545	2610	2670	2725	2780	2825	2870	2905	2940	3015	3090	3165	3235	3305	3375

14	17	20	23	25	26	28	29	30	32	33	35	36	38	39	41	42	43
1,0	1,2	1,4	1,6	1,7	1,8	1,9	2,0	2,1	2,2	2,3	2,4	2,5	2,6	2,7	2,8	2,9	3,0
1775	2000	2215	2430	2490	2550	2600	2650	2695	2735	2770	2800						
1940	2180	2415	2650	2720	2785	2845	2900	2950	2995	3035	**3075**						
2075	2335	2585	2835	2910	2980	3040	3100	3155	3205	3250	3290						
2550	2840	3130	3410	3550	3695	3835	3975	4045	4105	4245	4300	4345	4390	4430	4555	4585	4615
1705	1915	2120	2325	2385	2440	2495	2545	2590	2630	2665	2700	2765	2835	2900	2960	3025	3085

14	17	20	23	26	29	32	35	38	41	44	46	49	52	55	58
1,0	1,2	1,4	1,6	1,8	2,0	2,2	2,4	2,6	2,8	3,0	3,2	3,4	3,6	3,8	4,0
1775	2000	2215	2430	2550	2650	2735	2800	2945	3085	3220	3350				
1940	2180	2415	2650	2785	2900	2995	3075	3230	3375	3515	**3650**				
2075	2335	2585	2835	2980	3100	3205	3290	3455	3610	3760	3905				
2550	2840	3130	3410	3695	3975	4105	4300	4390	4555	4615	4780	4985	5140	5335	5475
1705	1915	2120	2325	2440	2545	2630	2700	2835	2960	3085	3205	3320	3430	3540	3650

14	17	20	23	25	26	28	29	30	32	33	35	36	38	39	41	42	43
1,0	1,2	1,4	1,6	1,7	1,8	1,9	2,0	2,1	2,2	2,3	2,4	2,5	2,6	2,7	2,8	2,9	3,0
2020	2300	2550	2800	2870	2940	3005	3060	3115	3165	3210	3250						
2225	2500	2785	3075	3155	3225	3295	3355	3410	3465	3510	**3550**						
2380	2675	2980	3290	3375	3450	3525	3590	3650	3705	3755	3800						
2925	3255	3585	3925	4095	4265	4440	4615	4690	4760	4920	4980	5035	5080	5120	5270	5300	5325
1955	2195	2445	2700	2765	2830	2890	2945	2995	3040	3080	3115	3195	3275	3355	3435	3510	3585

14	17	20	23	25	26	28	29	30	32	33	35	36	38	39	41	42	43
1,0	1,2	1,4	1,6	1,7	1,8	1,9	2,0	2,1	2,2	2,3	2,4	2,5	2,6	2,7	2,8	2,9	3,0
1885	2120	2350	2575	2645	2705	2765	2820	2870	2920	2960	3000						
2050	2300	2550	2800	2875	2940	3005	3065	3115	3165	3210	**3250**						
2195	2460	2730	2995	3075	3145	3215	3275	3335	3390	3435	3480						
2700	3000	3300	3600	3750	3905	4050	4200	4270	4340	4485	4540	4595	4640	4680	4815	4850	4875
1800	2020	2240	2455	2520	2580	2635	2690	2735	2780	2815	2850	2925	3000	3070	3135	3205	3270

14	17	20	23	25	26	28	29	30	32	33	35	36	38	39	41	42	43
1,0	1,2	1,4	1,6	1,7	1,8	1,9	2,0	2,1	2,2	2,3	2,4	2,5	2,6	2,7	2,8	2,9	3,0
2135	2430	2670	2900	2985	3065	3140	3210	3275	3340	3395	3450						
2355	2650	2950	3250	3330	3410	3480	3545	3605	3660	3710	**3750**						
2520	2835	3155	3480	3565	3650	3725	3795	3855	3915	3970	4015						
3090	3445	3800	4155	4335	4510	4695	4875	4955	5030	5200	5260	5320	5370	5410	5570	5600	5625
2065	2325	2590	2850	2925	2990	3055	3110	3165	3210	3255	3290	3380	3465	3550	3630	3715	3795

14	17	20	23	25	26	28	29	30	32	33	35	36	38	39	41	42	43
1,0	1,2	1,4	1,6	1,7	1,8	1,9	2,0	2,1	2,2	2,3	2,4	2,5	2,6	2,7	2,8	2,9	3,0
2570	2900	3225	3550	3645	3730	3810	3885	3955	4015	4075	4125						
2830	3150	3510	3875	3975	4070	4160	4240	4315	4385	4445	**4500**						
3025	3370	3755	4145	4255	4355	4450	4535	4615	4690	4755	4815						
3750	4135	4540	4945	5160	5375	5590	5815	5915	6005	6205	6290	6360	6425	6480	6670	6715	6750
2485	2765	3080	3400	3490	3575	3650	3720	3785	3845	3900	3950	4060	4165	4275	4380	4480	4585

For technical notes about pressure tables please refer to page 244.

T440

T480

T428

T421

T414

T404

Designed to offer superior performance in the forest, they ensure high traction, excellent flotation, and minimise damage to the soil structure.

T440
More traction, better accessibility- T440 takes exclusive Trelleborg ProgressiveTraction® on board for the best grip in the business. The well known Trelleborg concept of inter-lug terraces has also been added, keeping the tread clean. Lug heads and shoulders are now heavier, making your T440 an even better match for tracks

T480
The T480's transverse grooves and wide flat tire profile give it unmatched track grip and compatibility. Even without tracks, you'll experience unmatched pulling power in every condition. And thanks to a tread with inter-lug terraces, have a self-cleaning tire that can always work harder and push further.

T428
Designed to provide excellent pull force in tough, clayey terrain as well as on ice and snow, either with or without the assistance of tracks and chains. The load is spread across a large contact area, which gives the tire a low ground bearing pressure, and puts minimum strain on the vehicle.

SIZE		
600/50-22.5 LS2	149A8	T480 SB
650/45-22.5 LS2	150A8	T440 SB
710/40-22.5 LS2	161A8	T480 SB
710/40-24.5 LS2	163A8	T440 SB
710/40-24.5 LS2	163A8	T480 SB
600/55-26.5 LS2	165A8	T440 SB
600/55-26.5 LS2	165A8	T480 SB
710/45-26.5 LS2	168A8	T440 SB
710/45-26.5 LS2	168A8	T480 SB
710/45-26.5 LS2	173A8	T480 SB
750/55-26.5 LS2	182A8	T440 SB
750/55-26.5 LS2	182A8	T480 SB
800/40-26.5 LS2	170A8	T440 SB
800/40-26.5 LS2	170A8	T480 SB
780/50-28.5 LS2	182A8	T480 SB

SIZE		
710/50-30.5 LS2	173A8	T428 SB
750/45-30.5 LS2	173A8	T428 SB
600/65-34 LS2	163A8	T440 SB
710/55-34 LS2	167A8	T440 SB

SIZE Tires for all-round service		
600/60-30.5	153A8	T414

SIZE Driving tires for single axle fitment		
500/45-22.5	129A8	T404
500/60-22.5	144A8	T421 SB

SIZE	LI/SI			New tire		Tire in service		SLR	RC	SRI	Rim	Tube
	ROAD	FOREST HT	FOREST LT	SW mm	OD mm	SW max mm	OD max mm	mm	mm			
600/50-22.5 LS2 T480 SB	149A8	149A2	156A2	610	1170	640	1199	550	3510	550	AG20.00	600/50-22.5

SIZE	LI/SI			New tire		Tire in service		SLR	RC	SRI	Rim	Tube
	ROAD	FOREST HT	FOREST LT	SW mm	OD mm	SW max mm	OD max mm	mm	mm			
650/45-22.5 LS2 T440 SB	150A8	150A2	157A2	650	1160	683	1189	539		550	AG20.00	650/45-22.5

SIZE	LI/SI			New tire		Tire in service		SLR	RC	SRI	Rim	Tube
	ROAD	FOREST HT	FOREST LT	SW mm	OD mm	SW max mm	OD max mm	mm	mm			
710/40-22.5 LS2 T480 SB	161A8	161A2	169A2	710	1170	746	1179	540	3510	550	AG24.00	700/40-22.5

SIZE	LI/SI			New tire		Tire in service		SLR	RC	SRI	Rim	Tube
	ROAD	FOREST HT	FOREST LT	SW mm	OD mm	SW max mm	OD max mm	mm	mm			
710/40-24.5 LS2 T440 SB	163A8	170A2	163A2	710	1220	745	1230	570	3700	575	AG24.00	710/40-24.5

SIZE	LI/SI			New tire		Tire in service		SLR	RC	SRI	Rim	Tube
	ROAD	FOREST HT	FOREST LT	SW mm	OD mm	SW max mm	OD max mm	mm	mm			
710/40-24.5 LS2 T480 SB	163A8	170A2	163A2	710	1220	745	1230	570	3700	575	AG24.00	710/40-24.5

Speed Km/h	PRESSURE psi	23	29	35	39	43	46	51	55	58	61	65	* Infl. Pressure with tracks Bar
	bar	1,6	2,0	2,4	2,7	3,0	3,2	3,5	3,8	4,0	4,2	4,5	
	MAX. LOAD kg												
40 road		2120	2435	2725	2930	3125	**3250**						5,0
10HT light terrain		2535	2965	3325	3565	3815	3960	4195	4425	4550			5,0
10HT heavy terrain		2120	2435	2725	2930	3125	**3250**						5,0
10HT very heavy terrain		1680	1955	2215	2385	2550	2640	2795	2945	3025	3125	3260	5,0
10LT light terrain		3080	3605	4060	4365	4690	4870	5165	5445	5600			5,0
10LT heavy terrain		2575	2975	3350	3605	3845	**4000**						5,0
10LT very heavy terrain		2040	2375	2695	2910	3120	3240	3435	3620	3720	3845	4015	5,0

Speed Km/h	PRESSURE psi	23	29	35	39	43	46	51	55	58	61	65	* Infl. Pressure with tracks Bar
	bar	1,6	2,0	2,4	2,7	3,0	3,2	3,5	3,8	4,0	4,2	4,5	
	MAX. LOAD kg												
40 road		2180	2500	2800	3015	3220	**3350**						5,0
10HT light terrain		2610	3050	3420	3660	3920	4070	4320	4560	4690			5,0
10HT heavy terrain		2180	2500	2800	3015	3220	**3350**						5,0
10HT very heavy terrain		2100	2445	2770	2995	3210	3340	3540	3730	3835	3965	4140	5,0
10LT light terrain		3170	3710	4175	4495	4830	5015	5320	5615	5775			5,0
10LT heavy terrain		2650	3060	3450	3715	3965	**4125**						5,0
10LT very heavy terrain		1725	2010	2275	2450	2620	2715	2875	3030	3115	3220	3360	5,0

Speed Km/h	PRESSURE psi	23	29	35	39	43	46	51	55	58	61	65	68	72	75	78	81	* Infl. Pressure with tracks Bar
	bar	1,6	2,0	2,4	2,7	3,0	3,2	3,5	3,8	4,0	4,2	4,5	4,7	5,0	5,2	5,4	5,6	
	MAX. LOAD kg																	
40 road		2240	2580	2900	3120	3320	3450	3705	3960	4125	4235	4395	4490	**4625**				6,0
10HT light terrain		2680	3135	3525	3785	4060	4210	4460	4700	4830	5020	5305	5490	5775	5880	5980	6075	6,0
10HT heavy terrain		2240	2580	2900	3120	3320	3450	3705	3960	4125	4235	4395	4490	**4625**				6,0
10HT very heavy terrain		1775	2065	2340	2525	2705	2810	2975	3130	3215	3320	3465	3580	3765	3885	4005	4125	6,0
10LT light terrain		3350	3920	4370	4660	4970	5165	5480	5780	5950	6200	6580	6830	7210	7350	7480	7605	6,0
10LT heavy terrain		2800	3195	3550	3825	4085	4250	4590	4925	5150	5295	5495	5625	**5800**				6,0
10LT very heavy terrain		2220	2580	2920	3135	3335	3445	3645	3840	3950	4085	4265	4425	4670	4830	4990	5150	6,0

Speed Km/h	PRESSURE psi	23	29	35	39	43	46	51	55	58	61	65	68	72	75	78	81	* Infl. Pressure with tracks Bar
	bar	1,6	2,0	2,4	2,7	3,0	3,2	3,5	3,8	4,0	4,2	4,5	4,7	5,0	5,2	5,4	5,6	
	MAX. LOAD kg																	
40 road		2360	2695	3000	3220	3420	3550	3815	4075	4250	4385	4575	4700	**4875**				6,0
10HT light terrain		2825	3305	3690	3935	4200	4350	4605	4845	4970	5165	5460	5655	5950	6085	6215	6345	6,0
10HT heavy terrain		2360	2695	3000	3220	3420	3550	3815	4075	4250	4385	4575	4700	**4875**				6,0
10HT very heavy terrain		1870	2175	2460	2645	2815	2910	3075	3230	3315	3420	3565	3685	3875	4000	4125	4250	6,0
10LT light terrain		3470	4060	4515	4800	5110	5310	5635	5950	6125	6385	6770	7030	7420	7570	7715	7850	6,0
10LT heavy terrain		2900	3295	3650	3935	4205	4375	4720	5070	5300	5455	5670	5805	**6000**				6,0
10LT very heavy terrain		2300	2675	3020	3235	3440	3550	3745	3950	4065	4205	4390	4555	4805	4970	5135	5300	6,0

Speed Km/h	PRESSURE psi	23	29	35	39	43	46	51	55	58	61	65	68	72	75	78	81	* Infl. Pressure with tracks Bar
	bar	1,6	2,0	2,4	2,7	3,0	3,2	3,5	3,8	4,0	4,2	4,5	4,7	5,0	5,2	5,4	5,6	
	MAX. LOAD kg																	
40 road		2360	2695	3000	3220	3420	3550	3815	4075	4250	4385	4575	4700	**4875**				6,0
10HT light terrain		2825	3305	3690	3935	4200	4350	4605	4845	4970	5165	5460	5655	5950	6085	6215	6345	6,0
10HT heavy terrain		2360	2695	3000	3220	3420	3550	3815	4075	4250	4385	4575	4700	**4875**				6,0
10HT very heavy terrain		1870	2175	2460	2645	2815	2910	3075	3230	3315	3420	3565	3685	3875	4000	4125	4250	6,0
10LT light terrain		3470	4060	4515	4800	5110	5310	5635	5950	6125	6385	6770	7030	7420	7570	7715	7850	6,0
10LT heavy terrain		2900	3295	3650	3935	4205	4375	4720	5070	5300	5455	5670	5805	**6000**				6,0
10LT very heavy terrain		2300	2675	3020	3235	3440	3550	3745	3950	4065	4205	4390	4555	4805	4970	5135	5300	6,0

SIZE	LI/SI			New tire		Tire in service		SLR	RC	SRI	Rim	Tube
	ROAD	FOREST HT	FOREST LT	SW mm	OD mm	SW max mm	OD max mm	mm	mm			
600/55-26.5 LS2 T440 SB	165A8	172A2	165A2	600	1340	630	1373	626	4050	625	AG20.00	600/55-26.5

SIZE	LI/SI			New tire		Tire in service		SLR	RC	SRI	Rim	Tube
	ROAD	FOREST HT	FOREST LT	SW mm	OD mm	SW max mm	OD max mm	mm	mm			
600/55-26.5 LS2 T480 SB	165A8	172A2	165A2	600	1340	630	1373	626	4050	625	AG20.00	600/55-26.5

SIZE	LI/SI			New tire		Tire in service		SLR	RC	SRI	Rim	Tube
	ROAD	FOREST HT	FOREST LT	SW mm	OD mm	SW max mm	OD max mm	mm	mm			
710/45-26.5 LS2 T440 SB	168A8	168A2	175A2	710	1340	746	1357	625	4020	625	AG24.00	710/45-26.5 / 750/50-26.5

SIZE	LI/SI			New tire		Tire in service		SLR	RC	SRI	Rim	Tube
	ROAD	FOREST HT	FOREST LT	SW mm	OD mm	SW max mm	OD max mm	mm	mm			
710/45-26.5 LS2 T480 SB	168A8	168A2	175A2	710	1340	746	1357	625	4020	625	AG24.00	710/45-26.5 / 750/50-26.5

SIZE	LI/SI			New tire		Tire in service		SLR	RC	SRI	Rim	Tube
	ROAD	FOREST HT	FOREST LT	SW mm	OD mm	SW max mm	OD max mm	mm	mm			
710/45-26.5 LS2 T480 SB	173A8	180A2	173A2	710	1340	746	1357	625	4020	625	AG24.00	710/45-26.5 / 750/50-26.5

Speed Km/h	PRESSURE psi	23	29	35	39	43	46	51	55	58	61	65	68	72	75	78	81	* Infl. Pressure with tracks Bar
	PRESSURE bar	1,6	2,0	2,4	2,7	3,0	3,2	3,5	3,8	4,0	4,2	4,5	4,7	5,0	5,2	5,4	5,6	
	MAX. LOAD kg																	
40 road		2500	2840	3150	3385	3610	3750	4035	4315	4500	4640	4840	4965	**5150**				6,0
10HT light terrain		2990	3500	3895	4140	4410	4575	4850	5110	5250	5460	5775	5985	6300	6440	6575	6705	6,0
10HT heavy terrain		2500	2840	3150	3385	3610	3750	4035	4315	4500	4640	4840	4965	**5150**				6,0
10HT very heavy terrain		1980	2305	2605	2790	2970	3060	3230	3400	3495	3610	3765	3895	4100	4235	4365	4500	6,0
10LT light terrain		3680	4305	4790	5095	5425	5630	5970	6300	6475	6705	7060	7280	7630	7815	7995	8170	6,0
10LT heavy terrain		3075	3495	3875	4170	4450	4625	4940	5250	5450	5630	5890	6060	**6300**				6,0
10LT very heavy terrain		2435	2835	3205	3435	3650	3765	3975	4190	4305	4450	4645	4785	5010	5165	5300	5450	6,0

Speed Km/h	PRESSURE psi	23	29	35	39	43	46	51	55	58	61	65	68	72	75	78	81	* Infl. Pressure with tracks Bar
	PRESSURE bar	1,6	2,0	2,4	2,7	3,0	3,2	3,5	3,8	4,0	4,2	4,5	4,7	5,0	5,2	5,4	5,6	
	MAX. LOAD kg																	
40 road		2500	2840	3150	3385	3610	3750	4035	4315	4500	4640	4840	4965	**5150**				6,0
10HT light terrain		2990	3500	3895	4140	4410	4575	4850	5110	5250	5460	5775	5985	6300	6440	6575	6705	6,0
10HT heavy terrain		2500	2840	3150	3385	3610	3750	4035	4315	4500	4640	4840	4965	**5150**				6,0
10HT very heavy terrain		1980	2305	2605	2790	2970	3060	3230	3400	3495	3610	3765	3895	4100	4235	4365	4500	6,0
10LT light terrain		3680	4305	4790	5095	5425	5630	5970	6300	6475	6705	7060	7280	7630	7815	7995	8170	6,0
10LT heavy terrain		3075	3495	3875	4170	4450	4625	4940	5250	5450	5630	5890	6060	**6300**				6,0
10LT very heavy terrain		2435	2835	3205	3435	3650	3765	3975	4190	4305	4450	4645	4785	5010	5165	5300	5450	6,0

Speed Km/h	PRESSURE psi	23	29	35	39	43	46	51	55	58	61	65	68	72	75	78	81	* Infl. Pressure with tracks Bar
	PRESSURE bar	1,6	2,0	2,4	2,7	3,0	3,2	3,5	3,8	4,0	4,2	4,5	4,7	5,0	5,2	5,4	5,6	
	MAX. LOAD kg																	
40 road		2725	3105	3450	3715	3965	4125	4410	4690	4875	5030	5255	5395	**5600**				6,0
10HT light terrain		3260	3815	4255	4530	4830	5015	5320	5615	5775	5980	6305	6510	6825	6985	7135	7280	6,0
10HT heavy terrain		2725	3105	3450	3715	3965	4125	4410	4690	4875	5030	5255	5395	**5600**				6,0
10HT very heavy terrain		2160	2515	2840	3050	3245	3350	3540	3730	3835	3965	4140	4270	4475	4615	4740	4875	6,0
10LT light terrain		4010	4690	5230	5575	5950	6155	6505	6835	7000	7280	7705	7980	8400	8595	8785	8970	6,0
10LT heavy terrain		3350	3820	4250	4550	4830	5000	5375	5750	6000	6190	6470	6645	**6900**				6,0
10LT very heavy terrain		2655	3090	3495	3750	3995	4125	4350	4570	4680	4830	5020	5195	5465	5645	5820	6000	6,0

Speed Km/h	PRESSURE psi	23	29	35	39	43	46	51	55	58	61	65	68	72	75	78	81	* Infl. Pressure with tracks Bar
	PRESSURE bar	1,6	2,0	2,4	2,7	3,0	3,2	3,5	3,8	4,0	4,2	4,5	4,7	5,0	5,2	5,4	5,6	
	MAX. LOAD kg																	
40 road		2725	3105	3450	3715	3965	4125	4410	4690	4875	5030	5255	5395	**5600**				6,0
10HT light terrain		3260	3815	4255	4530	4830	5015	5320	5615	5775	5980	6305	6510	6825	6985	7135	7280	6,0
10HT heavy terrain		2725	3105	3450	3715	3965	4125	4410	4690	4875	5030	5255	5395	**5600**				6,0
10HT very heavy terrain		2160	2515	2840	3050	3245	3350	3540	3730	3835	3965	4140	4270	4475	4615	4740	4875	6,0
10LT light terrain		4010	4690	5230	5575	5950	6155	6505	6835	7000	7280	7705	7980	8400	8595	8785	8970	6,0
10LT heavy terrain		3350	3820	4250	4550	4830	5000	5375	5750	6000	6190	6470	6645	**6900**				6,0
10LT very heavy terrain		2655	3090	3495	3750	3995	4125	4350	4570	4680	4830	5020	5195	5465	5645	5820	6000	6,0

Speed Km/h	PRESSURE psi	23	28	34	39	43	46	50	55	57	60	64	67	72	75	77	80	84	87	* Infl. Pressure with tracks Bar
	PRESSURE bar	1,6	2,0	2,4	2,7	3,0	3,2	3,5	3,8	4,0	4,2	4,5	4,7	5,0	5,2	5,4	5,6	5,8	6,0	
	MAX. LOAD kg																			
40 road		2725	3105	3450	3715	3965	4125	4410	4690	4875	5030	5255	5395	5600	5785	5965	6145	6320	**6500**	6,0
10HT light terrain		3260	3815	4255	4530	4830	5015	5320	5615	5775	5980	6305	6510	6825	6985	7135	7280	7425	7560	6,0
10HT heavy terrain		2725	3105	3450	3715	3965	4125	4410	4690	4875	5030	5255	5395	5600	5785	5965	6145	6320	**6500**	6,0
10HT very heavy terrain		2160	2515	2840	3050	3245	3350	3540	3730	3835	3965	4140	4270	4475	4615	4740	4875	4970	5060	6,0
10LT light terrain		4010	4690	5230	5575	5950	6155	6505	6835	7000	7280	7705	7980	8400	8595	8785	8970	9145	9315	6,0
10LT heavy terrain		3350	3820	4250	4550	4830	5000	5375	5750	6000	6190	6470	6645	6900	7125	7345	7565	7785	**8000**	6,0
10LT very heavy terrain		2655	3090	3495	3750	3995	4125	4350	4570	4680	4830	5020	5195	5465	5645	5820	6000	6120	6230	6,0

SIZE	LI/SI			New tire		Tire in service		SLR	RC	SRI	Rim	Tube
	ROAD	FOREST HT	FOREST LT	SW mm	OD mm	SW max mm	OD max mm	mm	mm			
750/55-26.5 T440 SB	182A8	190A2	182A2	750	1485	788	1499	690	4485	700	AG24.00	710/45-26.5 / 750/50-26.5

SIZE	LI/SI			New tire		Tire in service		SLR	RC	SRI	Rim	Tube
	ROAD	FOREST HT	FOREST LT	SW mm	OD mm	SW max mm	OD max mm	mm	mm			
750/55-26.5 T480 SB	182A8	190A2	182A2	750	1485	788	1499	690	4485	700	AG24.00	710/45-26.5 / 750/50-26.5

SIZE	LI/SI			New tire		Tire in service		SLR	RC	SRI	Rim	Tube
	ROAD	FOREST HT	FOREST LT	SW mm	OD mm	SW max mm	OD max mm	mm	mm			
800/40-26.5 T440 SB	170A8	177A2	170A2	800	1340	840	1357	625	4020	625	AG28.00	800/40-26.5

SIZE	LI/SI			New tire		Tire in service		SLR	RC	SRI	Rim	Tube
	ROAD	FOREST HT	FOREST LT	SW mm	OD mm	SW max mm	OD max mm	mm	mm			
800/40-26.5 T480 SB	170A8	177A2	170A2	800	1340	840	1357	625	4020	625	AG28.00	800/40-26.5

SIZE	LI/SI			New tire		Tire in service		SLR	RC	SRI	Rim	Tube
	ROAD	FOREST HT	FOREST LT	SW mm	OD mm	SW max mm	OD max mm	mm	mm			
780/50-28.5 T480 SB	182A8	190A2	182A2	780	1525	819	1543	705	4660	725	AG26.00	

Speed Km/h	PRESSURE psi	23	28	34	39	43	46	50	55	57	60	64	67	72	75	77	80	84	87	* Infl. Pressure with tracks Bar
	PRESSURE bar	1,6	2,0	2,4	2,7	3,0	3,2	3,5	3,8	4,0	4,2	4,5	4,7	5,0	5,2	5,4	5,6	5,8	6,0	
	MAX. LOAD kg																			
40 road		3550	4050	4500	4820	5115	5300	5700	6100	6365	6565	6850	7035	7300	7545	7785	8025	8265	**8500**	6,0
10HT light terrain		4245	4970	5545	5905	6300	6520	6890	7240	7420	7715	8170	8460	8910	9115	9310	9500	9680	9855	6,0
10HT heavy terrain		3550	4050	4500	4820	5115	5300	5700	6100	6365	6565	6850	7035	7300	7545	7785	8025	8265	**8500**	6,0
10HT very heavy terrain		2815	3275	3700	3975	4230	4370	4610	4840	4960	5115	5320	5510	5795	5985	6175	6365	6485	6605	6,0
10LT light terrain		5235	6125	6855	7330	7840	8085	8515	8915	9100	9470	10035	10405	10965	11220	11465	11700	11930	12150	6,0
10LT heavy terrain		4375	5010	5600	5965	6300	6500	7000	7500	7835	8080	8440	8670	9000	9320	9640	9960	10280	**10600**	6,0
10LT very heavy terrain		3465	4035	4565	4915	5245	5430	5725	5995	6115	6300	6525	6760	7120	7360	7595	7835	7985	8130	6,0

Speed Km/h	PRESSURE psi	23	28	34	39	43	46	50	55	57	60	64	67	72	75	77	80	84	87	* Infl. Pressure with tracks Bar
	PRESSURE bar	1,6	2,0	2,4	2,7	3,0	3,2	3,5	3,8	4,0	4,2	4,5	4,7	5,0	5,2	5,4	5,6	5,8	6,0	
	MAX. LOAD kg																			
40 road		3550	4050	4500	4820	5115	5300	5700	6100	6365	6565	6850	7035	7300	7545	7785	8025	8265	**8500**	6,0
10HT light terrain		4245	4970	5545	5905	6300	6520	6890	7240	7420	7715	8170	8460	8910	9115	9310	9500	9680	9855	6,0
10HT heavy terrain		3550	4050	4500	4820	5115	5300	5700	6100	6365	6565	6850	7035	7300	7545	7785	8025	8265	**8500**	6,0
10HT very heavy terrain		2815	3275	3700	3975	4230	4370	4610	4840	4960	5115	5320	5510	5795	5985	6175	6365	6485	6605	6,0
10LT light terrain		5235	6125	6855	7330	7840	8085	8515	8915	9100	9470	10035	10405	10965	11220	11465	11700	11930	12150	6,0
10LT heavy terrain		4375	5010	5600	5965	6300	6500	7000	7500	7835	8080	8440	8670	9000	9320	9640	9960	10280	**10600**	6,0
10LT very heavy terrain		3465	4035	4565	4915	5245	5430	5725	5995	6115	6300	6525	6760	7120	7360	7595	7835	7985	8130	6,0

Speed Km/h	PRESSURE psi	23	29	35	39	43	46	51	55	58	61	65	68	72	75	78	81	* Infl. Pressure with tracks Bar
	PRESSURE bar	1,6	2	2,4	2,7	3	3,2	3,5	3,8	4	4,2	4,5	4,7	5	5,2	5,4	5,6	
	MAX. LOAD kg																	
40 road		2900	3340	3750	4005	4235	4375	4720	5070	5300	5455	5670	5805	**6000**				6,0
10HT light terrain		3470	4060	4560	4895	5250	5420	5715	5995	6125	6385	6770	7030	7420	7570	7715	7850	6,0
10HT heavy terrain		2900	3340	3750	4005	4235	4375	4720	5070	5300	5455	5670	5805	**6000**				6,0
10HT very heavy terrain		2300	2675	3030	3270	3500	3630	3835	4020	4110	4235	4390	4555	4805	4970	5135	5300	6,0
10LT light terrain		4365	5110	5700	6070	6475	6700	7080	7445	7630	7920	8370	8660	9100	9270	9430	9585	6,0
10LT heavy terrain		3650	4160	4625	4955	5260	5450	5850	6240	6500	6680	6925	7085	**7300**				6,0
10LT very heavy terrain		2890	3365	3805	4085	4350	4490	4735	4975	5095	5260	5470	5655	5940	6130	6310	6500	6,0

Speed Km/h	PRESSURE psi	23	29	35	39	43	46	51	55	58	61	65	68	72	75	78	81	* Infl. Pressure with tracks Bar
	PRESSURE bar	1,6	2	2,4	2,7	3	3,2	3,5	3,8	4	4,2	4,5	4,7	5	5,2	5,4	5,6	
	MAX. LOAD kg																	
40 road		2900	3340	3750	4005	4235	4375	4720	5070	5300	5455	5670	5805	**6000**				6,0
10HT light terrain		3470	4060	4560	4895	5250	5420	5715	5995	6125	6385	6770	7030	7420	7570	7715	7850	6,0
10HT heavy terrain		2900	3340	3750	4005	4235	4375	4720	5070	5300	5455	5670	5805	**6000**				6,0
10HT very heavy terrain		2300	2675	3030	3270	3500	3630	3835	4020	4110	4235	4390	4555	4805	4970	5135	5300	6,0
10LT light terrain		4365	5110	5700	6070	6475	6700	7080	7445	7630	7920	8370	8660	9100	9270	9430	9585	6,0
10LT heavy terrain		3650	4160	4625	4955	5260	5450	5850	6240	6500	6680	6925	7085	**7300**				6,0
10LT very heavy terrain		2890	3365	3805	4085	4350	4490	4735	4975	5095	5260	5470	5655	5940	6130	6310	6500	6,0

Speed Km/h	PRESSURE psi	23	28	34	39	43	46	50	55	57	60	64	67	72	75	77	80	84	87	* Infl. Pressure with tracks Bar
	PRESSURE bar	1,6	2,0	2,4	2,7	3,0	3,2	3,5	3,8	4,0	4,2	4,5	4,7	5,0	5,2	5,4	5,6	5,8	6,0	
	MAX. LOAD kg																			
40 road		3550	4050	4500	4820	5115	5300	5715	6125	6400	6595	6875	7050	7300	7545	7785	8025	8265	**8500**	6,0
10HT light terrain		4245	4970	5545	5905	6300	6520	6890	7240	7420	7730	8195	8500	8965	9155	9345	9520	9690	9855	6,0
10HT heavy terrain		3550	4050	4500	4820	5115	5300	5715	6125	6400	6595	6875	7050	7300	7545	7785	8025	8265	**8500**	6,0
10HT very heavy terrain		2810	3275	3700	3975	4230	4370	4610	4840	4960	5115	5320	5515	5810	6010	6205	6400	6515	6625	6,0
10LT light terrain		5235	6125	6855	7330	7840	8085	8515	8915	9100	9485	10065	10450	11030	11275	11505	11730	11945	12150	6,0
10LT heavy terrain		4375	5010	5600	5965	6300	6500	7015	7535	7880	8120	8465	8685	9000	9320	9640	9960	10280	**10600**	6,0
10LT very heavy terrain		3465	4035	4565	4915	5245	5430	5725	5995	6115	6300	6525	6770	7140	7385	7635	7880	8025	8160	6,0

SIZE	LI/SI			New tire		Tire in service		SLR mm	RC mm	SRI	Rim	Tube
	ROAD	FOREST HT	FOREST LT	SW mm	OD mm	SW max mm	OD max mm					
710/50-30.5 LS2 T428 SB	173A8	173A2	180A2	710	1485	746	1522	700	4485	700	AG24.00	710/50-30.5 / 750/45-30.5

According to availability

SIZE	LI/SI			New tire		Tire in service		SLR mm	RC mm	SRI	Rim	Tube
	ROAD	FOREST HT	FOREST LT	SW mm	OD mm	SW max mm	OD max mm					
750/45-30.5 LS2 T428 SB	173A8	173A2	180A2	750	1465	788	1497	700	4395	685	AG24.00	710/50-30.5 / 750/45-30.5

SIZE	LI/SI			New tire		Tire in service		SLR mm	RC mm	SRI	Rim	Tube
	ROAD	FOREST HT	FOREST LT	SW mm	OD mm	SW max mm	OD max mm					
600/65-34 LS2 T440 SB	163A8	163A2	170A2	610	1650	630	1690	765	5070	775	DW20A	600/65-34

SIZE	LI/SI			New tire		Tire in service		SLR mm	RC mm	SRI	Rim	Tube
	ROAD	FOREST HT	FOREST LT	SW mm	OD mm	SW max mm	OD max mm					
710/55-34 LS2 T440 SB	167A8	167A2	174A2	710	1650	746	1691	775	4950	760	**DW24A**	700/55-34

Driving tires for single axle fitment SIZE	LI/SI			New tire		Tire in service		SLR mm	RC mm	SRI	Rim	Tube
	ROAD	FOREST HT	FOREST LT	SW mm	OD mm	SW max mm	OD max mm					
600/60-30.5 T414 FS	153A8	153A2	160A2	600	1495	638	1545		4485	700	AG20.00	600/60-30.5

Speed Km/h	PRESSURE psi	23	29	35	39	43	46	51	55	58	61	65	68	72	75	78	81	* Infl. Pressure with tracks Bar
	PRESSURE bar	1,6	2,0	2,4	2,7	3,0	3,2	3,5	3,8	4,0	4,2	4,5	4,7	5,0	5,2	5,4	5,6	
	MAX. LOAD kg																	
40 road		3150	3595	4000	4295	4575	4750	5140	5535	5800	5955	6175	6310	**6500**				6,0
10HT light terrain		3770	4410	4920	5245	5600	5805	6150	6475	6650	6945	7380	7680	8120	8270	8410	8540	6,0
10HT heavy terrain		3150	3595	4000	4295	4575	4750	5140	5535	5800	5955	6175	6310	**6500**				6,0
10HT very heavy terrain		2495	2905	3285	3525	3760	3885	4100	4315	4430	4575	4770	4955	5235	5420	5615	5800	6,0
10LT light terrain		4635	5425	6090	6530	7000	7220	7600	7955	8120	8485	9025	9395	9940	10135	10315	10490	6,0
10LT heavy terrain		3875	4455	5000	5325	5620	5800	6285	6775	7100	7300	7580	7755	**8000**				6,0
10LT very heavy terrain		3770	3575	4050	4365	4670	4845	5115	5350	5460	5620	5820	6055	6405	6630	6870	7100	6,0

Speed Km/h	PRESSURE psi	23	29	35	39	43	46	51	55	58	61	65	68	72	75	78	81	* Infl. Pressure with tracks Bar
	PRESSURE bar	1,6	2,0	2,4	2,7	3,0	3,2	3,5	3,8	4,0	4,2	4,5	4,7	5,0	5,2	5,4	5,6	
	MAX. LOAD kg																	
40 road		3150	3595	4000	4295	4575	4750	5140	5535	5800	5955	6175	6310	**6500**				6,0
10HT light terrain		3770	4410	4920	5245	5600	5805	6150	6475	6650	6945	7380	7680	8120	8270	8410	8540	6,0
10HT heavy terrain		3150	3595	4000	4295	4575	4750	5140	5535	5800	5955	6175	6310	**6500**				6,0
10HT very heavy terrain		2495	2905	3285	3525	3760	3885	4100	4315	4430	4575	4770	4955	5235	5420	5615	5800	6,0
10LT light terrain		4635	5425	6035	6410	6825	7080	7500	7905	8120	8485	9025	9395	9940	10135	10315	10485	6,0
10LT heavy terrain		3875	4400	4875	5240	5585	5800	6285	6770	7100	7300	7580	7755	**8000**				6,0
10LT very heavy terrain		3070	3575	4035	4325	4595	4740	5000	5265	5405	5585	5820	6055	6405	6630	6870	7100	6,0

Speed Km/h	PRESSURE psi	23	29	35	39	43	46	51	55	58	61	65	* Infl. Pressure with tracks Bar
	PRESSURE bar	1,6	2,0	2,4	2,7	3,0	3,2	3,5	3,8	4,0	4,2	4,5	
	MAX. LOAD kg												
40 road		3250	3710	4125	4425	4700	**4875**						5,0
10HT light terrain		3890	4550	5075	5410	5775	5980	6325	6655	6825			5,0
10HT heavy terrain		3250	3710	4125	4425	4700	4875						5,0
10HT very heavy terrain		3170	3690	4165	4455	4725	**4875**	5135	5415	5575	5765	6025	5,0
10LT light terrain		4785	5600	6215	6585	7000	7275	7725	8160	8400			5,0
10LT heavy terrain		4000	4530	5000	5390	5765	6000						5,0
10LT very heavy terrain		2575	2995	3390	3640	3875	4005	4225	4445	4555	4700	4895	5,0

Speed Km/h	PRESSURE psi	23	29	35	39	43	46	49	55	58	61	65	* Infl. Pressure with tracks Bar
	PRESSURE bar	1,6	2,0	2,4	2,7	3,0	3,2	3,4	3,8	4,0	4,2	4,5	
	MAX. LOAD kg												
40 road		3650	4160	4625	4955	5260	**5450**						4,0
10HT light terrain		4365	5110	5700	6070	6475	6700	6980	7445	7630			4,0
10HT heavy terrain		3650	4160	4625	4955	5260	**5450**						4,0
10HT very heavy terrain		3565	4150	4680	5000	5305	5450	5655	6060	6230	6440	6725	4,0
10LT light terrain		5385	6300	6980	7385	7840	8145	8495	9115	9380			4,0
10LT heavy terrain		4500	5085	5600	6030	6440	**6700**						4,0
10LT very heavy terrain		2890	3365	3805	4085	5305	4490	4670	4975	5100	5260	5470	4,0

Speed Km/h	PRESSURE psi	14	23	29	35	39	43	46	49	51
	PRESSURE bar	1,0	1,6	2,0	2,4	2,7	3,0	3,2	3,4	3,5
	MAX. LOAD kg									
40 road		1845	2900	3295	**3650**					
10HT light terrain		2290	3470	4060	4515	4800	5110			
10HT heavy terrain		1845	2900	3295	**3650**					
10HT very heavy terrain		1545	2295	2675	3020	3235	3440	3550	3685	
10LT light terrain		2800	4245	4970	5540	5905	6300			
10LT heavy terrain		2260	3550	4045	**4500**					
10LT very heavy terrain		1890	2810	3275	3700	3970	4230	4370	4545	

Tires for all-round service	LI/SI			New tire		Tire in service		SLR	RC	SRI	Rim	Tube
SIZE	ROAD	FOREST HT	FOREST LT	SW mm	OD mm	SW max mm	OD max mm	mm	mm			
500/45-22.5 **T404**	129A8 Remplace LI 12 PR	129A2	136A2	500	1020	525	1045		3066	485	AG16.00	500/45-22.5

Tires for all-round service	LI/SI			New tire		Tire in service		SLR	RC	SRI	Rim	Tube
SIZE	ROAD	FOREST HT	FOREST LT	SW mm	OD mm	SW max mm	OD max mm	mm	mm			
500/60-22.5 **T421 SB**	144A8	144A2	151A2	500	1170	525	1200		3525	550	AG16.00	500/60-22.5

Speed Km/h	PRESSURE psi	23	29	35	39	43	46	49	51	* Infl. Pressure with tracks Bar
	bar	1,6	2,0	2,4	2,7	3,0	3,2	3,4	3,5	
	MAX. LOAD kg									
40 road		1450	1660	**1850**						5,0
10HT light terrain		1735	2030	2270	2425	2590				5,0
10HT heavy terrain		1450	1660	**1850**						5,0
10HT very heavy terrain		1150	1335	1515	1625	1735	1795	1870		5,0
10LT light terrain		2155	2520	2790	2955	3155				5,0
10LT heavy terrain		1800	2035	**2240**						5,0
10LT very heavy terrain		1425	1660	1870	2000	2120	2180	2260		5,0

Speed Km/h	PRESSURE psi	23	29	35	39	43	46	51	55	58	61	65	68	* Infl. Pressure with tracks Bar
	bar	1,6	2,0	2,4	2,7	3,0	3,2	3,5	3,8	4,0	4,2	4,5	4,7	
	MAX. LOAD kg													
40 road		1900	2175	2430	2585	2720	**2800**							5,0
10HT light terrain		2275	2660	2975	3180	3405	3505	3680	3850	3920				5,0
10HT heavy terrain		1900	2175	2430	2585	2720	**2800**							5,0
10HT very heavy terrain		1505	1750	1985	2135	2275	2355	2485	2595	2645	2720	2810		5,0
10LT light terrain		2750	3220	3630	3910	4200	4320	4540	4745	4830				5,0
10LT heavy terrain		2300	2660	3000	3185	3350	**3450**							5,0
10LT very heavy terrain		1820	2120	2405	2600	2790	2900	3065	3200	3260	3350	3465		5,0

For technical notes about pressure tables please refer to page 244.

T418 SKIDDER

Trelleborg T418 is the perfect tire for heavy-duty logging service. It is specifically designed for log skidding service with maximum penetration and tear resistance to provide longer tire life under the most severe operating conditions. The armored plies and Steel belt protect the carcass against stumps, boulders and rocks.

SIZE	PR	New tire		Tire in service		SLR	RC	Rim	Type	Tube
		SW mm	OD mm	SW max mm	OD max mm	mm	mm			
23.1-26 **T418 SB**	16	600	1615	615	1655	750	4810	DW20B	TL	23.1-26 TR218

SIZE	PR	New tire		Tire in service		SLR	RC	Rim	Type	Tube
		SW mm	OD mm	SW max mm	OD max mm	mm	mm			
28L-26 **T418 SB**	20	705	1630	725	1670	747	4855	DW25B	TL	28L-26 TR218

SIZE	PR	New tire		Tire in service		SLR	RC	Rim	Type	Tube
		SW mm	OD mm	SW max mm	OD max mm	mm	mm			
28L-26 **T418 FS**	26	705	1630	725	1670	747	4855	DW25B	TL	28L-26 TR218

SIZE	
23.1-26	16 PR
28L-26	20 PR
28L-26	26 PR
24.5-32	16 PR

SIZE	
30.5L-32	20 PR
30.5L-32	26 PR
DH 35.5L-32	24 PR

	PRESSURE														
Speed	psi	12	14	17	20	23	26	29	32	35	38	41	43	46	48
Km/h	bar	0,8	1,0	1,2	1,4	1,6	1,8	2,0	2,2	2,4	2,6	2,8	3,0	3,2	3,3
	MAX. LOAD kg														
40 road		1890	2150	2395	2620	2830	3035	3230	3410	3590					
30 road		2360	2690	2995	3275	3540	3795	4035	4265	**4490**					
10 light terrain		2900	3305	3680	4020	4345	4660	4955	5235	5515	5780	6035	6280		
10 heavy terrain		2360	2690	2995	3275	3540	3795	4035	4265	4490					
10 very heavy terrain		1935	2205	2455	2685	2905	3110	3310	3495	3680	3860	4030	4195	4360	4435

	PRESSURE															
Speed	psi	12	14	17	20	23	26	29	30	32	35	38	41	42	43	46	48
Km/h	bar	0,8	1,0	1,2	1,4	1,6	1,8	2,0	2,1	2,2	2,4	2,6	2,8	2,9	3,0	3,2	3,3
	MAX. LOAD kg																
40 road		2170	2470	2750	3010	3250	3485	3705	3810	3915	4120						
30 road		2710	3085	3435	3760	4065	4355	4630	4765	4895	**5150**						
10 light terrain		3330	3790	4220	4615	4990	5350	5385	5850	6010	6325	6625	6920	7065	7210		
10 heavy terrain		2710	3085	3435	3760	4065	4355	4630	4765	4895	5150						
10 very heavy terrain		2220	2530	2815	3085	3335	3570	3795	3905	4015	4225	4425	4620	4720	4815	5000	5090

	PRESSURE											
Speed	psi	12	17	23	29	35	41	43	49	55	60	67
Km/h	bar	0,8	1,2	1,6	2,0	2,4	2,8	3,0	3,4	3,8	4,2	4,7
	MAX. LOAD kg											
40 road		2230	2830	3345	3810	4240	4640	4830	5200			
30 road		2790	3535	4180	4765	5300	5800	6040	**6500**			
10 light terrain		3425	4340	5135	5850	6510	7120	7415	7980	8515	9030	
10 heavy terrain		2790	3535	4180	4765	5300	5800	6040	6500			
10 very heavy terrain		2290	2900	3430	3905	4345	4755	4955	5330	5685	6030	6440

SIZE	PR	New tire		Tire in service		SLR mm	RC mm	Rim	Type	Tube
		SW mm	OD mm	SW max mm	OD max mm					
24.5-32 **T418 SB**	16	630	1825	645	1870	832	5425	DH21	TL	24.5-32 TR218

SIZE	PR	New tire		Tire in service		SLR mm	RC mm	Rim	Type	Tube
		SW mm	OD mm	SW max mm	OD max mm					
30.5L-32 **T418 SB**	20	760	1840	780	1885	840	5470	DH27	TL	30.5-32 TR218

SIZE	PR	New tire		Tire in service		SLR mm	RC mm	Rim	Type	Tube
		SW mm	OD mm	SW max mm	OD max mm					
30.5L-32 **T418 SB**	26	760	1840	780	1885	840	5470	DH27	TL	30.5-32 TR218

SIZE	PR	New tire		Tire in service		SLR mm	RC mm	Rim	Type	Tube
		SW mm	OD mm	SW max mm	OD max mm					
DH35.5L-32 **T418 SB**	24	890	2000	920	2040	905	5925	DH31	TL	

Speed Km/h	PRESSURE psi	12	14	17	20	23	26	29	30	32	35	38	41	42
	bar	0,8	1,0	1,2	1,4	1,6	1,8	2,0	2,1	2,2	2,4	2,6	2,8	2,9
	MAX. LOAD kg													
40 road		2275	2590	2885	3155	3410	3655	3890	4000					
30 road		2845	3240	3605	3945	4265	4570	4860	**5000**					
10 light terrain		3495	3980	4425	4845	5235	5610	5970	6140	6310	6635	6955		
10 heavy terrain		2845	3240	3605	3945	4265	4570	4860	5000					
10 very heavy terrain		2335	2655	2955	3235	3495	3745	3985	4100	4215	4430	4645	4850	4955

Speed Km/h	PRESSURE psi	12	14	17	20	23	25	26	29	30	35	38	42
	bar	0,8	1,0	1,2	1,4	1,6	1,7	1,8	2,0	2,1	2,4	2,6	2,9
	MAX. LOAD kg												
40 road		2730	3110	3460	3790	4095	4240	4390	4665	4800			
30 road		3410	3885	4325	4735	5120	5300	5485	5830	**6000**			
10 light terrain		4185	4770	5310	5815	6285	6510	6735	7160	7370	7965	8350	
10 heavy terrain		3410	3885	4325	4735	5120	5300	5485	5830	6000			
10 very heavy terrain		2795	3185	3545	3885	4200	4345	4500	4780	4920	5320	5575	5940

Speed Km/h	PRESSURE psi	12	14	17	20	23	26	29	32	35	38	41	43	46	49	52	55	57
	bar	0,8	1,0	1,2	1,4	1,6	1,8	2,0	2,2	2,4	2,6	2,8	3,0	3,2	3,4	3,6	3,8	3,9
	MAX. LOAD kg																	
40 road		2730	3110	3460	3790	4095	4390	4665	4930	5190	5440	5680						
30 road		3410	3890	4325	4735	5120	5485	5830	6165	6490	6800	**7100**						
10 light terrain		4185	4775	5310	5815	6285	6735	7160	7570	7970	8350	8720	9075	9425	9770			
10 heavy terrain		3410	3890	4325	4735	5120	5485	5830	6165	6490	6800	7100						
10 very heavy terrain		2795	3190	3545	3885	4200	4500	4780	5055	5320	5575	5820	6060	6295	6525	6745	6960	7070

Speed Km/h	PRESSURE psi	12	14	17	20	23	26	30	32	35	38	41	42
	bar	0,8	1,0	1,2	1,4	1,6	1,8	2,1	2,2	2,4	2,6	2,8	2,9
	MAX. LOAD kg												
40 road		3640	4150	4610	5050	5460	5850	6400					
30 road		4550	5185	5765	6310	6825	7310	**8000**					
10 light terrain		5890	6715	7465	8170	8840	9465	10360	10645	11200			
10 heavy terrain		4550	5185	5765	6310	6825	7310	8000					
10 very heavy terrain		3730	4250	4725	5175	5595	5995	6560	6740	7095	7435	7760	7925

For technical notes about pressure tables please refer to page 244.

TH400

Radial line designed for telescopic handlers, backhoes and compact loaders. The TH400 represents the perfect solution both for farming and for light industrial application.
Product plus:
- great stability
- maximum resistance to stress and laceration
- superior traction
- outstanding self-cleaning

TH500

The new Trelleborg TH500 tire perfectly matches the requirements of telehandlers and backhoes operating on hard surfaces. Both on the road and in the yard the TH500 delivers exactly the performance and reliability you need from a tire.
The TH500 tread design is closed in the center to deliver long tire life and on road performance whilst its open shoulder construction ensures excellent self-cleaning capabilities.

SIZE	SW mm	OD mm	SLR mm	RC mm	SRI	Rim	Permitted rims	Type	Speed Km/h	PRESSURE psi bar MAX. LOAD kg
11LR16									**40 S**	
									35 S	
122A8	290	850	370	2530	400	W8	W10L	TL	30 S	
									25 S	
TH400									10 Cyc S	
									Stat S	

SIZE	SW mm	OD mm	SLR mm	RC mm	SRI	Rim	Permitted rims	Type	Speed Km/h	PRESSURE psi bar MAX. LOAD kg
340/80R18 (12.5-18)									**50 S**	
									40 S	
									35 S	
143A8 (143B)	351	994	440	3020	475	11	W10-11SDC W11-12-12SDC	TL	30 S	
									25 S	
TH400									10 Cyc S	
									Stat S	

SIZE

TH400

11LR16	**IND**	**122A8**	
340/80R18	**IND**	**143A8 (143B)**	**(12.5-18)**
400/70R18	**IND**	**147A8 (147B)**	**(15.5/70-18)**
400/70R20	**IND**	**149A8 (149B)**	**(16.0/70-20)**
400/70R24	**IND**	**152A8 (152B)**	**(16.0/70-24)**
440/80R24	**IND**	**161A8 (161B)**	**(16.9-24)**
460/70R24	**IND**	**159A8 (159B)**	**(17.5L-24)**
500/70R24	**IND**	**164A8 (164B)**	**(19.5L-24)**
480/80R26	**IND**	**160A8 (160B)**	**(18.4-26)**
440/80R28	**IND**	**156A8 (156B)**	**(16.9-28)**

TH500

NEW	**460/70R24**	**IND**	**159A8 (159B)**	**(17.5L-24)**

17	**20**	**23**	**26**	**29**	**31**	**35**	**39**
1,2	**1,4**	**1,6**	**1,8**	**2,0**	**2,2**	**2,4**	**2,7**
900	1005	1095	1200	1305	1395	**1500**	
925	1035	1130	1235	1345	1435	1545	
965	1075	1170	1285	1395	1495	1605	
1000	1115	1215	1330	1450	1550	1665	
1240	1385	1505	1650	1795	1920	2065	2250
1900	2120	2310	2530	2755	2945	3165	3450

23	**29**	**35**	**38**	**41**	**43**	**46**	**49**	**52**	**55**	**58**	**61**	**64**
1,6	**2,0**	**2,4**	**2,6**	**2,8**	**3,0**	**3,2**	**3,4**	**3,6**	**3,8**	**4,0**	**4,2**	**4,4**
1310	1555	1775	1895	2020	2140	2265	2400	2490	2620	**2725**		
1310	1555	1775	1895	2020	2140	2265	2400	2490	2620	**2725**		
1335	1585	1810	1935	2060	2185	2310	2450	2535	2670	2780		
1365	1620	1845	1970	2100	2225	2355	2495	2585	2725	2835		
1390	1650	1880	2010	2140	2270	2400	2545	2635	2775	2890		
1590	1980	2315	2505	2670	2820	2990	3215	3380	3550	3735	3900	4090
2435	3035	3550	3835	4095	4325	4580	4925	5180	5440	5725	5995	6270

SIZE	SW mm	OD mm	SLR mm	RC mm	SRI	Rim	Permitted rims	Type	Speed Km/h	PRESSURE psi bar MAX. LOAD kg
400/70R18 (15.5/70-18) 147A8 (147B) **TH400**	403	1010	450	3040	475	13	12 - 12SDC	TL	**50 S**	
									40 S	
									35 S	
									30 S	
									25 S	
									10 Cyc S	
									Stat S	

SIZE	SW mm	OD mm	SLR mm	RC mm	SRI	Rim	Permitted rims	Type	Speed Km/h	PRESSURE psi bar MAX. LOAD kg
400/70R20 (16.0/70-20) 149A8 (149B) **TH400**	395	1065	475	3200	525	13	12 - 12SDC 13SDC - 14	TL	**50 S**	
									40 S	
									35 S	
									30 S	
									25 S	
									10 Cyc S	
									Stat S	

SIZE	SW mm	OD mm	SLR mm	RC mm	SRI	Rim	Permitted rims	Type	Speed Km/h	PRESSURE psi bar MAX. LOAD kg
400/70R24 (16.0/70-24) 152A8 (152B) **TH400**	400	1165	520	3520	575	DW13	DW14L - W14L	TL	**50 S**	
									40 S	
									35 S	
									30 S	
									25 S	
									10 Cyc S	
									Stat S	

SIZE	SW mm	OD mm	SLR mm	RC mm	SRI	Rim	Permitted rims	Type	Speed Km/h	PRESSURE psi bar MAX. LOAD kg
440/80R24 (16.9-24) 161A8 (161B) **TH400**	457	1312	585	3975	625	DW14L	DW15L - 14 TW14L	TL	**50 S**	
									40 S	
									35 S	
									30 S	
									25 S	
									10 Cyc S	
									Stat S	

SIZE	SW mm	OD mm	SLR mm	RC mm	SRI	Rim	Permitted rims	Type	Speed Km/h	PRESSURE psi bar MAX. LOAD kg
460/70R24 (17.5L-24) 159A8 (159B) **TH400**	465	1250	555	3790	600	DW15L	DW14L-DW16L 14-TW14L	TL	**50 S**	
									40 S	
									35 S	
									30 S	
									25 S	
									10 Cyc S	
									Stat S	

23	29	35	38	41	43	46	49	52	55	58	61	64
1,6	2,0	2,4	2,6	2,8	3,0	3,2	3,4	3,6	3,8	4,0	4,2	4,4
1480	1755	2000	2140	2280	2415	2555	2710	2805	2955	**3075**		
1480	1755	2000	2140	2280	2415	2555	2710	2805	2955	**3075**		
1510	1790	2040	2180	2325	2465	2605	2765	2865	3015	3140		
1540	1825	2080	2225	2370	2515	2655	2815	2920	3075	3200		
1565	1860	2120	2270	2415	2560	2710	2870	2975	3130	3260		
1795	2235	2615	2825	3015	3185	3375	3625	3815	4005	4215	4400	4615
2745	3425	4005	4330	4620	4880	5170	5555	5845	6135	6460	6765	7075

23	29	35	38	41	43	46	49	52	55	58	61	64
1,6	2,0	2,4	2,6	2,8	3,0	3,2	3,4	3,6	3,8	4,0	4,2	4,4
1560	1855	2115	2260	2405	2555	2700	2860	2965	3120	**3250**		
1560	1855	2115	2260	2405	2555	2700	2860	2965	3120	**3250**		
1595	1890	2155	2305	2455	2605	2755	2920	3025	3185	3315		
1625	1930	2200	2350	2505	2655	2810	2975	3085	3245	3380		
1655	1965	2240	2395	2550	2705	2860	3035	3145	3310	3445		
1895	2360	2765	2985	3185	3365	3565	3830	4030	4230	4455	4650	4875
2905	3620	4235	4575	4880	5155	5460	5870	6180	6485	6825	7150	7475

23	29	35	38	41	43	46	49	52	55	58	61	64
1,6	2,0	2,4	2,6	2,8	3,0	3,2	3,4	3,6	3,8	4,0	4,2	4,4
1705	2025	2310	2470	2630	2790	2950	3125	3240	3410	**3550**		
1705	2025	2310	2470	2630	2790	2950	3125	3240	3410	**3550**		
1740	2065	2355	2520	2680	2845	3010	3190	3305	3480	3625		
1775	2105	2400	2570	2735	2900	3065	3250	3370	3545	3695		
1810	2145	2450	2620	2785	2955	3125	3315	3435	3615	3765		
2070	2580	3020	3260	3480	3675	3895	4185	4405	4625	4865	5080	5325
3170	3955	4625	4995	5335	5630	5965	6415	6750	7085	7455	7810	8165

23	29	35	38	41	43	46	49	52	55	58	61	64
1,6	2,0	2,4	2,6	2,8	3,0	3,2	3,4	3,6	3,8	4,0	4,2	4,4
2220	2640	3010	3215	3425	3635	3840	4070	4220	4440	**4625**		
2220	2640	3010	3215	3425	3635	3840	4070	4220	4440	**4625**		
2265	2690	3070	3280	3495	3705	3920	4155	4305	4530	4720		
2310	2745	3130	3345	3560	3780	3995	4235	4390	4620	4810		
2355	2795	3190	3410	3630	3850	4070	4315	4475	4710	4905		
2695	3360	3930	4250	4535	4785	5070	5450	5735	6020	6340	6615	6940
4130	5150	6025	6510	6945	7335	7770	8355	8790	9230	9715	10175	10640

23	29	35	38	41	43	46	49	52	55	58	61	64
1,6	2,0	2,4	2,6	2,8	3,0	3,2	3,4	3,6	3,8	4,0	4,2	4,4
2100	2495	2845	3045	3240	3435	3635	3850	3990	4200	**4375**		
2100	2495	2845	3045	3240	3435	3635	3850	3990	4200	**4375**		
2145	2545	2905	3105	3305	3505	3705	3930	4070	4285	4465		
2185	2595	2960	3165	3370	3575	3780	4005	4150	4370	4550		
2230	2645	3015	3225	3435	3645	3850	4085	4230	4455	4640		
2550	3180	3720	4020	4290	4530	4795	5155	5425	5695	5995	6260	6565
3905	4870	5700	6160	6570	6940	7350	7905	8315	8730	9190	9625	10065

SIZE	SW mm	OD mm	SLR mm	RC mm	SRI	Rim	Permitted rims	Type	Speed Km/h	PRESSURE psi bar MAX. LOAD kg
500/70R24 (19.5L-24) 164A8 (164B) **TH400**	495	1302	580	3940	625	DW16L	DW15L - 16	TL	**50 S**	
									40 S	
									35 S	
									30 S	
									25 S	
									10 Cyc S	
									Stat S	

SIZE	SW mm	OD mm	SLR mm	RC mm	SRI	Rim	Permitted rims	Type	Speed Km/h	PRESSURE psi bar MAX. LOAD kg
480/80R26 (18.4-26) 160A8 (160B) **TH400**	495	1425	630	4315	675	DW15L	DW16L	TL	**50 S**	
									40 S	
									35 S	
									30 S	
									25 S	
									10 Cyc S	
									Stat S	

SIZE	SW mm	OD mm	SLR mm	RC mm	SRI	Rim	Permitted rims	Type	Speed Km/h	PRESSURE psi bar MAX. LOAD kg
440/80R28 (16.9-28) 156A8 (156B) **TH400**	457	1418	633	4295	675	DW14L	DW15L	TL	**50 S**	
									40 S	
									35 S	
									30 S	
									25 S	
									10 Cyc S	
									Stat S	

SIZE	SW mm	OD mm	SLR mm	RC mm	SRI	Rim	Permitted rims	Type	Speed Km/h	PRESSURE psi bar MAX. LOAD kg
460/70R24 159A8 (159B) **TH500**	470	1250	560	3735	600	DW15L	DW14L DW16L TW14L	TL	**50 S**	
									40 S	
									35 S	
									30 S	
									25 S	
									10 Cyc S	
									Stat S	

23	29	35	38	41	43	46	49	52	55	58	61	64
1,6	2,0	2,4	2,6	2,8	3,0	3,2	3,4	3,6	3,8	4,0	4,2	4,4
2400	2850	3250	3475	3700	3925	4150	4400	4560	4800	**5000**		
2400	2850	3250	3475	3700	3925	4150	4400	4560	4800	**5000**		
2450	2910	3315	3545	3775	4005	4235	4490	4655	4900	5100		
2500	2965	3380	3615	3850	4085	4320	4580	4745	4995	5200		
2545	3025	3445	3685	3925	4165	4400	4665	4835	5090	5300		
2915	3635	4250	4590	4900	5175	5480	5895	6200	6510	6850	7150	7500
4465	5565	6510	7035	7510	7930	8400	9030	9505	9975	10500	11000	11500

23	26	29	32	35	38	41	43	46	49	52
1,6	1,8	2,0	2,2	2,4	2,6	2,8	3,0	3,2	3,4	3,6
2610	2835	3060	3310	3555	3780	4005	4255	**4500**		
2610	2835	3060	3310	3555	3780	4005	4255	**4500**		
2665	2895	3125	3375	3630	3860	4090	4340	4590		
2715	2950	3185	3440	3700	3935	4170	4425	4680		
2770	3010	3245	3510	3770	4010	4250	4510	4770		
3240	3580	3915	4285	4655	4995	5365	5800	6165	6435	6750
4965	5485	6005	6570	7135	7655	8225	8885	9450	9900	10350

23	26	29	32	35	38	41	43	46	49	52
1,6	1,8	2,0	2,2	2,4	2,6	2,8	3,0	3,2	3,4	3,6
2320	2520	2720	2940	3160	3360	3560	3780	**4000**		
2320	2520	2720	2940	3160	3360	3560	3780	**4000**		
2370	2575	2775	3000	3225	3430	3635	3860	4080		
2415	2625	2830	3060	3290	3495	3705	3935	4160		
2460	2675	2885	3120	3350	3565	3775	4010	4240		
2880	3180	3480	3810	4140	4440	4770	5155	5480	5720	6000
4410	4875	5335	5840	6345	6805	7310	7900	8400	8800	9200

23	29	35	38	41	44	46	49	52	55	58	61	64
1,6	2,0	2,4	2,6	2,8	3,0	3,2	3,4	3,6	3,8	4,0	4,2	4,4
2100	2495	2845	3045	3240	3435	3635	3850	3990	4200	**4375**		
2100	2495	2845	3045	3240	3435	3635	3850	3990	4200	**4375**		
2145	2545	2905	3105	3305	3505	3705	3930	4070	4285	4465		
2185	2595	2960	3165	3370	3575	3780	4005	4150	4370	4550		
2230	2645	3015	3225	3435	3645	3850	4085	4230	4455	4640		
2550	3180	3720	4020	4290	4530	4795	5155	5425	5695	5995	6260	6565
3905	4870	5700	6160	6570	6940	7350	7905	8315	8730	9190	9625	10065

For technical notes about pressure tables please refer to page 244.

TB40

New Trelleborg backhoes range.
Designed for construction utility and industrial application.
Product plus:
- excellent wear resistance
- sturdy tread pattern
- robust sidewall
- great stability on hard and tough soils

SIZE	New tire		Tire in service		SLR	RC	Rim	Type	Speed	PRESSURE
	SW mm	OD mm	SW mm	OD mm	mm	mm			Km/h	psi / bar / MAX. LOAD kg
320/80-18 IND (12.5-18)	308	987	334	1005	445	2980	DW9	TL	50	
									40	
									30	
139A8									20	
									10	
TB40									5	

SIZE	New tire		Tire in service		SLR	RC	Rim	Type	Speed	PRESSURE
	SW mm	OD mm	SW mm	OD mm	mm	mm			Km/h	psi / bar / MAX. LOAD kg
340/80-18 IND	350	1005	370	1025	450	3055	11	TL	50	
									40	
									30	
143A8									20	
									10	
TB40									5	

SIZE	New tire		Tire in service		SLR	RC	Rim	Type	Speed	PRESSURE
	SW mm	OD mm	SW mm	OD mm	mm	mm			Km/h	psi / bar / MAX. LOAD kg
440/80-28 IND (16.9-28)	436	1418	488	1465	637	4312	DW15L	TL	50	
									40	
									30	
156A8									20	
									10	
TB40									5	

SIZE			
320/80-18	IND R-4	139A8	(12.5-18)
340/80-18	IND R-4	143A8	
440/80-28	IND R-4	156A8	(16.9-28)

17 1,2	23 1,6	29 2,0	35 2,4	41 2,8	46 3,2	51 3,5	58 4,0
860	1060	1260	1435	1635	1835	1970	2210
950	1165	1385	1580	1800	2015	2165	**2430**
985	1215	1440	1645	1870	2100	2250	2525
1035	1270	1510	1720	1960	2200	2355	2650
1185	1460	1730	1975	2250	2520	2705	3040
1375	1690	2010	2290	2605	2925	3135	3525

17 1,2	23 1,6	29 2,0	35 2,4	41 2,8	46 3,2	51 3,5	58 4,0
965	1190	1415	1610	1835	2060	2205	2480
1065	1310	1555	1770	2015	2260	2425	**2725**
1105	1360	1615	1840	2095	2350	2520	2835
1160	1425	1695	1930	2200	2465	2645	2970
1330	1635	1940	2215	2520	2825	3030	3405
1540	1895	2250	2570	2925	3280	3515	3950

12 0,8	14 1,0	17 1,2	23 1,6	29 2,0	35 2,4	38 2,6	41 2,8	43 3,0	46 3,2
1340	1535	1725	2105	2490	2875	3065	3255	3450	3640
1475	1685	1895	2315	2735	3160	3370	3580	3790	**4000**
1535	1750	1970	2410	2845	3285	3505	3720	3940	4160
1605	1835	2065	2525	2985	3440	3670	3900	4130	4360
1840	2105	2370	2895	3420	3945	4210	4475	4735	5000
2135	2440	2745	3360	3975	4580	4885	5190	5495	5800

For technical notes about pressure tables please refer to page 244.

T440 EXC

T480 EXC

T459

SIZE	SW mm	OD mm	SLR mm	RC mm	SRI mm	Rim	Permitted rim	Type	Speed Km/h	PRESSURE psi / bar / MAX. LOAD kg
600/50-22.5 173A8 **T480 EXC**	620	1180			550	AG20.00		TL	50	
									40	
									10	
									0	

SIZE	SW mm	OD mm	SLR mm	RC mm	SRI mm	Rim	Permitted rim	Type	Speed Km/h	PRESSURE psi / bar / MAX. LOAD kg
650/45-22.5 175A8 **T440 EXC**	650	1160			550	AG20.00	AG22.00 AG24.00	TL	50	
									40	
									10	
									0	

T440 EXC - T480 EXC - T459
Recommended for excavators, loaders and for machines in urban and industrial operations. Good grip and braking capability on hard surfaces.

SIZE		
600/50-22.5	173A8	T480 EXC
650/45-22.5	175A8	T440 EXC
710/40-22.5	176A8	T480 EXC
620/60B34	175A8	T459
600/65-34	175A8	T440 LD SB

23	29	35	39	43	46	51	55	58	61	65	68	72	75	78	81	84	87
1,6	2,0	2,4	2,7	3,0	3,2	3,5	3,8	4,0	4,2	4,5	4,7	5,0	5,2	5,4	5,6	5,8	6,0
2060	2400	2725	2995	3270	3450	3705	3960	4125	4325	4630	4840	5150	5320	5490	5660	5830	6000
2240	2625	3000	3285	3565	3750	4075	4405	4625	4820	5115	5310	5600	5785	5965	6145	6320	**6500**
2870	3330	3780	4120	4455	4680	5070	5465	5730	5965	6315	6550	6900	7120	7335	7550	7765	7975
5150	6035	6900	7555	8200	8625	9370	10130	10640	11090	11760	12210	12880	13300	13715	14130	14540	14950

23	29	35	43	51	58	65	72	78	84	87
1,6	2,0	2,4	3,0	3,5	4,0	4,5	5,0	5,4	5,8	6,0
2120	2465	2800	3360	3815	4250	4770	5300	5645	5980	6150
2360	2725	3075	3675	4200	4750	5275	5800	6240	6680	**6900**
3025	3460	3875	4595	5225	5885	6515	7145	7670	8200	8470
5430	6275	7075	8455	9660	10925	12130	13340	14345	15360	15870

SIZE	SW mm	OD mm	SLR mm	RC mm	SRI mm	Rim	Permitted rim	Type	Speed Km/h	PRESSURE psi / bar / MAX. LOAD kg
710/40-22.5 176A8 **T480 EXC**	710	1170			550	AG24.00		TL	50	
									40	
									10	
									0	

SIZE	SW mm	OD mm	SLR mm	RC mm	SRI mm	Rim	Permitted rim	Type	Speed Km/h	PRESSURE psi / bar / MAX. LOAD kg
620/60B34 175A8 **T459**	625	1608	675	1660	750	4860	DW20B	TL	50	
									40	
									10	
									0	

SIZE	SW mm	OD mm	SLR mm	RC mm	SRI mm	Rim	Permitted rim	Type	Speed Km/h	PRESSURE psi / bar / MAX. LOAD kg
600/65-34 175A8 **T440 LD SB**	600	1650	630	1690	765	5070	DW20A	TL	50 S	
									40 S	
									30 S	
									20 S	
									10 S	
									10 Cyc S	
									Stat S	

23	29	35	39	43	46	51	55	58	61	65	68	72	75	78	81	84	87
1,6	2,0	2,4	2,7	3,0	3,2	3,5	3,8	4,0	4,2	4,5	4,7	5,0	5,2	5,4	5,6	5,8	6,0
2180	2545	2900	3180	3465	3650	3965	4285	4500	4690	4975	5165	5450	5660	5865	6075	6290	6500
2430	2800	3150	3470	3785	4000	4325	4655	4875	5100	5435	5660	6000	6220	6440	6660	6880	**7100**
3115	3555	3970	4350	4735	4990	5385	5775	6040	6310	6715	6985	7395	7655	7920	8185	8450	8715
5590	6440	7245	7975	8710	9200	9950	10710	11215	11725	12500	13020	13800	14305	14810	15315	15825	16330

12	14	17	20	23	26	29	32	35	38	41	43	46	49	52	55	58
0,8	1,0	1,2	1,4	1,6	1,8	2,0	2,2	2,4	2,6	2,8	3,0	3,2	3,4	3,6	3,8	4,0
1955	2230	2510	2790	3075	3315	3550	3780	4000	4285	4570	4860	5150	5400	5655	5900	6150
2145	2450	2760	3065	3350	3640	3930	4215	4500	4780	5055	5330	5600	5920	6245	6570	**6900**
2850	3220	3585	3955	4295	4640	4985	5330	5670	6005	6335	6660	6985	7370	7760	8155	8550
4935	5640	6345	7050	7705	8375	9040	9695	10350	10990	11625	12255	12880	13620	14360	15115	15870

12	14	17	20	23	26	29	32	35	38	41	43	46	49	52	55	58
0,8	1,0	1,2	1,4	1,6	1,8	2,0	2,2	2,4	2,6	2,8	3,0	3,2	3,4	3,6	3,8	4,0
1910	2185	2455	2730	3005	3275	3550	3820	4095	4370	4640	4915	5185	5460	5735	6005	6280
2100	2400	2700	3000	3300	3600	3900	4200	4500	4800	5100	5400	5700	6000	6300	6600	**6900**
2185	2495	2810	3120	3430	3745	4055	4370	4680	4990	5305	5615	5930	6240	6550	6865	7175
2290	2615	2945	3270	3595	3925	4250	4580	4905	5230	5560	5885	6215	6540	6865	7195	7520
2625	3000	3375	3750	4125	4500	4875	5250	5625	6000	6375	6750	7125	7500	7875	8250	8625
3150	3600	4050	4500	4950	5400	5850	6300	6750	7200	7650	8100	8550	9000	9450	9900	10350
4830	5520	6210	6900	7590	8280	8970	9660	10350	11040	11730	12420	13110	13800	14490	15180	15870

For technical notes about pressure tables please refer to page 244.

Light service tires

A large range of tires from 3” to 15” in rim diameter in different sizes and tread designs. These tires can be used in farming, industrial and green area applications. Trelleborg offers a complete wheel solution.

DRIVER

Green area tire for professional use.

GARDENER

Green area tire for hobby machines.

T49

High Speed tire with high shoulder profile.

T63

Farming tire with traction pattern.

T94

Industry tire with combined pattern.

T310

Farming tire increasing efficiency during working operations due to its optimized groove depth and a smoother shape

T411

Combined pattern for green area and farming.

T412

Combined pattern for green area and farming.

T413

Combined pattern for green area and farming.

T415

Tire for small compact machines used for digging, drilling and loading.

T421

Farming tire for ploughing and for mini loader.

T430

Tire for agriculture and green areas with rounded shoulder profile for small dumpers and mini loaders

T446

Farming tire with easy rolling pattern.

T448

Farming tire with extra strong tread and easy rolling pattern.

T462

Farming tire with traction pattern.

T463

Combined tire for farming and green area.

T501

High speed tire with easy rolling pattern.

T510

Farming tire with easy rolling pattern.

T513

Farming tire with extra good sidewall stability.

T521

Smooth pattern tire for green area.

T522

Industry, farming and green area tire with smooth pattern.

T523

High Speed or industry tire with high shoulder.

T528

Tire especially made for snow machines.

T530

Industry tire with good grip and low roll resistance.

T533

High Speed tire with combined pattern.

T536

Farming tire with combined pattern.

T537

Combined tire for green area, farming and industry.

T539

Combined tire for green area, farming, industry or high speed service.

T550

Skid Steer tire with good grip and comfort.

T559 Turf Grip

Combined tire for green area, farming and industry.

T560 ICE

For detachable chairlifts. Designed to perfectly work at very low temperature.

T570

Skid Steer tire with good grip and comfort and long lifespan.

T690

High Speed tire with high shoulder.

T991

Industry and farming tire with rounded shoulder.

HIGH GRIP

Tire for green areas with good grip.

TRACTION

Farming tire with good grip.

TIRES 4”

SIZE	PR/LI	Tread pattern	Main range of use	Rim size	Permitted rims	OD mm +/-1,5%	SW mm +/-2%	Max. air pressure bar	Max. load kg	Speed (km/h)	RC mm +/-2,5%
3.00-4	4	**T991**	Farming	2.10	2.5	260	88	3,5	105	30	772

PRESSURE																			
psi	**7**	**12**	**14**	**17**	**20**	**23**	**26**	**29**	**32**	**35**	**38**	**41**	**43**	**46**	**51**	**55**	**61**	**64**	**67**
bar	**0,5**	**0,8**	**1,0**	**1,2**	**1,4**	**1,6**	**1,8**	**2,0**	**2,2**	**2,4**	**2,6**	**2,8**	**3,0**	**3,2**	**3,5**	**3,8**	**4,2**	**4,4**	**4,6**
MAX. LOAD kg																			
40 FR	30	40	45	50	55	60	65	70	72	75	80	82	85	90	95				
30 FR	35	45	50	55	60	65	70	75	80	85	90	92	95	100	**105**				
10 FR	45	60	65	70	75	85	90	95	105	110	115	117	125	130	135				
40 DrW	23	25	30	35	40	42	45	50	52	55	57	60	65	67	70				
30 DrW	25	30	35	40	45	47	50	55	57	60	62	65	70	72	**75**				
10 DrW	30	40	45	50	60	62	65	70	72	75	80	85	90	92	95				
10C	40	45	55	65	70	75	80	85	90	95	100	105	110	115	120	123	127	130	135

SIZE	PR/LI	Tread pattern	Main range of use	Rim size	Permitted rims	OD mm +/-1,5%	SW mm +/-2%	Max. air pressure bar	Max. load kg	Speed (km/h)	RC mm +/-2,5%
3.00-4	6	**T991**	Farming	2.10	2.5	260	88	5,0	135	30	772

PRESSURE														
psi	**7**	**14**	**19**	**25**	**29**	**33**	**39**	**43**	**48**	**54**	**58**	**62**	**68**	**72**
bar	**0,5**	**1,0**	**1,3**	**1,7**	**2,0**	**2,3**	**2,7**	**3,0**	**3,3**	**3,7**	**4,0**	**4,3**	**4,7**	**5,0**
MAX. LOAD kg														
40 FR	30	50	55	65	70	75	85	90	95	105	110	115	117	120
30 FR	35	55	60	70	80	85	95	100	105	115	120	125	130	**135**
10 FR	45	70	75	90	105	110	125	130	135	150	155	160	170	175
40 DrW	20	30	40	45	50	55	60	65	70	72	75	77	80	85
30 DrW	25	35	45	50	55	60	65	70	75	80	85	87	90	**95**
10 DrW	30	45	60	65	70	75	85	90	95	105	110	112	114	115

SIZE	PR/LI	Tread pattern	Main range of use	Rim size	Permitted rims	OD mm +/-1,5%	SW mm +/-2%	Max. air pressure bar	Max. load kg	Speed (km/h)	RC mm +/-2,5%
3.00-4	6	**T530**	Industrial	2.10	2.5	252	83	6,0	200	25	751

PRESSURE												
psi	**14**	**22**	**29**	**36**	**43**	**51**	**58**	**65**	**72**	**80**	**87**
bar	**1,0**	**1,5**	**2,0**	**2,5**	**3,0**	**3,5**	**4,0**	**4,5**	**5,0**	**5,5**	**6,0**
MAX. LOAD kg											
50	60	75	90	100	115	120	135	145	150	160	170
40	60	80	95	105	120	130	140	150	160	170	180
25	70	90	105	120	135	145	160	170	180	190	**200**
10	90	115	135	155	175	190	210	220	235	245	260

SIZE	PR/LI	Tread pattern	Main range of use	Rim size	Permitted rims	OD mm +/-1,5%	SW mm +/-2%	Max. air pressure bar	Max. load kg	Speed (km/h)	RC mm +/-2,5%
4.00-4	6	**T991**	Farming	2.50C	3.00	312	113	4,25	190	30	927

PRESSURE																		
psi	**7**	**12**	**14**	**17**	**20**	**23**	**26**	**29**	**32**	**35**	**38**	**41**	**43**	**46**	**49**	**52**	**55**	**58**	**62**
bar	**0,5**	**0,8**	**1,0**	**1,2**	**1,4**	**1,6**	**1,8**	**2,0**	**2,2**	**2,4**	**2,6**	**2,8**	**3,0**	**3,2**	**3,4**	**3,6**	**3,8**	**4,0**	**4,2**
MAX. LOAD kg																			
40 FR	50	65	70	80	90	95	105	110	115	120	130	135	140	145	150	155	160	165	170
30 FR	55	70	80	90	100	105	115	120	130	135	145	150	155	160	165	170	180	185	**190**
10 FR	70	90	105	115	130	135	150	155	170	175	185	195	200	205	215	220	230	240	245
40 DrW	35	45	50	60	65	70	72	75	80	85	90	95	100	105	107	110	115	117	120
30 DrW	40	50	55	65	70	75	80	85	90	95	100	105	110	115	117	120	125	130	**135**
10 DrW	50	65	70	85	90	95	105	110	115	125	130	135	140	150	152	155	160	170	175

SIZE	PR/LI	Tread pattern	Main range of use	Rim size	Permitted rims	OD mm +/-1,5%	SW mm +/-2%	Max. air pressure bar	Max. load kg	Speed (km/h)	RC mm +/-2,5%
4.10/3.50-4	6	**T539**	Industrial	2.10		272	89	6,9	210	25	808

PRESSURE													
psi	**14**	**22**	**29**	**36**	**43**	**51**	**58**	**65**	**72**	**80**	**87**	**94**	**100**
bar	**1,0**	**1,5**	**2,0**	**2,5**	**3,0**	**3,5**	**4,0**	**4,5**	**5,0**	**5,5**	**6,0**	**6,5**	**6,9**
MAX. LOAD kg													
50	60	70	85	95	110	120	130	140	145	155	165	170	175
40	65	75	90	100	115	125	140	145	155	165	175	180	185
25	70	85	100	115	130	140	155	165	175	185	195	205	**210**
10	90	110	130	150	170	180	200	215	230	240	255	265	275

SIZE	PR/LI	Tread pattern	Main range of use	Rim size	Permitted rims	OD mm +/-1,5%	SW mm +/-2%	Max. air pressure bar	Max. load kg	Speed (km/h)	RC mm +/-2,5%
4.10-4	4	**T510**	Farming	2.10C	3.25A	276	104	2,8	165	30	820

PRESSURE												
psi	**7**	**12**	**14**	**17**	**20**	**23**	**26**	**29**	**32**	**35**	**38**	**41**
bar	**0,5**	**0,8**	**1,0**	**1,2**	**1,4**	**1,6**	**1,8**	**2,0**	**2,2**	**2,4**	**2,6**	**2,8**
MAX. LOAD kg												
40	55	70	80	90	100	110	115	120	130	135	145	150
30	60	80	90	100	110	120	125	135	145	150	160	**165**
10	75	105	115	130	140	155	160	175	185	195	205	215

SIZE	PR/LI	Tread pattern	Main range of use	Rim size	Permitted rims	OD mm +/-1,5%	SW mm +/-2%	Max. air pressure bar	Max. load kg	Speed (km/h)	RC mm +/-2,5%
11x4.00-4	2	**T537S TL**	Green Area	2.75A	3.25A	262	101	1,5	100	25	778

PRESSURE											
psi	**7**	**9**	**10**	**12**	**13**	**14**	**16**	**17**	**19**	**20**	**22**
bar	**0,5**	**0,6**	**0,7**	**0,8**	**0,9**	**1,0**	**1,1**	**1,2**	**1,3**	**1,4**	**1,5**
MAX. LOAD kg											
40	45	50	55	60	65	67	70	75	80	85	90
25	50	55	65	70	75	77	80	85	90	95	**100**
15	55	70	75	80	85	87	90	95	105	110	115
10	60	65	80	85	90	92	95	105	110	115	120

SIZE	PR/LI	Tread pattern	Main range of use	Rim size	Permitted rims	OD mm +/-1,5%	SW mm +/-2%	Max. air pressure bar	Max. load kg	Speed (km/h)	RC mm +/-2,5%
100/100-4	60A8/48A8	**T539**	Industrial	2.5		304	98	6,0	250	40	908

PRESSURE																				
psi	**12**	**17**	**23**	**29**	**35**	**41**	**46**	**52**	**58**	**61**	**64**	**67**	**70**	**72**	**75**	**78**	**81**	**84**	**87**
bar	**0,8**	**1,2**	**1,6**	**2,0**	**2,4**	**2,8**	**3,2**	**3,6**	**4,0**	**4,2**	**4,4**	**4,6**	**4,8**	**5,0**	**5,2**	**5,4**	**5,6**	**5,8**	**6,0**
MAX. LOAD kg																			
50 FR	65	85	100	120	135	155	165	185	200	203	207	210	212	215	217	220	222	223	225
40 FR	75	95	110	130	150	170	185	205	220	225	230	233	235	235	237	240	245	247	**250**
10 FR	95	120	145	165	190	210	235	255	280	290	305	315	317	320	322	325	330	332	335
50 DrW	45	60	70	85	95	105	115	130	140	145	147	150	152	153	154	155	156	158	160
40 DrW	50	65	80	95	105	120	130	145	160	162	165	167	170	172	173	175	177	178	**180**
10 DrW	65	85	100	120	135	150	165	180	195	205	215	225	227	230	235	237	238	239	240

TIRES 6”

SIZE	PR/LI	Tread pattern	Main range of use	Rim size	Permitted rims	OD mm +/-1,5%	SW mm +/-2%	Max. air pressure bar	Max. load kg	Speed (km/h)	RC mm +/-2,5%
3.50-6	4	**T510**	Farming	2.50A	2.50C	341	100	3,0	165	30	1013

PRESSURE													
psi	**7**	**12**	**14**	**17**	**20**	**23**	**26**	**29**	**32**	**35**	**38**	**41**	**43**
bar	**0,5**	**0,8**	**1,0**	**1,2**	**1,4**	**1,6**	**1,8**	**2,0**	**2,2**	**2,4**	**2,6**	**2,8**	**3,0**
MAX. LOAD kg													
40	55	70	75	85	95	105	110	115	125	130	135	145	150
30	60	75	85	95	105	115	120	130	140	145	150	160	**165**
10	75	95	110	125	135	150	155	170	180	185	195	205	215

SIZE	PR/LI	Tread pattern	Main range of use	Rim size	Permitted rims	OD mm +/-1,5%	SW mm +/-2%	Max. air pressure bar	Max. load kg	Speed (km/h)	RC mm +/-2,5%
4.00-6	6	**T991**	Farming	2.50A		358	108	4,3	250	30	1063

PRESSURE																			
psi	**14**	**17**	**20**	**23**	**26**	**29**	**32**	**35**	**38**	**41**	**43**	**46**	**49**	**52**	**55**	**58**	**61**	**62**
bar	**1,0**	**1,2**	**1,4**	**1,6**	**1,8**	**2,0**	**2,2**	**2,4**	**2,6**	**2,8**	**3,0**	**3,2**	**3,4**	**3,6**	**3,8**	**4,0**	**4,2**	**4,3**
MAX. LOAD kg																		
40 FR	95	110	115	125	135	145	155	160	165	175	185	190	200	205	210	215	220	225
30 FR	105	120	130	140	150	160	170	180	185	195	205	210	220	225	235	240	245	**250**
10 FR	135	155	170	180	195	205	220	230	240	250	265	270	285	290	305	310	315	325
40 DrW	70	75	80	90	95	100	110	115	117	120	125	130	140	145	150	155	157	160
30 DrW	75	85	90	100	105	110	120	125	130	135	140	145	155	160	165	170	172	**175**
10 DrW	95	110	115	130	135	140	155	160	170	175	180	185	200	205	215	220	222	225

SIZE	PR/LI	Tread pattern	Main range of use	Rim size	Permitted rims	OD mm +/-1,5%	SW mm +/-2%	Max. air pressure bar	Max. load kg	Speed (km/h)	RC mm +/-2,5%
4.10/3.50-6	57J	**T533 HS**	High Speed	2.50A-6		320	94	4,5	230	100	950

PRESSURE									
psi	**7**	**15**	**22**	**29**	**36**	**44**	**51**	**58**	**65**
bar	**0,5**	**1**	**1,5**	**2**	**2,5**	**3**	**3,5**	**4**	**4,5**
MAX. LOAD kg									
100	65	95	120	145	165	180	200	215	**230**
80	68	100	125	150	170	185	210	225	240
60	70	105	130	160	180	200	220	235	255
40	75	110	140	165	190	205	230	245	265
30	80	120	150	180	205	225	250	270	**290**
20	100	145	180	220	250	270	300	325	345
10	115	170	215	260	295	325	360	385	415

SIZE	PR/LI	Tread pattern	Main range of use	Rim size	Permitted rims	OD mm +/-1,5%	SW mm +/-2%	Max. air pressure bar	Max. load kg	Speed (km/h)	RC mm +/-2,5%
13x5.00-6	2	**GARDENER**	Green Area	3.50		325	120	1,4	132	30	962

SIZE	PR/LI	Tread pattern	Main range of use	Rim size	Permitted rims	OD mm +/-1,5%	SW mm +/-2%	Max. air pressure bar	Max. load kg	Speed (km/h)	RC mm +/-2,5%
13x5.00-6	4	**T539 TL**	Green Area	3.50A		322	117	2,8	200	30	956

PRESSURE						
psi	**12**	**17**	**23**	**29**	**35**	**41**
bar	**0,8**	**1,2**	**1,6**	**2,0**	**2,4**	**2,8**
MAX. LOAD kg						
40	75	95	120	135	160	180
35	80	105	125	145	165	190
30	85	110	130	150	175	**200**
25	90	115	140	165	190	215
20	95	125	150	175	200	230
15	100	130	160	185	215	240
10	110	140	170	195	225	260
0	140	180	220	250	290	330

SIZE	PR/LI	Tread pattern	Main range of use	Rim size	Permitted rims	OD mm +/-1,5%	SW mm +/-2%	Max. air pressure bar	Max. load kg	Speed (km/h)	RC mm +/-2,5%
13x5.00-6	6	**T539 TL**	Industrial	3.50A		320	122	4,1	250	30	989

PRESSURE								
psi	**12**	**23**	**29**	**35**	**41**	**46**	**52**	**59**
bar	**0,8**	**1,6**	**2,0**	**2,4**	**2,8**	**3,2**	**3,6**	**4,1**
MAX. LOAD kg								
40	70	115	135	155	175	195	205	225
35	75	120	140	160	185	210	215	240
30	80	130	150	170	195	220	230	**250**
25	85	135	160	180	205	225	245	270
20	90	145	170	195	220	235	260	285
15	95	155	180	205	235	250	275	305
10	105	165	190	220	250	270	295	325
0	130	210	245	280	320	340	375	415

SIZE	PR/LI	Tread pattern	Main range of use	Rim size	Permitted rims	OD mm +/-1,5%	SW mm +/-2%	Max. air pressure bar	Max. load kg	Speed (km/h)	RC mm +/-2,5%
13x5.00-6	4	**T510 TL**	Farming	3.50A		326	119	2,8	200	30	968

PRESSURE						
psi	**12**	**17**	**23**	**29**	**35**	**41**
bar	**0,8**	**1,2**	**1,6**	**2,0**	**2,4**	**2,8**
MAX. LOAD kg						
40	75	95	120	135	160	180
35	80	105	125	145	165	190
30	85	110	130	150	175	**200**
25	90	115	140	165	190	215
20	95	125	150	175	200	230
15	100	130	160	185	215	240
10	110	140	170	195	225	260
0	140	180	220	250	290	330

SIZE	PR/LI	Tread pattern	Main range of use	Rim size	Permitted rims	OD mm +/-1,5%	SW mm +/-2%	Max. air pressure bar	Max. load kg	Speed (km/h)	RC mm +/-2,5%
13x5.00-6	6	**T510**	Farming	3.50A		326	119	4,1	250	30	955

PRESSURE								
psi	**12**	**23**	**29**	**35**	**41**	**46**	**52**	**59**
bar	**0,8**	**1,6**	**2,0**	**2,4**	**2,8**	**3,2**	**3,6**	**4,1**
MAX. LOAD kg								
40	70	115	135	155	175	195	205	225
35	75	120	140	160	185	210	215	240
30	80	130	150	170	195	220	230	**250**
25	85	135	160	180	205	225	245	270
20	90	145	170	195	220	235	260	285
15	95	155	180	205	235	250	275	305
10	105	165	190	220	250	270	295	325
0	130	210	245	280	320	340	375	415

SIZE	PR/LI	Tread pattern	Main range of use	Rim size	Permitted rims	OD mm +/-1,5%	SW mm +/-2%	Max. air pressure bar	Max. load kg	Speed (km/h)	RC mm +/-2,5%
15x6.00-6	2	**GARDENER TL**	Green Area	4.50		363	163	1,0	165	30	1070

SIZE	PR/LI	Tread pattern	Main range of use	Rim size	Permitted rims	OD mm +/-1,5%	SW mm +/-2%	Max. air pressure bar	Max. load kg	Speed (km/h)	RC mm +/-2,5%
15x6.00-6	4	**T539 Grip TL**	Green Area/Farming	4.50A		370	161	2,1	225	30	1099

PRESSURE								
psi	**7**	**12**	**14**	**17**	**20**	**23**	**26**	**29**
bar	**0,5**	**0,8**	**1,0**	**1,2**	**1,4**	**1,6**	**1,8**	**2,0**
MAX. LOAD kg								
40 FR	90	115	135	150	165	175	190	205
30 FR	100	130	150	165	185	195	210	**225**
10 FR	130	170	195	215	240	250	270	290
40 DrW	65	80	95	105	115	125	135	145
30 DrW	70	90	105	115	130	140	150	**160**
10 DrW	90	115	135	150	170	180	195	205

SIZE	PR/LI	Tread pattern	Main range of use	Rim size	Permitted rims	OD mm +/-1,5%	SW mm +/-2%	Max. air pressure bar	Max. load kg	Speed (km/h)	RC mm +/-2,5%
15x6.00-6	4	**T510 TL**	Farming	4.50A-6		368	160	2,1	257	30	1093

PRESSURE									
psi	**7**	**12**	**14**	**17**	**20**	**23**	**26**	**29**
bar	**0,5**	**0,8**	**1,0**	**1,2**	**1,4**	**1,6**	**1,8**	**2,0**
MAX. LOAD kg								
40	100	130	150	165	185	200	210	230
30	110	145	165	185	205	200	235	**257**
10	140	185	215	240	265	285	305	330

SIZE	PR/LI	Tread pattern	Main range of use	Rim size	Permitted rims	OD mm +/-1,5%	SW mm +/-2%	Max. air pressure bar	Max. load kg	Speed (km/h)	RC mm +/-2,5%
15x6.00-6	6	**T510 TT**	Farming	4.50A-6		366	162	3,8	335	30	1087

PRESSURE																	
psi	**7**	**12**	**14**	**17**	**20**	**23**	**26**	**29**	**32**	**35**	**38**	**41**	**44**	**46**	**49**	**52**	**55**
bar	**0,5**	**0,8**	**1,0**	**1,2**	**1,4**	**1,6**	**1,8**	**2,0**	**2,2**	**2,4**	**2,6**	**2,8**	**3**	**3,2**	**3,4**	**3,6**	**3,8**
MAX. LOAD kg																	
40	90	120	140	155	165	180	195	205	220	230	245	250	260	275	285	295	300
30	100	135	155	170	185	200	215	**230**	245	255	270	280	290	305	315	325	335
10	130	175	200	220	240	260	275	295	315	330	350	360	375	395	405	420	430

SIZE	PR/LI	Tread pattern	Main range of use	Rim size	Permitted rims	OD mm +/-1,5%	SW mm +/-2%	Max. air pressure bar	Max. load kg	Speed (km/h)	RC mm +/-2,5%
100/65-6	24A8	**T539 Grip TL**	Green Area	3.00A		286	96	1,6	90	40	835

PRESSURE								
psi	**7**	**12**	**14**	**17**	**20**	**23**	**25**	**26**
bar	**0,5**	**0,8**	**1,0**	**1,2**	**1,4**	**1,6**	**1,7**	**1,8**
MAX. LOAD kg								
50 FR	40	50	60	65	75	80		
40 FR	45	60	65	75	80	**90**		
10 FR	60	75	85	95	105	115	120	125
50 DrW			20	45	50	55		
40 DrW			25	50	55	**65**		
10 DrW			15	35	75	80	83	85

SIZE	PR/LI	Tread pattern	Main range of use	Rim size	Permitted rims	OD mm +/-1,5%	SW mm +/-2%	Max. air pressure bar	Max. load kg	Speed (km/h)	RC mm +/-2,5%
100/85-6	46	**T513**	Farming	2.50A-6	2.50C-6	325	105	2,8	165	30	1004

PRESSURE												
psi	**7**	**12**	**14**	**17**	**20**	**23**	**26**	**29**	**32**	**35**	**38**	**41**
bar	**0,5**	**0,8**	**1,0**	**1,2**	**1,4**	**1,6**	**1,8**	**2,0**	**2,2**	**2,4**	**2,6**	**2,8**
MAX. LOAD kg												
40 FR	55	70	85	95	105	115	115	125	135	140	150	155
30 FR	60	80	95	105	115	125	130	140	150	155	165	**170**
10 FR	75	105	125	135	150	160	170	180	195	200	215	220
40 DrW	40	50	60	65	70	75	80	90	95	100	105	110
30 DrW	45	55	65	70	80	85	90	100	105	110	115	**118**
10 DrW	60	70	85	90	105	110	115	130	135	140	150	155

SIZE	PR/LI	Tread pattern	Main range of use	Rim size	Permitted rims	OD mm +/-1,5%	SW mm +/-2%	Max. air pressure bar	Max. load kg	Speed (km/h)	RC mm +/-2,5%
140-6	6	**T539**	Farming	4.50A		328	137	4,3	260	30	974

PRESSURE													
psi	**12**	**14**	**22**	**29**	**36**	**43**	**46**	**49**	**52**	**55**	**58**	**62**
bar	**0,8**	**1,0**	**1,5**	**2,0**	**2,5**	**3,0**	**3,2**	**3,4**	**3,6**	**3,8**	**4,0**	**4,3**
MAX. LOAD kg												
40 FR	85	100	125	150	170	190	200	205	210	215	225	235
30 FR	95	110	140	165	190	210	220	225	235	240	250	**260**
10 FR	125	140	180	215	245	270	285	290	305	310	325	335
40 DrW	65	70	90	105	120	130	140	145	150	155	158	160
30 DrW	70	80	100	115	135	145	155	160	165	170	175	**180**
10 DrW	90	105	130	150	175	185	200	205	215	220	225	230

SIZE	PR/LI	Tread pattern	Main range of use	Rim size	Permitted rims	OD mm +/-1,5%	SW mm +/-2%	Max. air pressure bar	Max. load kg	Speed (km/h)	RC mm +/-2,5%
140-6	6	**T510**	Industrial	4.50A		325	134	7,0	650	25	965

PRESSURE													
psi	**14**	**22**	**29**	**36**	**43**	**51**	**58**	**65**	**72**	**80**	**87**	**94**	**101**
bar	**1,0**	**1,5**	**2,0**	**2,5**	**3,0**	**3,5**	**4,0**	**4,5**	**5,0**	**5,5**	**6,0**	**6,5**	**7,0**
MAX. LOAD kg													
50	175	225	260	300	330	365	395	420	450	475	500	520	545
40	185	235	275	315	350	385	420	445	475	505	530	550	580
25	210	265	310	355	395	435	470	500	535	565	595	620	**650**
10	275	345	405	460	515	565	610	650	695	735	775	805	845

SIZE	PR/LI	Tread pattern	Main range of use	Rim size	Permitted rims	OD mm +/-1,5%	SW mm +/-2%	Max. air pressure bar	Max. load kg	Speed (km/h)	RC mm +/-2,5%
140-6	10	**T510**	Industrial	4.50A		340	143	9,5	780	25	1004

PRESSURE																		
psi	**14**	**22**	**29**	**36**	**43**	**51**	**58**	**65**	**72**	**80**	**87**	**94**	**101**	**109**	**116**	**123**	**130**	**138**
bar	**1,0**	**1,5**	**2,0**	**2,5**	**3,0**	**3,5**	**4,0**	**4,5**	**5,0**	**5,5**	**6,0**	**6,5**	**7,0**	**7,5**	**8,0**	**8,5**	**9,0**	**9,5**
MAX. LOAD kg																		
50	175	225	265	300	330	365	395	425	450	475	500	525	545	570	590	615	635	655
40	185	235	280	315	350	385	420	450	475	505	530	555	580	605	625	650	670	695
25	210	265	315	355	395	435	470	505	535	565	595	625	650	680	705	730	755	**780**
10	275	345	410	460	515	565	610	655	695	735	775	815	845	885	915	950	980	1015

TIRES 8”

SIZE	PR/LI	Tread pattern	Main range of use	Rim size	Permitted rims	OD mm +/-1,5%	SW mm +/-2%	Max. air pressure bar	Max. load kg	Speed (km/h)	RC mm +/-2,5%
3.00-8	2	**T539 Grey**	Industrial	2.50A	2.10	358	86	2,4	140	25	1063

PRESSURE											
psi	**7**	**12**	**14**	**17**	**20**	**23**	**26**	**29**	**32**	**35**
bar	**0,5**	**0,8**	**1,0**	**1,2**	**1,4**	**1,6**	**1,8**	**2,0**	**2,2**	**2,4**
MAX. LOAD kg										
50	45	65	70	80	85	90	100	105	115	120
40	50	70	75	85	90	100	105	110	120	125
25	55	75	85	95	100	110	120	125	135	**140**
10	70	100	110	125	130	145	155	165	175	180

SIZE	PR/LI	Tread pattern	Main range of use	Rim size	Permitted rims	OD mm +/-1,5%	SW mm +/-2%	Max. air pressure bar	Max. load kg	Speed (km/h)	RC mm +/-2,5%
3.50-8	4	**T510**	Farming	2.50A	2.10	392	101	2,8	190	30	1164

PRESSURE												
psi	**7**	**12**	**14**	**17**	**20**	**23**	**26**	**29**	**32**	**35**	**38**	**41**
bar	**0,5**	**0,8**	**1,0**	**1,2**	**1,4**	**1,6**	**1,8**	**2,0**	**2,2**	**2,4**	**2,6**	**2,8**
MAX. LOAD kg												
40	65	80	95	105	115	120	130	140	150	160	165	170
30	70	90	105	115	125	135	145	155	165	175	180	**190**
10	90	115	135	150	160	175	185	200	215	225	230	245

SIZE	PR/LI	Tread pattern	Main range of use	Rim size	Permitted rims	OD mm +/-1,5%	SW mm +/-2%	Max. air pressure bar	Max. load kg	Speed (km/h)	RC mm +/-2,5%
3.50-8	4	**T513**	Farming	2.50A	2.10	399	98	2,8	190	30	1185

PRESSURE												
psi	**7**	**12**	**14**	**17**	**20**	**23**	**26**	**29**	**32**	**35**	**38**	**41**
bar	**0,5**	**0,8**	**1,0**	**1,2**	**1,4**	**1,6**	**1,8**	**2,0**	**2,2**	**2,4**	**2,6**	**2,8**
MAX. LOAD kg												
40	65	80	95	105	115	120	130	140	150	160	165	170
30	70	90	105	115	125	135	145	155	165	175	180	**190**
10	90	115	135	150	160	175	185	200	215	225	230	245

SIZE	PR/LI	Tread pattern	Main range of use	Rim size	Permitted rims	OD mm +/-1,5%	SW mm +/-2%	Max. air pressure bar	Max. load kg	Speed (km/h)	RC mm +/-2,5%
3.50-8	56J	**T501 HS**	High Speed	2.50A-8	2.1-8	500	255	4,3	224	100	1167
4.00-8	4	**T63**	Farming	2.50A	3.00	427	106	2,8	225	30	1277
	4	**T510**	Farming	2.50A	3.00	425	114	2,8	225	30	1236
	4	**T991**	Farming	2.50A	3.00	416	108	2,8	225	30	1236
	4	**T513**	Farming	2.50A	3.00	426	107	2,8	225	30	1271
	6	**T991**	Farming	2.50A	3.00	416	105	4,3	290	30	1233
	6	**T522**	Farming	2.50A	3.00	430	110	4,3	290	30	1265

SIZE	PR/LI	Tread pattern	Main range of use	Rim size	Permitted rims	OD mm +/-1,5%	SW mm +/-2%	Max. air pressure bar	Max. load kg	Speed (km/h)	RC mm +/-2,5%
4.00-8	8	**T523**	Industrial	2.50	3.00/3.75	418	123	9,0	670	25	1240

PRESSURE																	
psi	**14**	**22**	**29**	**36**	**43**	**51**	**58**	**65**	**72**	**80**	**87**	**94**	**101**	**109**	**116**	**123**	**130**
bar	**1,0**	**1,5**	**2,0**	**2,5**	**3,0**	**3,5**	**4,0**	**4,5**	**5,0**	**5,5**	**6,0**	**6,5**	**7,0**	**7,5**	**8,0**	**8,5**	**9,0**
MAX. LOAD kg																	
50	155	195	235	265	295	325	350	375	400	420	445	465	485	505	525	545	565
40	165	210	250	280	310	345	370	395	425	445	470	495	515	535	555	580	595
25	185	235	280	315	350	385	415	445	475	500	530	555	580	600	625	650	**670**
10	240	305	365	410	455	500	540	580	620	650	690	720	755	780	815	845	870

SIZE	PR/LI	Tread pattern	Main range of use	Rim size	Permitted rims	OD mm +/-1,5%	SW mm +/-2%	Max. air pressure bar	Max. load kg	Speed (km/h)	RC mm +/-2,5%
4.00-8	71J	**T49 HS**	High Speed	2.50A-8	3.00-8	423	121	6,3	345	100	1241

SIZE	PR/LI	Tread pattern	Main range of use	Rim size	Permitted rims	OD mm +/-1,5%	SW mm +/-2%	Max. air pressure bar	Max. load kg	Speed (km/h)	RC mm +/-2,5%
5.00-8	6	**T522**	Farming	3.00		450	130	3,6	387	30	1337
16x6.50-8	4	**T539 Grip TL**	Green Area	5.375I	5.50A	406	166	1,9	280	30	1206
16x6.50-8	6	**T539**	Farming	5.375I-8	5.50A-8	410	174	3,0	365	30	1218

SIZE	PR/LI	Tread pattern	Main range of use	Rim size	Permitted rims	OD mm +/-1,5%	SW mm +/-2%	Max. air pressure bar	Max. load kg	Speed (km/h)	RC mm +/-2,5%
16x6.50-8	73A8	**T510**	Farming	5.375I	5.50A	413	173	3,0	325	40	1221

PRESSURE										
psi	**7**	**12**	**17**	**23**	**29**	**32**	**35**	**38**	**41**	**44**
bar	**0,5**	**0,8**	**1,2**	**1,6**	**2,0**	**2,2**	**2,4**	**2,6**	**2,8**	**3,0**
MAX. LOAD kg										
50	115	155	195	230	260	275	290	300	315	330
40	130	170	215	255	290	305	320	335	350	**365**
30	145	190	240	285	325	340	360	375	390	410
25	155	200	255	305	345	365	380	400	415	435
20	165	215	270	320	365	385	405	420	440	460
10	180	240	300	355	405	425	450	470	490	510

SIZE	PR/LI	Tread pattern	Main range of use	Rim size	Permitted rims	OD mm +/-1,5%	SW mm +/-2%	Max. air pressure bar	Max. load kg	Speed (km/h)	RC mm +/-2,5%
16x6.50-8	73A8	**T310**	Farming	5.375I	5.50A	413	173	3,0	325	40	1221

PRESSURE											
psi	**7**	**12**	**17**	**23**	**29**	**32**	**35**	**38**	**41**	**44**
bar	**0,5**	**0,8**	**1,2**	**1,6**	**2,0**	**2,2**	**2,4**	**2,6**	**2,8**	**3,0**
MAX. LOAD kg										
50	115	155	195	230	260	275	290	300	315	330
40	130	170	215	255	290	305	320	335	350	**365**
30	145	190	240	285	325	340	360	375	390	410
25	155	200	255	305	345	365	380	400	415	435
20	165	215	270	320	365	385	405	420	440	460
10	180	240	300	355	405	425	450	470	490	510

SIZE	PR/LI	Tread pattern	Main range of use	Rim size	Permitted rims	OD mm +/-1,5%	SW mm +/-2%	Max. air pressure bar	Max. load kg	Speed (km/h)	RC mm +/-2,5%
16x6.50-8	84A8/80B	**T510**	Green Area	5.375I	5.50A	406	172	5,1	500	40	1221
	2/49A6	**GARDENER TL**	Green Area	5.375		414	168	1,0	185	30	1221

SIZE	PR/LI	Tread pattern	Main range of use	Rim size	Permitted rims	OD mm +/-1,5%	SW mm +/-2%	Max. air pressure bar	Max. load kg	Speed (km/h)	RC mm +/-2,5%
16.5x6.50-8	64J	**T539 HS**	High Speed	5.375-8	5.50A-8	411	165	3,1	280	100	1224

PRESSURE								
psi	**7**	**12**	**15**	**22**	**30**	**36**	**44**	**45**
bar	**0,5**	**0,8**	**1**	**1,5**	**2,1**	**2,5**	**3**	**3,1**
MAX. LOAD kg								
10	170	225	260	335	405	440	495	**505**
20	145	190	220	280	340	370	415	420
30	120	155	180	230	280	305	345	350
40	110	145	165	215	260	280	315	320
60	105	140	160	205	250	270	305	310
80	100	130	150	190	235	255	285	290
100	95	125	145	185	225	245	275	280

SIZE	PR/LI	Tread pattern	Main range of use	Rim size	Permitted rims	OD mm +/-1,5%	SW mm +/-2%	Max. air pressure bar	Max. load kg	Speed (km/h)	RC mm +/-2,5%
16x6.50-8	84	**T310**	Farming	5.375I	5.50A	406	172	5,1	500	40,5	1221

PRESSURE															
psi	**12**	**17**	**22**	**29**	**35**	**40**	**43**	**49**	**51**	**54**	**57**	**63**	**66**	**69**	**74**
bar	**0,8**	**1,2**	**1,6**	**2,0**	**2,4**	**2,8**	**3,0**	**3,4**	**3,6**	**3,8**	**4,0**	**4,4**	**4,6**	**4,8**	**5,1**
MAX. LOAD kg															
50	155	195	230	260	290	315	330	355	370	380	390	415	425	435	450
40	170	215	255	290	320	350	365	395	410	420	435	460	470	485	**500**
30	190	240	285	325	360	390	410	440	460	470	485	515	525	545	560
25	200	255	305	345	380	415	435	470	490	500	520	545	560	575	595
20	215	270	320	365	405	440	460	500	515	530	550	580	590	610	630
10	240	300	355	405	450	490	510	555	575	590	610	645	660	680	700

SIZE	PR/LI	Tread pattern	Main range of use	Rim size	Permitted rims	OD mm +/-1,5%	SW mm +/-2%	Max. air pressure bar	Max. load kg	Speed (km/h)	RC mm +/-2,5%
16.5x6.50-8	72J	**T539 HS TL**	High Speed	5.375I	5.50A	408	172	4,8	365	100	1212
16x7.50-8	4	**T537 TL**	Green Area	5.375	5.50A	430	180	2,1	335	30	1265

SIZE	PR/LI	Tread pattern	Main range of use	Rim size	Permitted rims	OD mm +/-1,5%	SW mm +/-2%	Max. air pressure bar	Max. load kg	Speed (km/h)	RC mm +/-2,5%
16x7.50-8	4/70A6	**T539 TL**	Green Area	5.375I	5.00A	420	179	1,8	335	30	1240

PRESSURE							
psi	**7**	**12**	**14**	**17**	**20**	**23**	**26**
bar	**0,5**	**0,8**	**1**	**1,2**	**1,4**	**1,6**	**1,8**
MAX. LOAD kg							
40	145	190	215	240	260	285	**300**
30	160	210	240	265	290	315	335
25	170	225	255	285	310	335	360
20	180	240	275	300	330	360	380
15	195	255	290	320	350	380	405
10	205	270	310	340	375	405	430

SIZE	PR/LI	Tread pattern	Main range of use	Rim size	Permitted rims	OD mm +/-1,5%	SW mm +/-2%	Max. air pressure bar	Max. load kg	Speed (km/h)	RC mm +/-2,5%
18x7.50-8	2	**T539 TL**	Green Area/Farming	5.50	6.00	464	184	0,9	243	30	1372
18x8.50-8	2/58A6	**GARDENER TL**	Green Area	7.00		455	214	0,7	236	30	1350

SIZE	PR/LI	Tread pattern	Main range of use	Rim size	Permitted rims	OD mm +/-1,5%	SW mm +/-2%	Max. air pressure bar	Max. load kg	Speed (km/h)	RC mm +/-2,5%
18x8.50-8	4	**T539 TL**	Green Area/Farming	7.00I	6.50	472	222	1,5	375	30	1402

PRESSURE					
psi	**12**	**14**	**17**	**20**	**22**
bar	**0,8**	**1,0**	**1,2**	**1,4**	**1,5**
MAX. LOAD kg					
40	235	265	295	325	340
35	245	280	315	340	355
30	260	295	330	360	**375**
25	280	315	355	385	400
20	295	335	375	410	430
15	315	355	400	435	455
10	335	380	425	465	485

SIZE	PR/LI	Tread pattern	Main range of use	Rim size	Permitted rims	OD mm +/-1,5%	SW mm +/-2%	Max. air pressure bar	Max. load kg	Speed (km/h)	RC mm +/-2,5%
18x8.50-8	6	**T539**	Farming	7.00I	6.50	466	222	2,8	475	30	1384
	6	**T510**	Farming	7.00I	6.50	463	225	2,8	475	30	1384

SIZE	PR/LI	Tread pattern	Main range of use	Rim size	Permitted rims	OD mm +/-1,5%	SW mm +/-2%	Max. air pressure bar	Max. load kg	Speed (km/h)	RC mm +/-2,5%
18x8.50-8	8PR	**T415**	Industrial	7.00I-8	6.50-8	450	213	3,2	580	30	1347

PRESSURE														
psi	**12**	**15**	**17**	**20**	**23**	**26**	**29**	**32**	**35**	**37**	**40**	**43**	**46**
bar	**0,8**	**1**	**1,2**	**1,4**	**1,6**	**1,8**	**2**	**2,2**	**2,4**	**2,6**	**2,8**	**3**	**3,2**
MAX. LOAD kg														
50	210	235	260	290	310	330	350	370	390	410	430	450	465
45	215	245	270	300	320	345	365	385	405	425	445	465	480
40	225	255	280	310	330	355	375	400	420	440	460	480	495
35	230	260	290	320	340	370	390	410	435	455	475	495	515
30	240	270	295	330	350	380	400	425	450	470	490	510	530
25	245	280	305	340	365	390	415	440	460	485	505	530	545
20	255	285	315	350	375	405	425	450	475	500	520	545	565
15	260	295	325	360	385	415	440	465	490	515	535	560	**580**

SIZE	PR/LI	Tread pattern	Main range of use	Rim size	Permitted rims	OD mm +/-1,5%	SW mm +/-2%	Max. air pressure bar	Max. load kg	Speed (km/h)	RC mm +/-2,5%
18x8.50-8	8	**T570 TL**	Skid Steer	7.00I		450	213	3,2	580	15	

PRESSURE										
psi	**12**	**17**	**23**	**29**	**32**	**35**	**38**	**41**	**43**	**46**
bar	**0,8**	**1,2**	**1,6**	**2,0**	**2,2**	**2,4**	**2,6**	**2,8**	**3,0**	**3,2**
MAX. LOAD kg										
40	220	275	325	375	395	415	440	455	475	495
30	235	295	345	395	420	440	465	480	505	520
25	245	310	365	420	440	465	490	510	530	550
20	255	320	375	430	455	480	505	525	550	570
15	260	325	385	440	465	490	515	535	560	**580**
10	310	385	460	525	555	585	615	635	665	690

SIZE	PR/LI	Tread pattern	Main range of use	Rim size	Permitted rims	OD mm +/-1,5%	SW mm +/-2%	Max. air pressure bar	Max. load kg	Speed (km/h)	RC mm +/-2,5%
18x9.50-8	4	**T521 GT TL**	Green Area	7.00I		455	240	1,7	470	25	1348

PRESSURE							
psi	**7**	**12**	**14**	**17**	**20**	**23**	**25**
bar	**0,5**	**0,8**	**1,0**	**1,2**	**1,4**	**1,6**	**1,7**
MAX. LOAD kg							
40	200	265	305	340	370	400	415
30	220	285	330	365	400	430	445
25	230	300	345	385	420	455	**470**
20	245	320	370	410	450	485	505
15	260	340	395	440	480	520	535
10	280	365	415	465	510	550	570
0	365	475	545	610	665	720	745

SIZE	PR/LI	Tread pattern	Main range of use	Rim size	Permitted rims	OD mm +/-1,5%	SW mm +/-2%	Max. air pressure bar	Max. load kg	Speed (km/h)	RC mm +/-2,5%
18x9.50-8	4/82A6	**DRIVER TL**	Professional	7.00		465	235	1,7	475	30	1347
20x8.00-8	4	**T539 TL**	Green Area	6.00		515	215	1,5	420	30	1517
20x10.00-8	2	**Gardener**	Green Area	7.00		500	255	0,7	345	30	1463

SIZE	PR/LI	Tread pattern	Main range of use	Rim size	Permitted rims	OD mm +/-1,5%	SW mm +/-2%	Max. air pressure bar	Max. load kg	Speed (km/h)	RC mm +/-2,5%
20x10.00-8	6	**T539**	Farming	8.50	8.00	529	264	2,4	670	30	1556
PRESSURE											
psi			**7**	**12**	**14**	**17**	**20**	**23**	**26**	**29**	**32**
bar			**0,5**	**0,8**	**1**	**1,2**	**1,4**	**1,6**	**1,8**	**2**	**2,2**
MAX. LOAD kg											
40			250	335	380	425	465	500	535	570	605
30			280	370	420	470	515	555	595	635	**670**
20			320	420	480	535	585	635	680	725	765
15			340	450	510	570	625	670	720	770	810
10			360	475	540	605	665	715	770	820	865

SIZE	PR/LI	Tread pattern	Main range of use	Rim size	Permitted rims	OD mm +/-1,5%	SW mm +/-2%	Max. air pressure bar	Max. load kg	Speed (km/h)	RC mm +/-2,5%
170/60-8	47A8/35A8	**HIGH GRIP TL**	Green Area	5.375		407	171	1,2	175	40	1195
PRESSURE											
psi			**7**		**12**		**14**		**17**		**20**
bar			**0,5**		**0,8**		**1,0**		**1,2**		**1,4**
MAX. LOAD kg											
50 FR			95		120		140		160		
40 FR			105		135		155		**175**		
10 FR			140		175		200		225		245
50 DrW			70		90		100		110		
40 DrW			75		95		110		**120**		
10 DrW			100		125		140		155		170

SIZE	PR/LI	Tread pattern	Main range of use	Rim size	Permitted rims	OD mm +/-1,5%	SW mm +/-2%	Max. air pressure bar	Max. load kg	Speed (km/h)	RC mm +/-2,5%
190-8	8	**T537**	Industrial	5.50	6.00	424	175	5,9	575	25	1265

SIZE	PR/LI	Tread pattern	Main range of use	Rim size	Permitted rims	OD mm +/-1,5%	SW mm +/-2%	Max. air pressure bar	Max. load kg	Speed (km/h)	RC mm +/-2,5%
200/65-8	59A8/47A8	**HIGH GRIP TL**	Green Area	5.375	6.50	455	205	1,2	243	40	1360

PRESSURE						
psi	**7**	**12**	**14**	**17**	**20**	
bar	**0,5**	**0,8**	**1,0**	**1,2**	**1,4**	
MAX. LOAD kg						
50 FR	135	170	195	220		
40 FR	150	190	215	**243**		
10 FR	195	245	280	310	345	
50 DrW	95	120	140	160		
40 DrW	105	130	155	**175**		
10 DrW	135	170	195	220	250	

SIZE	PR/LI	Tread pattern	Main range of use	Rim size	Permitted rims	OD mm +/-1,5%	SW mm +/-2%	Max. air pressure bar	Max. load kg	Speed (km/h)	RC mm +/-2,5%
220/45-8	70A8/58A8	**T510**	Farming	7.00I-8		410	220	2,4	335	40	1195

PRESSURE													
psi	**7**	**12**	**14**	**17**	**20**	**23**	**26**	**28**	**31**	**34**	**37**	**40**
bar	**0,5**	**0,8**	**1,0**	**1,2**	**1,4**	**1,6**	**1,8**	**2**	**2,2**	**2,4**	**2,6**	**2,8**
MAX. LOAD kg												
50 FR	115	145	165	185	205	225	245	260	280	300		
40 FR	125	160	185	205	230	250	270	290	315	**335**		
10 FR	165	210	235	265	290	320	345	370	395	420	445	475
50 DrW	80	100	115	130	145	160	175	185	200	215		
40 DrW	90	110	130	145	160	180	195	205	220	**235**		
10 DrW	115	145	165	185	205	225	250	265	280	300	315	335

SIZE	PR/LI	Tread pattern	Main range of use	Rim size	Permitted rims	OD mm +/-1,5%	SW mm +/-2%	Max. air pressure bar	Max. load kg	Speed (km/h)	RC mm +/-2,5%
220/45-8	70A8/58A8	**T310**	Farming	7.00I-8		410	220	2,4	335	40	1195

PRESSURE													
psi	**7**	**12**	**14**	**17**	**20**	**23**	**26**	**28**	**31**	**34**	**37**	**40**
bar	**0,5**	**0,8**	**1,0**	**1,2**	**1,4**	**1,6**	**1,8**	**2**	**2,2**	**2,4**	**2,6**	**2,8**
MAX. LOAD kg												
50 FR	115	145	165	185	205	225	245	260	280	300		
40 FR	125	160	185	205	230	250	270	290	315	**335**		
10 FR	165	210	235	265	290	320	345	370	395	420	445	475
50 DrW	80	100	115	130	145	160	175	185	200	215		
40 DrW	90	110	130	145	160	180	195	205	220	**235**		
10 DrW	115	145	165	185	205	225	250	265	280	300	315	335

SIZE	PR/LI	Tread pattern	Main range of use	Rim size	Permitted rims	OD mm +/-1,5%	SW mm +/-2%	Max. air pressure bar	Max. load kg	Speed (km/h)	RC mm +/-2,5%
220/60-8	74A8/62A8	**T463 PLUS**	Farming	7.00I-8	8.00-8	476	220	2,0	375	40	1392

PRESSURE											
psi	**7**	**12**	**14**	**17**	**20**	**23**	**26**	**28**	**31**	**34**
bar	**0,5**	**0,8**	**1,0**	**1,2**	**1,4**	**1,6**	**1,8**	**2,0**	**2,2**	**2,4**
MAX. LOAD kg										
50 FR	145	185	210	240	265	295	315	340		
40 FR	160	205	235	265	295	325	350	**375**		
10 FR	215	265	305	340	375	410	445	480	510	525
50 DrW	105	130	150	170	190	205	225	240		
40 DrW	115	145	165	190	210	230	250	**265**		
10 DrW	150	190	215	240	270	295	315	340	360	370

SIZE	PR/LI	Tread pattern	Main range of use	Rim size	Permitted rims	OD mm +/-1,5%	SW mm +/-2%	Max. air pressure bar	Max. load kg	Speed (km/h)	RC mm +/-2,5%
210/60-8	83A8	**T415 TL**	Industrial	7.00	6.50	455	212	3,2	487	40	1347

PRESSURE							
psi	**12**	**17**	**23**	**29**	**35**	**41**	**46**
bar	**0,8**	**1,2**	**1,6**	**2,0**	**2,4**	**2,8**	**3,2**
MAX. LOAD kg							
50 FR	170	220	270	310	360	410	440
40 FR	190	245	300	345	400	455	**487**
30 FR	215	275	335	390	450	510	545
10 FR	265	345	420	485	560	635	680
50 DrW	120	155	195	220	255	290	310
40 DrW	135	175	215	245	285	320	**345**
30 DrW	150	195	240	275	315	360	385
10 DrW	190	240	300	345	395	450	485

SIZE	PR/LI	Tread pattern	Main range of use	Rim size	Permitted rims	OD mm +/-1,5%	SW mm +/-2%	Max. air pressure bar	Max. load kg	Speed (km/h)	RC mm +/-2,5%
220/60-8	83	**T510**	Farming	7.00I		464	222	2,8	487	40	1382

PRESSURE														
psi	**7**	**12**	**14**	**17**	**20**	**23**	**26**	**29**	**32**	**35**	**38**	**41**	**43**	**46**
bar	**0,5**	**0,8**	**1,0**	**1.2**	**1,4**	**1,6**	**1,8**	**2,0**	**2,2**	**2,4**	**2,6**	**2,8**	**3,0**	**3,2**
MAX. LOAD kg														
50 FR	145	185	210	240	265	295	315	340	365	395	415	440		
40 FR	160	205	235	265	295	325	350	375	405	435	460	**487**		
10 FR	215	265	305	340	375	410	445	480	510	545	580	620	650	680
50 DrW	105	130	150	170	190	205	225	240	255	275	295	310		
40 DrW	115	145	165	190	210	230	250	265	285	305	325	**345**		
10 DrW	150	190	215	240	270	295	315	340	360	385	410	435	460	480

TIRES 9”

SIZE	PR/LI	Tread pattern	Main range of use	Rim size	Permitted rims	OD mm +/-1,5%	SW mm +/-2%	Max. air pressure bar	Max. load kg	Speed (km/h)	RC mm +/-2,5%
6.00-9	6	**T522**	Farming	4.50	4.00E	560	174	3,0	500	30	1665

PRESSURE													
psi	**7**	**12**	**14**	**17**	**20**	**23**	**26**	**29**	**32**	**35**	**38**	**41**	**43**
bar	**0,5**	**0,8**	**1,0**	**1,2**	**1,4**	**1,6**	**1,8**	**2,0**	**2,2**	**2,4**	**2,6**	**2,8**	**3,0**
MAX. LOAD kg													
40 FR	160	205	240	265	290	310	335	355	375	395	415	430	450
30 FR	175	230	265	295	320	345	370	395	415	440	460	480	**500**
10 FR	225	295	340	380	415	445	475	510	535	570	595	620	645
40 DrW	115	145	165	185	205	215	235	250	260	275	290	300	315
30 DrW	125	160	185	205	225	240	260	275	290	305	320	335	**350**
10 DrW	160	205	240	265	290	310	335	355	375	395	415	430	450

SIZE	PR/LI	Tread pattern	Main range of use	Rim size	Permitted rims	OD mm +/-1,5%	SW mm +/-2%	Max. air pressure bar	Max. load kg	Speed (km/h)	RC mm +/-2,5%
6.00-9	10	**T522**	Farming	4.00E-9	4.50-9	564	164	5,0	670	30	1675

PRESSURE																
psi	**7**	**14**	**22**	**29**	**36**	**43**	**46**	**49**	**52**	**55**	**58**	**62**	**64**	**67**	**70**	**72**
bar	**0,5**	**1,0**	**1,5**	**2,0**	**2,5**	**3,0**	**3,2**	**3,4**	**3,6**	**3,8**	**4,0**	**4,2**	**4,4**	**4,6**	**4,8**	**5,0**
MAX. LOAD kg																
40 FR	160	240	295	355	400	450	465	480	500	515	530	545	560	575	590	605
30 FR	175	265	330	395	445	500	515	535	555	570	590	605	620	640	655	**670**
10 FR	225	340	425	510	575	645	665	690	715	735	760	780	800	825	845	865
40 DrW	115	165	205	250	285	315	325	340	345	360	370	385	390	400	415	425
30 DrW	125	185	230	275	315	350	360	375	385	400	410	425	435	445	460	**475**
10 DrW	160	240	295	355	405	450	465	485	495	515	530	550	560	575	595	605

SIZE	PR/LI	Tread pattern	Main range of use	Rim size	Permitted rims	OD mm +/-1,5%	SW mm +/-2%	Max. air pressure bar	Max. load kg	Speed (km/h)	RC mm +/-2,5%
6.00-9	10	**T991**	Farming	4.00E	4.50	542	182	5,0	670	30	1610
	99J	**T523 HS**	High Speed	4.00E	4.50	562	170	8,5	775	100	1669

TIRES 10”

SIZE	PR/LI	Tread pattern	Main range of use	Rim size	Permitted rims	OD mm +/-1,5%	SW mm +/-2%	Max. air pressure bar	Max. load kg	Speed (km/h)	RC mm +/-2,5%
4.40-10	62J	**T690 HS**	High Speed	3.50-10	-	476	118	3,5	265	100	1414

SIZE	PR/LI	Tread pattern	Main range of use	Rim size	Permitted rims	OD mm +/-1,5%	SW mm +/-2%	Max. air pressure bar	Max. load kg	Speed (km/h)	RC mm +/-2,5%
5.0-10	8	**T462 TL**	Farming	4.00	3.50	537	144	5,2	670	30	1571

PRESSURE																				
psi	**12**	**14**	**19**	**23**	**29**	**33**	**38**	**43**	**48**	**52**	**58**	**62**	**67**	**72**	**75**	**81**	**87**	**93**	**99**
bar	**0,8**	**1,0**	**1,3**	**1,6**	**2,0**	**2,3**	**2,6**	**3,0**	**3,3**	**3,6**	**4,0**	**4,3**	**4,6**	**5,0**	**5,2**	**5,6**	**6,0**	**6,4**	**6,8**
MAX. LOAD kg																			
40 FR	205	230	270	300	345	375	400	435	465	485	520	540	565	590	605				
30 FR	225	255	300	335	385	415	445	485	515	540	575	600	625	655	**670**				
10 FR	290	330	385	430	495	535	575	625	665	695	740	775	805	845	865				
40 DrW	140	160	190	210	245	260	285	305	325	340	360	380	390	415	425				
30 DrW	155	180	210	235	270	290	315	340	360	380	400	420	435	460	**470**				
10 DrW	200	230	270	305	350	375	405	440	465	490	515	540	560	595	605				
10C	245	285	330	370	425	455	495	535	570	600	630	660	685	725	740	775	805	835	865

SIZE	PR/LI	Tread pattern	Main range of use	Rim size	Permitted rims	OD mm +/-1,5%	SW mm +/-2%	Max. air pressure bar	Max. load kg	Speed (km/h)	RC mm +/-2,5%
7.50-10	12	**T991**	Farming	5.50F-10	6.00F-10	670	224	5,0	1075	30	1990

PRESSURE															
psi	**14**	**22**	**29**	**36**	**43**	**46**	**49**	**52**	**55**	**58**	**62**	**64**	**67**	**70**	**72**
bar	**1,0**	**1,5**	**2,0**	**2,5**	**3,0**	**3,2**	**3,4**	**3,6**	**3,8**	**4,0**	**4,2**	**4,4**	**4,6**	**4,8**	**5,0**
MAX. LOAD kg															
40 FR	380	475	565	645	715	745	775	795	825	850	875	900	925	945	970
30 FR	420	530	630	715	795	830	860	885	915	945	970	1000	1025	1050	**1075**
10 FR	540	685	815	920	1025	1070	1110	1140	1180	1220	1250	1290	1320	1355	1385
40 DrW	265	335	395	450	505	520	540	560	575	595	610	630	645	660	680
30 DrW	295	370	440	500	560	580	600	620	640	660	680	700	715	735	**755**
10 DrW	380	475	570	645	720	750	775	800	825	850	875	905	920	950	975

SIZE	PR/LI	Tread pattern	Main range of use	Rim size	Permitted rims	OD mm +/-1,5%	SW mm +/-2%	Max. air pressure bar	Max. load kg	Speed (km/h)	RC mm +/-2,5%
7.50-10	14	**T523 TL**	Industrial	5.50F		668	225	9,0	2180	25	1984

SIZE	PR/LI	Tread pattern	Main range of use	Rim size	Permitted rims	OD mm +/-1,5%	SW mm +/-2%	Max. air pressure bar	Max. load kg	Speed (km/h)	RC mm +/-2,5%
18x8.50-10	8	**T570 TL**	Skid Steer	7.00I		468	204	3,2	545	15	1391

PRESSURE											
psi	**12**	**17**	**23**	**29**	**32**	**35**	**38**	**41**	**43**	**46**
bar	**0,8**	**1,2**	**1,6**	**2,0**	**2,2**	**2,4**	**2,6**	**2,8**	**3,0**	**3,2**
MAX. LOAD kg										
40	205	260	310	355	375	390	410	430	445	465
30	215	275	330	375	395	415	435	455	475	490
25	230	290	345	395	420	435	460	480	500	520
20	235	300	360	405	430	450	475	495	515	535
15	240	305	365	415	440	460	485	505	525	**545**
10	285	365	435	495	525	545	575	600	625	650

SIZE	PR/LI	Tread pattern	Main range of use	Rim size	Permitted rims	OD mm +/-1,5%	SW mm +/-2%	Max. air pressure bar	Max. load kg	Speed (km/h)	RC mm +/-2,5%
20x8.00-10	4	**T539 GT TL**	Green Area	6.00I	7.00	512	204	1,7	412	30	1521

LUFTDRUCK						
psi	**12**	**14**	**17**	**20**	**23**	**25**
bar	**0,8**	**1,0**	**1,2**	**1,4**	**1,6**	**1,7**
Max. Tragfähigkeit (kg)						
40	210	240	270	295	320	330
35	240	270	300	335	360	370
30	265	300	335	370	400	**412**
25	285	320	360	395	430	440
20	320	360	400	445	480	490
15	345	390	435	480	520	535
10	370	420	470	520	560	575

SIZE	PR/LI	Tread pattern	Main range of use	Rim size	Permitted rims	OD mm +/-1,5%	SW mm +/-2%	Max. air pressure bar	Max. load kg	Speed (km/h)	RC mm +/-2,5%
20x8.00-10	6	**T539 TL**	Farming	6.00I		505	204	2,9	585	30	1500

PRESSURE																		
psi	**12**	**14**	**17**	**20**	**23**	**26**	**29**	**32**	**35**	**38**	**41**	**42**	**43**	**46**	**49**	**52**	**55**
bar	**0,8**	**1,0**	**1,2**	**1,4**	**1,6**	**1,8**	**2,0**	**2,2**	**2,4**	**2,6**	**2,8**	**2,9**	**3,0**	**3,2**	**3,4**	**3,6**	**3,8**
MAX. LOAD kg																	
40 FR	250	285	315	340	375	400	425	450	475	495	520	525					
30 FR	275	315	350	380	415	445	470	500	525	550	575	**585**					
10 FR	355	405	450	490	535	575	605	645	675	710	740	755					
40 DrW	175	200	220	245	260	280	295	315	330	345	360	370					
30 DrW	195	220	245	270	290	310	330	350	365	385	400	**410**					
10 DrW	250	285	315	350	375	400	425	450	470	495	515	530					
10C	310	345	385	425	455	490	520	550	575	605	630	645	660	685	710	735	755

SIZE	PR/LI	Tread pattern	Main range of use	Rim size	Permitted rims	OD mm +/-1,5%	SW mm +/-2%	Max. air pressure bar	Max. load kg	Speed (km/h)	RC mm +/-2,5%
20x8.00-10	8	**T570 TL**	Skid Steer	6.00I		505	208	2,8	615	15	1532
20.5x8.00-10	10	**T539 TL**	Farming	7.00		525	208	4,0	825	30	1573
20x10.00-10	6	**T539 TL**	Farming	7.00	8.50	512	242	2,4	650	30	1533

SIZE	PR/LI	Tread pattern	Main range of use	Rim size	Permitted rims	OD mm +/-1,5%	SW mm +/-2%	Max. air pressure bar	Max. load kg	Speed (km/h)	RC mm +/-2,5%
110/100-10	84A8/72A8	**T560 ICE TL**	Ropeway	3.00B		474	110	5,0	500	40	1420

PRESSURE																				
psi	**12**	**17**	**23**	**26**	**29**	**32**	**35**	**38**	**41**	**43**	**46**	**49**	**52**	**55**	**58**	**62**	**67**	**72**	**75**	**84**
bar	**0,8**	**1,2**	**1,6**	**1,8**	**2,0**	**2,2**	**2,4**	**2,6**	**2,8**	**3,0**	**3,2**	**3,4**	**3,6**	**3,8**	**4,0**	**4,3**	**4,6**	**5,0**	**5,2**	**5,8**
MAX. LOAD kg																				
50 FR	135	175	210	230	245	265	285	305	330	340	350	365	385	400	415	430	440	450		
40 FR	150	195	235	255	270	295	315	340	365	375	385	405	425	445	460	475	490	**500**		
10 FR	195	250	300	325	350	370	395	420	445	475	510	520	540	555	580	615	645	665	680	705
50 DrW	95	120	155	165	175	190	200	215	230	240	245	255	270	280	295	300	310	320		
40 DrW	105	135	170	185	195	210	225	240	255	265	270	285	300	315	325	335	345	**355**		
10 DrW	140	175	215	235	250	265	280	300	315	335	360	365	380	390	410	435	455	470	480	500

SIZE	PR/LI	Tread pattern	Main range of use	Rim size	Permitted rims	OD mm +/-1,5%	SW mm +/-2%	Max. air pressure bar	Max. load kg	Speed (km/h)	RC mm +/-2,5%
200/55-10	95	**T430 TL**	Farming	6.00	5.50/7.00	487	190	4,0	690	40	1448

PRESSURE									
psi	**12**	**17**	**23**	**29**	**35**	**41**	**46**	**52**	**58**
bar	**0,8**	**1,2**	**1,6**	**2,0**	**2,4**	**2,8**	**3,2**	**3,6**	**4,0**
MAX. LOAD kg									
50 FR	200	260	320	370	430	475	520	565	620
40 FR	225	290	355	410	475	530	580	630	**690**
30 FR	250	325	400	460	530	595	650	705	775
10 FR	290	370	450	525	595	675	740	800	860
50 DrW	145	185	225	260	300	340	370	405	440
40 DrW	160	205	250	290	335	375	410	450	**485**
30 DrW	180	230	280	325	375	420	460	505	545
10 DrW	210	265	320	370	420	475	525	570	615

SIZE	PR/LI	Tread pattern	Main range of use	Rim size	Permitted rims	OD mm +/-1,5%	SW mm +/-2%	Max. air pressure bar	Max. load kg	Speed (km/h)	RC mm +/-2,5%
250/50-10	79A8/67A8	**HIGH GRIP TL**	Green Area	8.50		504	251	1,2	437	40	1515

TIRES 12”

SIZE	PR/LI	Tread pattern	Main range of use	Rim size	Permitted rims	OD mm +/-1,5%	SW mm +/-2%	Max. air pressure bar	Max. load kg	Speed (km/h)	RC mm +/-2,5%
6-12	4	**T63 TL**	Farming	4.00E	5.00	582	146	2,75	230	30	1729
10.0/75-12	10	**T446 TL**	Farming	9.00	7.00	690	255	3,9	1325	30	2049

SIZE	PR/LI	Tread pattern	Main range of use	Rim size	Permitted rims	OD mm +/-1,5%	SW mm +/-2%	Max. air pressure bar	Max. load kg	Speed (km/h)	RC mm +/-2,5%
23x8.50-12	4	**T463 TL**	Farming	7.00	7JA	570	213	1,8	500	30	1699

PRESSURE			
psi	**12**	**17**	**26**
bar	**0,8**	**1,2**	**1,8**
MAX. LOAD kg			
40	288	369	450
35	304	390	475
30	320	410	**500**
25	342	439	535
20	365	467	570
15	387	496	605
10	413	529	645
0	528	677	825

SIZE	PR/LI	Tread pattern	Main range of use	Rim size	Permitted rims	OD mm +/-1,5%	SW mm +/-2%	Max. air pressure bar	Max. load kg	Speed (km/h)	RC mm +/-2,5%
23x8.50-12	104	**T463 TL**	Farming	7.00	7JA-12	572	-	4,0	900	40	1718

PRESSURE																
psi	**14**	**17**	**20**	**23**	**26**	**29**	**32**	**35**	**38**	**41**	**43**	**46**	**49**	**52**	**55**	**58**
bar	**1,0**	**1,2**	**1,4**	**1,6**	**1,8**	**2,0**	**2,2**	**2,4**	**2,6**	**2,8**	**3,0**	**3,2**	**3,4**	**3,6**	**3,8**	**4,0**
MAX. LOAD kg																
40	400	445	485	525	565	600	635	670	700	730	760	790	820	845	875	**900**
30	450	500	545	590	635	670	710	750	785	820	850	885	920	945	980	1010
20	505	560	610	660	710	755	800	845	880	920	960	995	1035	1065	1105	1135
15	530	590	645	700	750	800	845	890	930	970	1010	1050	1090	1125	1165	1195
10	560	625	680	735	790	840	890	940	980	1020	1065	1105	1150	1185	1225	1260

SIZE	PR/LI	Tread pattern	Main range of use	Rim size	Permitted rims	OD mm +/-1,5%	SW mm +/-2%	Max. air pressure bar	Max. load kg	Speed (km/h)	RC mm +/-2,5%
23x8.50-12	6	**T550 TL**	Skid Steer	7.00I	7JA	589	211	3,4	820	10	1752

PRESSURE														
psi	**12**	**14**	**17**	**20**	**23**	**26**	**29**	**32**	**35**	**38**	**41**	**43**	**46**	**49**
bar	**0,5**	**1,0**	**1,2**	**1,4**	**1,6**	**1,8**	**2,0**	**2,2**	**2,4**	**2,6**	**2,8**	**3,0**	**3,2**	**3,4**
MAX. LOAD kg														
50	220	250	280	310	335	355	380	400	420	440	460	480	500	515
40	230	265	295	325	350	375	395	420	440	460	480	500	520	540
30	240	270	305	335	360	385	410	430	455	475	495	515	535	560
20	265	305	340	370	405	430	455	485	510	530	555	580	600	625
15	275	315	350	385	420	445	475	500	530	555	575	600	625	650
10	350	400	445	490	530	565	600	635	670	700	730	760	790	**820**
0	555	630	705	775	835	895	950	1005	1060	1105	1155	1200	1250	1295

SIZE	PR/LI	Tread pattern	Main range of use	Rim size	Permitted rims	OD mm +/-1,5%	SW mm +/-2%	Max. air pressure bar	Max. load kg	Speed (km/h)	RC mm +/-2,5%
23x8.50-12	10	**T539**	Farming	7.00I	7JA	568	212	4,0	900	30	1687

PRESSURE																
psi	**14**	**17**	**20**	**23**	**26**	**29**	**32**	**35**	**38**	**41**	**43**	**46**	**49**	**52**	**55**	**58**
bar	**1,0**	**1,2**	**1,4**	**1,6**	**1,8**	**2,0**	**2,2**	**2,4**	**2,6**	**2,8**	**3,0**	**3,2**	**3,4**	**3,6**	**3,8**	**4,0**
MAX. LOAD kg																
40	360	400	435	475	510	540	570	605	630	655	685	710	740	760	790	810
30	400	445	485	525	565	600	635	670	700	730	760	790	820	845	875	**900**
20	455	505	555	600	645	685	725	765	800	830	865	900	935	965	1000	1025
15	485	540	585	635	685	725	770	810	845	885	920	955	990	1020	1060	1090
10	515	575	625	675	730	775	820	865	905	940	980	1020	1060	1090	1130	1160

SIZE	PR/LI	Tread pattern	Main range of use	Rim size	Permitted rims	OD mm +/-1,5%	SW mm +/-2%	Max. air pressure bar	Max. load kg	Speed (km/h)	RC mm +/-2,5%
23x8.50-12	10	**T539 Grey**	Scissor lift	7.00		580	220	4,0	900	30	1758

PRESSURE																	
psi	**14**	**17**	**20**	**23**	**26**	**29**	**32**	**35**	**38**	**41**	**43**	**46**	**49**	**52**	**55**	**58**
bar	**1,0**	**1,2**	**1,4**	**1,6**	**1,8**	**2,0**	**2,2**	**2,4**	**2,6**	**2,8**	**3,0**	**3,2**	**3,4**	**3,6**	**3,8**	**4,0**
MAX. LOAD kg																
40	360	400	435	475	510	540	570	605	630	655	685	710	740	760	790	810
30	400	445	485	525	565	600	635	670	700	730	760	790	820	845	875	**900**
20	455	505	555	600	645	685	725	765	800	830	865	900	935	965	1000	1025
15	485	540	585	635	685	725	770	810	845	885	920	955	990	1020	1060	1090
10	515	575	625	675	730	775	820	865	905	940	980	1020	1060	1090	1130	1160

SIZE	PR/LI	Tread pattern	Main range of use	Rim size	Permitted rims	OD mm +/-1,5%	SW mm +/-2%	Max. air pressure bar	Max. load kg	Speed (km/h)	RC mm +/-2,5%
23x10.50-12	4	**T463 TL**	Farming	8.5	7JA	572	275	1,4	600	30	1705

SIZE	PR/LI	Tread pattern	Main range of use	Rim size	Permitted rims	OD mm +/-1,5%	SW mm +/-2%	Max. air pressure bar	Max. load kg	Speed (km/h)	RC mm +/-2,5%
23x10.50-12	10	**T463 TL**	Farming	7.00I	8.50I	574	272	3,6	1000	30	1705

PRESSURE																			
psi	**14**	**17**	**20**	**23**	**26**	**29**	**32**	**35**	**38**	**41**	**43**	**46**	**49**	**52**	**55**	**58**	**61**	**64**	**68**
bar	**1,0**	**1,2**	**1,4**	**1,6**	**1,8**	**2,0**	**2,2**	**2,4**	**2,6**	**2,8**	**3,0**	**3,2**	**3,4**	**3,6**	**3,8**	**4,0**	**4,2**	**4,4**	**4,7**
MAX. LOAD kg																			
40 FR	430	475	520	560	600	640	675	710	745	780	810	840	870	900					
30 FR	475	525	575	620	665	710	750	790	825	865	900	935	965	**1000**					
10 FR	510	675	740	800	860	915	970	1020	1065	1115	1160	1205	1245	1290					
40 DrW	295	335	365	390	420	445	475	495	520	545	565	590	610	630					
30 DrW	330	370	405	435	465	495	525	550	580	605	630	655	675	**700**					
10 DrW	425	475	520	560	600	640	675	710	750	780	815	845	870	905					
10C	520	585	640	685	735	780	830	865	915	955	995	1035	1065	1105	1135	1175	1205	1240	1295

SIZE	PR/LI	Tread pattern	Main range of use	Rim size	Permitted rims	OD mm +/-1,5%	SW mm +/-2%	Max. air pressure bar	Max. load kg	Speed (km/h)	RC mm +/-2,5%
23x10.50-12	4	**T539 TL**	Green Area/Farming	7.00I	8.50I	580	269	1,4	550	30	1723

PRESSURE						
psi	**12**	**14**	**17**	**20**	**23**	**26**
bar	**0,8**	**1,0**	**1,2**	**1,4**	**1,6**	**1,8**
MAX. LOAD kg						
40 FR	355	405	455	495		
30 FR	395	450	505	**550**		
10 FR	510	580	650	710		
40 DrW	250	285	315	345		
30 DrW	280	315	350	**385**		
10 DrW	360	405	450	495		
10C	440	495	550	605	655	700

SIZE	PR/LI	Tread pattern	Main range of use	Rim size	Permitted rims	OD mm +/-1,5%	SW mm +/-2%	Max. air pressure bar	Max. load kg	Speed (km/h)	RC mm +/-2,5%
23x10.50-12	6	**T539 TL**	Farming	7.00	8.50	571	247	2,2	800	30	1699

PRESSURE									
psi	**7**	**12**	**14**	**17**	**20**	**23**	**26**	**29**	**32**
bar	**0,5**	**0,8**	**1,0**	**1,2**	**1,4**	**1,6**	**1,8**	**2,0**	**2,2**
MAX. LOAD kg									
40	300	400	455	505	555	600	640	680	720
30	335	445	505	560	615	665	710	755	**800**
20	380	505	575	640	700	760	810	860	910
15	405	540	610	680	745	805	860	915	970
10	430	575	650	720	795	860	915	975	1030

SIZE	PR/LI	Tread pattern	Main range of use	Rim size	Permitted rims	OD mm +/-1,5%	SW mm +/-2%	Max. air pressure bar	Max. load kg	Speed (km/h)	RC mm +/-2,5%
23x10.50-12	6	**T539 Grey TL**	Industrial	7.00	8.50	571	247	2,2	800	30	1699

SIZE	PR/LI	Tread pattern	Main range of use	Rim size	Permitted rims	OD mm +/-1,5%	SW mm +/-2%	Max. air pressure bar	Max. load kg	Speed (km/h)	RC mm +/-2,5%
23x10.50-12	4/91A6	**DRIVER TL**	Green Area	7.00	8.50	580	236	1,4	615	30	1719

PRESSURE					
psi	**7**	**12**	**14**	**17**	**20**
bar	**0,5**	**0,8**	**1,0**	**1,2**	**1,4**
MAX. LOAD kg					
40	300	400	455	505	555
30	335	445	505	560	**615**
20	380	505	575	640	700
15	405	540	610	680	745
10	430	575	650	720	795

SIZE	PR/LI	Tread pattern	Main range of use	Rim size	Permitted rims	OD mm +/-1,5%	SW mm +/-2%	Max. air pressure bar	Max. load kg	Speed (km/h)	RC mm +/-2,5%
23x10.50-12	6/100A6	**DRIVER TL**	Green Area	7.00	8.50	580	238	2,2	800	30	1720

PRESSURE										
psi	**7**	**12**	**14**	**17**	**20**	**23**	**26**	**29**	**32**
bar	**0,5**	**0,8**	**1,0**	**1,2**	**1,4**	**1,6**	**1,8**	**2,0**	**2,2**
MAX. LOAD kg									
40	300	400	455	505	555	600	640	680	720
30	335	445	505	560	615	665	710	755	**800**
20	380	505	575	640	700	760	810	860	910
15	405	540	610	680	745	805	860	915	970
10	430	575	650	720	795	860	915	975	1030

SIZE	PR/LI	Tread pattern	Main range of use	Rim size	Permitted rims	OD mm +/-1,5%	SW mm +/-2%	Max. air pressure bar	Max. load kg	Speed (km/h)	RC mm +/-2,5%
23x12.50-12	6	**T539 TL**	Industrial	10	10.50I	584	317	2,1	925	30	1734

PRESSURE									
psi	**7**	**12**	**14**	**17**	**20**	**23**	**26**	**29**	**30**
bar	**0,5**	**0,8**	**1,0**	**1,2**	**1,4**	**1,6**	**1,8**	**2,0**	**2,1**
MAX. LOAD kg									
40	360	475	540	600	655	710	760	810	835
30	400	525	600	665	730	790	845	900	**925**
20	455	600	685	760	830	900	965	1025	1055
15	485	635	725	805	885	955	1020	1090	1120
10	515	675	775	860	940	1020	1090	1160	1195

SIZE	PR/LI	Tread pattern	Main range of use	Rim size	Permitted rims	OD mm +/-1,5%	SW mm +/-2%	Max. air pressure bar	Max. load kg	Speed (km/h)	RC mm +/-2,5%
26x12.00-12	4	**T539 TL**	Green Area	10.50I	9.50JA	658	322	1,4	800	30	1936

PRESSURE										
psi	**7**	**9**	**10**	**12**	**13**	**14**	**16**	**17**	**19**	**20**
bar	**0,5**	**0,6**	**0,7**	**0,8**	**0,9**	**1,0**	**1,1**	**1,2**	**1,3**	**1,4**
MAX. LOAD kg										
40	395	435	480	520	560	590	625	655	690	720
30	440	485	535	575	620	655	695	730	765	**800**
20	500	555	610	655	705	745	790	830	870	910
15	530	585	645	695	750	795	840	885	925	970
10	570	625	690	740	800	845	895	940	985	1030

SIZE	PR/LI	Tread pattern	Main range of use	Rim size	Permitted rims	OD mm +/-1,5%	SW mm +/-2%	Max. air pressure bar	Max. load kg	Speed (km/h)	RC mm +/-2,5%
26x12.00-12	8	**T539 TL**	Farming	10.50I	9.50JA	652	320	2,7	1150	30	1936

PRESSURE															
psi	**12**	**14**	**17**	**20**	**23**	**26**	**29**	**32**	**35**	**38**	**39**	**42**	**45**	**48**	**51**
bar	**0,8**	**1,0**	**1,2**	**1,4**	**1,6**	**1,8**	**2,0**	**2,2**	**2,4**	**2,6**	**2,7**	**2,9**	**3,1**	**3,3**	**3,5**
MAX. LOAD kg															
40 FR	510	580	645	705	760	815	870	920	970	1015	1035				
30 FR	565	645	715	785	845	905	965	1020	1075	1125	**1150**				
10 FR	730	830	920	1015	1090	1165	1245	1315	1385	1450	1485				
40 DrW	355	405	450	495	535	570	610	645	675	705	725				
30 DrW	395	450	500	550	595	635	675	715	750	785	**805**				
10 DrW	510	580	645	710	770	820	870	920	970	1015	1040				
10C	625	710	790	865	940	1000	1065	1130	1185	1240	1270	1325	1380	1425	1475

SIZE	PR/LI	Tread pattern	Main range of use	Rim size	Permitted rims	OD mm +/-1,5%	SW mm +/-2%	Max. air pressure bar	Max. load kg	Speed (km/h)	RC mm +/-2,5%
26x12.00-12	8	**T539 TT**	Farming	10.50I-12	9.50JA-12	652	320	2,7	1150	30	1936

PRESSURE															
psi	**12**	**14**	**17**	**20**	**23**	**26**	**29**	**32**	**35**	**38**	**39**	**42**	**45**	**48**	**51**
bar	**0,8**	**1,0**	**1,2**	**1,4**	**1,6**	**1,8**	**2,0**	**2,2**	**2,4**	**2,6**	**2,7**	**2,9**	**3,1**	**3,3**	**3,5**
MAX. LOAD kg															
40 FR	510	580	645	705	760	815	870	920	970	1015	1035				
30 FR	565	645	715	785	845	905	965	1020	1075	1125	**1150**				
10 FR	730	830	920	1015	1090	1165	1245	1315	1385	1450	1485				
40 DrW	355	405	450	495	535	570	610	645	675	705	725				
30 DrW	395	450	500	550	595	635	675	715	750	785	**805**				
10 DrW	510	580	645	710	770	820	870	920	970	1015	1040				
10C	625	710	790	865	940	1000	1065	1130	1185	1240	1270	1325	1380	1425	1475

SIZE	PR/LI	Tread pattern	Main range of use	Rim size	Permitted rims	OD mm +/-1,5%	SW mm +/-2%	Max. air pressure bar	Max. load kg	Speed (km/h)	RC mm +/-2,5%
26x12.00-12	4	**T411 TL**	Green Area/Farming	10.50I-12	9.50JA-12	646	318	1,4	800	30	1919

PRESSURE							
psi	**7**	**12**	**14**	**17**	**20**	**23**	**26**
bar	**0,5**	**0,8**	**1,0**	**1,2**	**1,4**	**1,6**	**1,8**
MAX. LOAD kg							
40 FR	395	520	590	655	720		
30 FR	440	575	655	730	**800**		
10 FR	570	740	845	940	1030		
40 DrW	275	365	415	460	505		
30 DrW	305	405	460	510	**560**		
10 DrW	395	520	595	660	720		
10C	489	640	725	805	885	955	1025

SIZE	PR/LI	Tread pattern	Main range of use	Rim size	Permitted rims	OD mm +/-1,5%	SW mm +/-2%	Max. air pressure bar	Max. load kg	Speed (km/h)	RC mm +/-2,5%
26x12.00-12	4	**T463 TL**	Farming	10.50I	9.50JA	654	318	1,4	800	30	1942

SIZE	PR/LI	Tread pattern	Main range of use	Rim size	Permitted rims	OD mm +/-1,5%	SW mm +/-2%	Max. air pressure bar	Max. load kg	Speed (km/h)	RC mm +/-2,5%
26x12.00-12	8	**T463 TL**	Farming	10.50I	9.50JA	654	318	2,7	1150	30	1942

PRESSURE															
psi	**12**	**14**	**17**	**20**	**23**	**26**	**29**	**32**	**35**	**38**	**39**	**42**	**45**	**48**	**51**
bar	**0,8**	**1,0**	**1,2**	**1,4**	**1,6**	**1,8**	**2,0**	**2,2**	**2,4**	**2,6**	**2,7**	**2,9**	**3,1**	**3,3**	**3,5**
MAX. LOAD kg															
40 FR	510	580	645	705	760	815	870	920	970	1015	1035				
30 FR	565	645	715	785	845	905	965	1020	1075	1125	**1150**				
10 FR	730	830	920	1015	1090	1165	1245	1315	1385	1450	1485				
40 DrW	355	405	450	495	535	570	610	645	675	705	725				
30 DrW	395	450	500	550	595	635	675	715	750	785	**805**				
10 DrW	510	580	645	710	770	820	870	920	970	1015	1040				
10C	625	710	790	865	940	1000	1065	1130	1185	1240	1270	1325	1380	1425	1475

SIZE	PR/LI	Tread pattern	Main range of use	Rim size	Permitted rims	OD mm +/-1,5%	SW mm +/-2%	Max. air pressure bar	Max. load kg	Speed (km/h)	RC mm +/-2,5%
220/60-12 (23x8.50-12)	88A8/76A8	**T539 Soft Grip TL**	Green Area	7.00I	7JA	578	224	2,0	560	40	1736

PRESSURE													
psi	**12**	**14**	**17**	**20**	**23**	**26**	**29**	**32**	**33**	**38**	**41**	**42**
bar	**0,8**	**1,0**	**1,2**	**1,4**	**1,6**	**1,8**	**2,0**	**2,2**	**2,3**	**2,6**	**2,8**	**2,9**
MAX. LOAD kg												
50 FR	275	320	360	400	440	470	505					
40 FR	305	355	400	445	485	525	**560**					
10 FR	400	455	510	565	620	670	720	765	785			
50 DrW	195	225	250	280	310	335	360					
40 DrW	220	250	280	310	345	375	**400**					
10 DrW	285	320	360	395	435	475	510	545	560			
10C	360	400	445	485	530	575	620	665	685	745	785	800

SIZE	PR/LI	Tread pattern	Main range of use	Rim size	Permitted rims	OD mm +/-1,5%	SW mm +/-2%	Max. air pressure bar	Max. load kg	Speed (km/h)	RC mm +/-2,5%
300/65-12	118A8	**T446 TL**	Farming	9.00		687	303	2,6	1250	30	2040

SIZE	PR/LI	Tread pattern	Main range of use	Rim size	Permitted rims	OD mm +/-1,5%	SW mm +/-2%	Max. air pressure bar	Max. load kg	Speed (km/h)	RC mm +/-2,5%
320/60-12	132A8	**T421 TL/TT**	Farming	10.50I		689	320	4,0	2000	40	2049

PRESSURE																			
psi	**14**	**22**	**29**	**36**	**43**	**46**	**49**	**52**	**55**	**58**	**61**	**64**	**67**	**70**	**72**	**77**	**81**	**84**
bar	**1,0**	**1,5**	**2,0**	**2,5**	**3,0**	**3,2**	**3,4**	**3,6**	**3,8**	**4,0**	**4,2**	**4,4**	**4,6**	**4,8**	**5,0**	**5,3**	**5,6**	**5,8**
MAX. LOAD kg																		
50 FR	665	860	1060	1265	1440	1485	1555	1620	1710	1800								
40 FR	740	955	1180	1405	1600	1650	1725	1800	1900	**2000**								
10 FR	950	1220	1490	1760	2040	2160	2215	2295	2365	2455	2560	2675	2800					
50 DrW	470	610	765	905	1010	1035	1080	1125	1190	1260								
40 DrW	520	675	850	1005	1120	1150	1200	1250	1325	**1400**								
10 DrW	675	860	1060	1265	1450	1520	1550	1605	1650	1705	1780	1865	1960					
10C	850	1065	1275	1505	1745	1830	1915	1995	2080	2155	2240	2265	2285	2355	2420	2545	2700	2800

SIZE	PR/LI	Tread pattern	Main range of use	Rim size	Permitted rims	OD mm +/-1,5%	SW mm +/-2%	Max. air pressure bar	Max. load kg	Speed (km/h)	RC mm +/-2,5%
320/60-12	132A8	**T421 Grey TL**	Industrial	10.50I		689	320	4,0	2000	40	2049

PRESSURE																
psi	**14**	**22**	**29**	**36**	**44**	**46**	**49**	**52**	**55**	**58**	**61**	**64**	**67**	**70**	**73**	**77**
bar	**1,0**	**1,5**	**2,0**	**2,5**	**3,0**	**3,2**	**3,4**	**3,6**	**3,8**	**4,0**	**4,2**	**4,4**	**4,6**	**4,8**	**5,0**	**5,3**
MAX. LOAD kg																
50 FR	665	860	1060	1265	1440	1485	1555	1620	1710	1800						
40 FR	740	955	1180	1405	1600	1650	1725	1800	1900	**2000**						
10 FR	950	1220	1490	1760	2040	2160	2215	2295	2365	2455	2560	2675	2800			
50 DrW	470	610	765	905	1010	1035	1080	1125	1190	1260						
40 DrW	520	675	850	1005	1120	1150	1200	1250	1325	**1400**						
10 DrW	675	860	1060	1265	1450	1520	1550	1605	1650	1705	1780	1865	1960			
10C	850	1065	1275	1505	1745	1830	1915	1995	2080	2155	2240	2265	2285	2355	2420	2545

SIZE	PR/LI	Tread pattern	Main range of use	Rim size	Permitted rims	OD mm +/-1,5%	SW mm +/-2%	Max. air pressure bar	Max. load kg	Speed (km/h)	RC mm +/-2,5%
560x140-12	100	**T528**	Snow Groomer	3.00B-12		556	143	8,0	800	20	1705

TIRES 13”

SIZE	PR/LI	Tread pattern	Main range of use	Rim size	Permitted rims	OD mm +/-1,5%	SW mm +/-2%	Max. air pressure bar	Max. load kg	Speed (km/h)	RC mm +/-2,5%
23x5(5.00-13)	10	**T94 TL**	Industrial	4.50	3.75	635	155	8,5	1500	25	1913
610x145-13	112	**T528**	Snow Groomer	4.00		609	150	7,5	1120	20	1856

TIRES 14”

SIZE	PR/LI	Tread pattern	Main range of use	Rim size	Permitted rims	OD mm +/-1,5%	SW mm +/-2%	Max. air pressure bar	Max. load kg	Speed (km/h)	RC mm +/-2,5%
645x160-14	120	**T528**	Snow Groomer	4JA-14		645	160	7,0	1400	20	1953

TIRES 14.5”

SIZE	PR/LI	Tread pattern	Main range of use	Rim size	Permitted rims	OD mm +/-1,5%	SW mm +/-2%	Max. air pressure bar	Max. load kg	Speed (km/h)	RC mm +/-2,5%
200/60-14.5	10	**T448 Extra**	Farming	6.75	8.00	620	206	5,0	950	30	1841
	10	**T536**	Farming	6.75	8.00	628	204	5,0	950	30	1865

TIRES 15”

SIZE	PR/LI	Tread pattern	Main range of use	Rim size	Permitted rims	OD mm +/-1,5%	SW mm +/-2%	Max. air pressure bar	Max. load kg	Speed (km/h)	RC mm +/-2,5%
7.00-15	6	**TRACTION**	Farming	4.50		730	175	2,5	1150	30	2140

PRESSURE									
psi	**12**	**14**	**17**	**20**	**23**	**26**	**29**	**32**	**36**
bar	**0,8**	**1,0**	**1,2**	**1,4**	**1,6**	**1,8**	**2,0**	**2,2**	**2,5**
MAX. LOAD kg									
40 FR	530	610	675	740	795	855	910	960	1035
30 FR	590	675	750	820	885	950	1010	1065	**1150**
20 FR	675	770	855	930	1010	1085	1150	1215	1310
10 FR	760	870	970	1060	1140	1225	1305	1375	1485
40 DrW	385	430	480	525	570	610	650	690	745
30 DrW	425	480	535	585	635	680	720	765	**825**
20 DrW	485	545	610	665	725	775	820	870	940
10 DrW	550	620	690	755	820	875	930	985	1065

SIZE	PR/LI	Tread pattern	Main range of use	Rim size	Permitted rims	OD mm +/-1,5%	SW mm +/-2%	Max. air pressure bar	Max. load kg	Speed (km/h)	RC mm +/-2,5%
11L-15	12	**T510**	Farming	W8		777	285	3,6	1450	40	

PRESSURE															
psi	**12**	**14**	**17**	**20**	**23**	**26**	**29**	**32**	**35**	**37**	**40**	**43**	**46**	**49**	**52**
bar	**0,8**	**1,0**	**1,2**	**1,4**	**1,6**	**1,8**	**2,0**	**2,2**	**2,4**	**2,6**	**2,8**	**3,0**	**3,2**	**3,4**	**3,6**
MAX. LOAD kg															
50 FR	445	535	620	695	765	830	890	950	1005	1060	1110	1160	1210	1260	1305
40 FR	495	595	690	770	850	920	990	1055	1115	1175	1235	1290	1345	1400	**1450**
25 FR	590	710	820	915	1010	1095	1175	1255	1330	1400	1470	1535	1600	1665	1725
10 FR	695	835	965	1080	1185	1290	1385	1475	1565	1645	1730	1805	1885	1960	2030
50 DrW	315	380	440	495	540	590	630	675	715	750	790	825	860	895	925
40 DrW	350	425	490	545	600	655	700	750	795	835	875	915	955	995	**1030**
25 DrW	420	505	580	650	715	780	835	890	945	995	1045	1090	1135	1180	1225
10 DrW	490	595	685	765	845	915	985	1050	1110	1170	1230	1285	1340	1390	1440

SIZE	PR/LI	Tread pattern	Main range of use	Rim size	Permitted rims	OD mm +/-1,5%	SW mm +/-2%	Max. air pressure bar	Max. load kg	Speed (km/h)	RC mm +/-2,5%
29x12.50-15	4	**T411**	Green Area/Farming	10		743	308	1,3	600	50	2207
29x13.50-15	4	**T411**	Green Area/Farming	10		731	334	1,4	600	50	2171
31x15.50-15	8	**T412 TL**	Farming	13		818	402	3,1	1250	50	2429
33x12.50-15	6	**T413 TL**	Green Area/Farming	10		846	320	1,9	1215	50	2513
33x15.50-15	6	**T412 TL**	Green Area/Farming	13		842	395	1,5	1250	50	2501
	8	**T412 TL**	Farming	13		842	395	2,0	1600	50	2501

SIZE	PR/LI	Tread pattern	Main range of use	Rim size	Permitted rims	OD mm +/-1,5%	SW mm +/-2%	Max. air pressure bar	Max. load kg	Speed (km/h)	RC mm +/-2,5%
320/55-15	123A8	**T559 Turf Grip TL**	Green Area/Farming	10LB	9.00	730	320	2,8	1550	40	2190

PRESSURE														
psi	**7**	**12**	**14**	**17**	**20**	**23**	**26**	**29**	**32**	**35**	**38**	**41**	**43**	**46**
bar	**0,5**	**0,8**	**1,0**	**1,2**	**1,4**	**1,6**	**1,8**	**2,0**	**2,2**	**2,4**	**2,6**	**2,8**	**3,0**	**3,2**
MAX. LOAD kg														
50 FR	460	585	675	765	845	925	995	1060	1160	1260	1330	1395		
40 FR	510	650	750	850	940	1030	1105	1180	1290	1400	1475	**1550**		
10 FR	675	840	960	1080	1200	1310	1420	1520	1610	1720	1855	1985	2070	2160
50 DrW	325	415	480	540	600	655	710	765	830	900	940	980		
40 DrW	365	460	530	600	665	730	790	850	925	1000	1045	**1090**		
10 DrW	480	600	680	765	850	925	1005	1080	1155	1235	1330	1415	1470	1520

SIZE	PR/LI	Tread pattern	Main range of use	Rim size	Permitted rims	OD mm +/-1,5%	SW mm +/-2%	Max. air pressure bar	Max. load kg	Speed (km/h)	RC mm +/-2,5%
320/55-15	133A8/121A8	**T421 TL**	Industrial	10LB	9.00	735	315	4,0	2060	40	2200

PRESSURE																				
psi	**12**	**14**	**17**	**20**	**23**	**26**	**29**	**32**	**35**	**38**	**40**	**43**	**46**	**49**	**52**	**55**	**58**	**61**	**64**	**67**
bar	**0,8**	**1,0**	**1,2**	**1,4**	**1,6**	**1,8**	**2,0**	**2,2**	**2,4**	**2,6**	**2,8**	**3,0**	**3,2**	**3,4**	**3,6**	**3,8**	**4,0**	**4,2**	**4,4**	**4,6**
MAX. LOAD kg																				
50 FR	585	675	765	845	925	995	1060	1160	1260	1330	1395	1465	1530	1600	1665	1760	1855			
40 FR	650	750	850	940	1030	1105	1180	1290	1400	1475	1550	1625	1700	1775	1850	1955	**2060**			
10 FR	840	960	1080	1200	1310	1420	1520	1610	1720	1855	1985	2070	2160	2250	2345	2435	2525	2635	2750	2885
50 DrW	415	480	540	600	655	710	765	830	900	940	980	1020	1060	1110	1155	1230	1305			
40 DrW	460	530	600	665	730	790	850	925	1000	1045	1090	1135	1180	1235	1285	1365	**1450**			
10 DrW	600	680	765	850	925	1005	1080	1155	1235	1330	1415	1470	1520	1570	1635	1690	1755	1835	1925	2030

SIZE	PR/LI	Tread pattern	Main range of use	Rim size	Permitted rims	OD mm +/-1,5%	SW mm +/-2%	Max. air pressure bar	Max. load kg	Speed (km/h)	RC mm +/-2,5%
320/70-15	122	**T539**	Industrial	10LB		835	340	2,0	1500		2550

PRESSURE										
psi	**7**	**12**	**14**	**17**	**20**	**23**	**26**	**29**	**30**	**33**
bar	**0,5**	**0,8**	**1,0**	**1,2**	**1,4**	**1,6**	**1,8**	**2,0**	**2,1**	**2,3**
MAX. LOAD kg										
50 FR	585	745	850	955	1055	1155	1255	1350		
40 FR	650	825	945	1060	1175	1285	1395	**1500**		
25 FR	770	980	1120	1260	1395	1530	1660	1785		
10 FR	855	1070	1215	1355	1500	1635	1770	1910	1970	2100
50 Drw	410	520	600	675	755	835	895	955		
40 Drw	455	580	665	750	835	925	995	**1060**		
25 Drw	545	690	790	895	995	1100	1185	1260		
10 Drw	600	750	855	955	1060	1165	1275	1365	1405	1485

SIZE	PR/LI	Tread pattern	Main range of use	Rim size	Permitted rims	OD mm +/-1,5%	SW mm +/-2%	Max. air pressure bar	Max. load kg	Speed (km/h)	RC mm +/-2,5%
380/60-15	114A8	**T539 Soft Grip TL**	Green Area	10.00	12.00	829	375	1,2	1180	40	2440

PRESSURE							
psi	**7**	**11**	**14**	**17**	**20**	**23**	**24**
bar	**0,5**	**0,8**	**1,0**	**1,2**	**1,4**	**1,6**	**1,7**
MAX. LOAD kg							
50 FR	655	835	950	1060			
40 FR	725	925	1055	**1180**			
10 FR	960	1200	1355	1510	1670		
50 Drw	460	585	675	765			
40 DrW	510	650	750	**850**			
10 DrW	675	845	960	1080	1200		
10C	880	1070	1200	1325	1465	1600	1675

SIZE	PR/LI	Tread pattern	Main range of use	Rim size	Permitted rims	OD mm +/-1,5%	SW mm +/-2%	Max. air pressure bar	Max. load kg	Speed (km/h)	RC mm +/-2,5%
400/50-15	135A8	**T463**	Farming	13LB		795	400	3,2	2180	40	2351

PRESSURE																				
psi	**7**	**11**	**17**	**23**	**26**	**28**	**31**	**34**	**37**	**40**	**43**	**46**	**48**	**51**	**54**	**57**	**60**	**63**	**67**
bar	**0,5**	**0,8**	**1,2**	**1,6**	**1,8**	**2,0**	**2,2**	**2,4**	**2,6**	**2,8**	**3,0**	**3,2**	**3,4**	**3,6**	**3,8**	**4,0**	**4,2**	**4,4**	**4,6**
MAX. LOAD kg																			
50 FR	600	765	980	1225	1310	1395	1510	1620	1735	1855	1910	1960							
40 FR	670	850	1090	1360	1455	1550	1675	1800	1930	2060	2125	**2180**							
10 FR	880	1100	1395	1705	1875	2005	2115	2245	2400	2550	2710	2870	2935	3040					
50 DrW	425	540	700	880	930	980	1055	1125	1215	1305	1350	1395							
40 DrW	470	600	775	975	1035	1090	1170	1250	1350	1450	1500	**1550**							
25 DrW	560	715	920	1160	1230	1295	1395	1485	1605	1725	1785	1845							
10 DrW	620	775	990	1220	1345	1430	1495	1575	1670	1770	1895	2020	2075	2155					
10 C	810	985	1225	1465	1585	1730	1865	1970	2065	2155	2235	2345	2460	2585	2715	2865	2980	3030	3080

SIZE	PR/LI	Tread pattern	Main range of use	Rim size	Permitted rims	OD mm +/-1,5%	SW mm +/-2%	Max. air pressure bar	Max. load kg	Speed (km/h)	RC mm +/-2,5%
690x180-15	100A8	**TRACTION**	Farming	4.50E		685	179	3,3	800	40	2034

For technical notes about pressure tables please refer to page 244.

Common technical notes for Radial tires

IF (Improved Flexion) = up to 20% more load at the same pressure versus standard technology.

VF (Very High Flexion) = up to 40% more load at the same pressure versus standard technology.

CFO (Cyclic Field Operation) = up to 20% more load at the same pressure versus standard technology and a further load increase in cyclic field application, without any increase in inflation pressure.

SW = On the nominal RIM. (Not referred to the PERMITTED RIMS).

SRI = Speed Radius Index – value to be used for the calculation of the theoretical tractor speed during European Union homologation and for the interchangebility of different tire sizes.

70/65/50/40/30/25 = On road transport at 70/65/50/40/30/25 Km/h.
For intensive road transport at 40, 50, 65 e 70 Km/h the pressure should be increased by 0,4 bar.

10 LT = Maximum speed 10 Km/h. Surface treatment with low torque value.

10 HT = Maximum speed 10 Km/h. Field application with high torque value.

S = Single fitment.

H (*) = Maximum speed 10 Km/h. Harvesting machines in cyclic loading service and farm to field transit.

IMPORTANT: the inflation pressure is established considering the application and the load for each tire.

For dual mounting use the pressure correspondent to the load per each wheel divided by 0.88.

Specific technical notes for Radial tires

TM1000 PT	**(*) =** 10 LT at 0.4 bar only dual/triple use **(**) =** 10 HT at 0.6 bar only dual/triple use For intensive road transport above 40 km/h the pressure could be increased by 0.4 bar. All load value for ground slopes up to 20% (above 20% consult Trelleborg)
TM1000 HP	**(*)** Below 0,8 bar only for dual/triple use in LT application. For intensive road transport above 40 Km/h the pressure have to be increased by 0,4 bar. All load value for ground slopes up to 20% (above 20% consult Trelleborg).
TM1060	**(*) =** 10 HT at 0,6 bar only in dual/triple use. For intensive road transport above 40 Km/h the pressure have to be increased by 0,4 bar. All load value for ground slopes up to 20% (above 20% consult Trelleborg).
TM800	**(°) =** For these rims please contact the Trelleborg expert in your area.
TM800 HS	**(°) =** For these rims please contact the Trelleborg expert in your area.
TM700 PT	**(°) =** For these rims please contact the Trelleborg expert in your area.
TM150	For application on hillside, increase the pressure by 0,5 bar.
TM100	**10 Cyc =** Maximum speed 10 Km/h. Field application with 20% slope max. **TO BE MOUNTED IN TUBELESS VERSION ONLY FOR TRACTORS GREATER THAN 190 HP**
TM3000	**(*) =** Single mounting. **Up to 40 km/h =** only for road application. **15 Cyc =** Cyclic application on field up to 15 Km/h. For cyclic application on hill side over 10% up to 20% slopes, pressure must be increase by 0,5 bar. For special applications (different from classic cyclic harvesting such as cereals and/or classic oilseed plants) please contact the Trelleborg expert in your area.
TM2000	**10 LT =** Maximum speed 10 Km/h. Surface treatment with low torque value. Harvesting machines in cyclic loading service and field to farm transit. Slope up to 40%. **10 HT =** Maximum speed 10 Km/h. Field application with high torque value. **10 Cyc =** Maximum speed 10 Km/h. Harvesting machines in cyclic loading service and field to farm transit. Slope up to 20%.
TWIN RADIAL	**65/50/40 =** On road transport at 65/50/40 Km/h. For intensive road transport at 50 and 65 Km/h the pressure should be increased by 0,4 bar. **30 =** On road transport at 30 Km/h and field application up to 30 Km/h. **10 =** On field application up to 10 Km/h with self-propelled machines (eg. harvesting machine).
TH400-TH500	**50/40/35/30/25 =** use on the road up to a max speed of 50/40/35/30/25 Km/h. **10 Cyc =** Max speed 10 Km/h with cyclic load. **Stat =** Static load at 0 Km/h. For Torque application refer to 30 km/h.

Common technical notes for Conventional tires

SW = On the nominal RIM. (Not referred to the PERMITTED RIMS)

SRI = Speed Radius Index - value to be used for the calculation of the theoretical tractor speed during European Union homologation and for the interchangeability of different tire sizes.

F = Refers to tractors with mounted implements operating in the field.

IMPORTANT: the inflation pressure is established considering the application and the load for each tire.

Load data in the table is valid for one wheel only.
Reference speed and load are shown in **bold**.

TL = Tubeless

Specific technical notes for Conventional tires

T414	**TL =** Tubeless, but tube can be used. All tubes have valve type TR218 if not other is specified. **Tires for agricultural tractors and machines** **25/30/40/50 =** 25/30/40/50 Km/h road service. (Note: for frequent or long distance road transport, increase the inflation pressure by 30%). **10 HT =** 10 Km/h field service with high torque. (Note: in extra heavy and continuous field service such as ploughing, increase inflation pressures by 30%). **10 LT =** 10 Km/h field service with low torque. **10 C =** 10 Km/h cyclic field service for combine harvesters with a gradually increasing load (filling or grain tank) up to max. load and unloading before transportation on field or road. Min. load may not exceed 60% of max. load. The ground must not have slopes > 20% (> 11 degree).
TM90	**40/30/25 =** On road transport at 40/30/25 Km/h. For intensive road transport at 40 Km/h the pressure should be increased by 0,4 bar. **10 LT =** Maximum speed 10 Km/h. Surface treatment with low torque value. Harvesting machines in cyclic loading service and field to farm transit. Slope up to 40%. **10 HT =** Maximum speed 10 Km/h. Field application with high torque value. **S =** Single fitment. **H (*) =** Maximum speed 10 Km/h. Harvesting machines in cyclic loading service and farm to field transit. **For dual mounting use the pressure correspondent to the load per each wheel divided by 0.88.**
TD27	**SW =** On the RIM in bold.
T404 - T421 **T423 - T478**	**Twin Implement LI/SS** **TL =** Tubeless, but tube can be used. All tubes have valve type TR218 if no other is specified. All load data refer to LLV = Low Load Variation (<50%). HLV=High Load Variation (>50%). **For dual mounting use the pressure correspondent to the load per each wheel divided by 0.88.** **Tires for trailers, implements and agricultural machines** **50 - 40 =** 50 and 40 Km/h road service, either free rolling or driving. **10 =** 10 Km/h field service in either free rolling or driving (load capacities of driving wheel are 30% < free rolling wheel). **25 =** 25 Km/h road service in driving mode (combine harvesters). **10 C =** 10 Km/h cyclic field service for combine harvesters with a gradually increasing load (filling or grain tank) up to max. load. Min. load may not exceed 50% of max. load. The ground must not have slopes > 20% (> 11 degree). In HLV service the LLV load data can be increased by 20 % if the inflation pressure is increased by 30%. HLV is suitable only for shorter transport service. LLV=Low Load Variation (<50%). HLV=High Load Variation (>50%). In longer road transport with heavy vehicles or vehicles with a high gravity point, use LLV data with an increase in the inflation pressure of 30%. Implement tires in the steering wheel position on self propelled vehicles must use the load data for driving tires.

T421 - T423 **T428 - T440**	**Tires for agricultural machines/vehicles with a high rate of road service or at high speeds** **TL =** Tubeless. Tubes are not suitable for use in AMPT tires. **0 =** 0 Km/h concerns accidental loads (e.g. When a machine is breaking/lifting with its bucket). **10 =** 10 Km/h concerns field service. **40 - 65 - 70 =** 40, 65 and 70 Km/h concerns road service. **Note:** Always check that the rims/wheels are suitable for the service. If loads are to exceed 10000 kg, please contact the Trelleborg expert in your area.
T404	**Tires for gentle service on green areas** **TL =** Tubeless. Tubes are not suitable for use in Garden Tractor tires. **25** = 25 Km/h concerns service on green areas and road. **40 =** 40 Km/h concerns service on road only.
AW305 - AF302 **T452 - T306** **AW309**	**Implement Standard** Tires for trailers, implements and agricultural machines. **Speed 50 to 40 =** 50 to 40 Km/h road service, either free rolling or driving. **Speed 10 =** 10 Km/h field service, either free rolling or driving. All load data refer to LLV service. **LLV =** Low Load Variation (>50%). **HLV =** High Load Variation (50%). In HLV service the LLV load data can be increased by 20% if the inflation pressure is increased by 30%. HLV in road speeds are suitable for shorter transport service only. **In longer road transports with heavy vehicles or vehicles with a high gravity point, use LLV data and increase the inflation pressure with 30%.** Free rolling tires on tractor steering wheels - use LLV free rolling data minus 20%. **TL =** Tubeless, but tube can be used.
RIB TRAILER	**Tires for high speed agricultural trailer** **80 - 40 =** 80 and 40 Km/h road service (free rolling). **10 =** 10 Km/h concerns field service (free rolling).
T410 **Agroforest**	**Tractor tires for Agroforest use** **TT =** Tube type. All tubes have valve type TR218 if not other is specified. **10-30-40-50 =** 10-30-40-50 Km/h road service. **10HT =** 10 Km/h service in terrain with or without stones/rocks.
T440 - T480 **T428 - T421** **T414 - T404**	**Twin Forestry LI/SS-design** Load data in the table is valid for one wheel only. Reference speed and load are shown in bold. All tires are tube type. All tubes have valve type TR218. SB = Steel belt reinforced. LS = Log service, 2 = Tread code. HT = High torque, also refers to Skidder service. LT = Low torque and refers to service on forwarders and harvesters. **Tires for forestry use, LI version** 40 road = 40 Km/h road service. 10HT, LT = High torque, also refers to Skidder service in Light terrain = 10 Km/h service in flat terrain without boulders/stones. 10HT, HT = High torque, also refers to Skidder service in Heavy terrain = 10 Km/h service in rough terrain with or without boulders/stones. 10HT, HT = High torque, also refers to Skidder service in Very Heavy terrain = 10 Km/h service in very rough terrain with very high proportion of boulders/stones. 10LT, LT = Low torque and refers to service on forwarders and harvesters in Light terrain = 10 Km/h service in flat terrain without boulders/stones. 10LT, HT = Low torque and refers to service on forwarders and harvesters in Heavy terrain = 10 Km/h service in rough terrain with or without boulders/stones. 10LT, HT = Low torque and refers to service on forwarders and harvesters in Very Heavy terrain = 10 Km/h service in rough terrain with very high proportion of boulders/stones. **Twin Forestry PR-design** Most of the tires are tube type. All tubes have valve TR218. Some tires are marked tubeless but it is recommended to use tube. **SB =** Steel belt reinforced. **Tire for all-round service =** can be used on all type of machine and in tandem position with track. **Tire for single axle fitment =** can only be used on single axles. By use of tracks, the air pressure shall be increased to max. level for what is started by very heavy terrain.

	Tires for forestry use, PR version **40 - 30 road =** 40 and 30 Km/h road service. **10HT or 10LT Light terrain =** 10 Km/h service in flat terrain without occurrence of stone blocks. **10HT or 10LT Heavy terrain =** 10 Km/h in rought terrain with or without stone blocks. **10HT or 10LT very Heavy terrain =** 10 Km/h in very rough terrain with very large occurrence of stone blocks. * When using track the inflation pressure according to the table must be used independent of the wheel load. Twin 428 only. For general information about inflations pressure, fitting and handling of forestry tires please see page. 290 - 291.
T418 SKIDDER	**Tires for forestry use** Load data in the table is valid for one wheel only. Reference speed and load are shown in bold. **40 - 30 road =** 40 and 30 Km/h road service. **10HT or 10LT Light terrain =** 10 Km/h service in flat terrain without occurrence of stone blocks. **10HT or 10LT Heavy terrain =** 10 Km/h in rought terrain with or without stone blocks. **10HT or 10LT very Heavy terrain =** 10 Km/h in very rough terrain with very large occurrence of stone blocks.
T440 EXC **T480 EXC - T459**	**TL =** Tubeless, but tube can be used. Il tubes have valve type TR218 if not other is specified. **Tires for industrial tractors** **40-50 =** 40-50 Km/h road service. **10 =** 10 Km/h road and field service. **0 =** 0 Km/h accidental loads (eg. when a machine is breaking/lifting with its buckets). **Note!** By loads exceeding 10000 kg, please contact the Trelleborg expert in your area.
Light service tires	Max load and pressure in the table above are for free rolling service LLV at speed 10, 20 25, 30, 40 and 100 Km/h. **LLV =** Low Load Variation, e.g. implements (ploughs, cultivator, etc.) and trailes with minor variations in load. For LLV in Driving service decrease the load with 30%. **HLV =** High Load Variation e.g. trailers, e.g. trailers with significant variations in load. For HLV the maximum load can be increased by 20% if the inflation pressure increases with 30%. **RC =** Rolling circumference = Calculated values.

Tire marking

A series of numbers and codes internationally used exist for the identification of tire structures, dimensions and main applications. This group of codes and numbers is collectively known as the “markings” and permits precise identification of the tire.

Here below some examples:

1		TRELLEBORG	Brand name and / or manufactures name
2		TM800 or TWIN 421	Product name (tread pattern identification)
3		SIZE DESCRIPTION	Metric tire size designation
	a	600/65R38 600/60-30.5 520/70B30	600 = section width (mm) 65 = aspect ratio between section height and section width (%) R = radial construction 38 = rim diameter (inch) - = cross ply construction B = bias belted construction
	b	650/60-26.5 LS2	Metric tire size designation for forestry tires LS = log service 2 = tread depth code
	c	7.50-16	Coded tire size designation 7.50 = section width (inch) - = cross ply construction 16 = rim diameter (inch)
	d	20.5x10.0-10	American tire size designation 20.5 = overall diameter (inch) x = versus 10.0 = section width (inch) - = cross-ply construction 10 = rim diameter (inch)
4	**a**	157 A8 (154 B)	Service description 157 = load index for the tires nominal load capacity A8 = speed symbol for the tires nominal speed 154 = additional load index at max speed B = additional speed symbol for max speed
	b	8 PR	Tire carcass strength identification 8 = strength index PR = ply rating (but does not necessarily represent the number of cord plies in the tire)
4	**c**	166 A8 154 A8	Service description (implement) Load index and speed symbols as 4.a free rolling tire driving tire

d	161A8 HT 161 A2 LT 168 A2	Service description (forestry) Load index and speed symbols as 4.a 161 A8 = service on road HT 161 A2 = High Torque service (skidders) LT 168 A2 = Low Torque service (forwarders, harvesters)
e	99J	Service description (high speed trailer) Load index and speed symbols as 4.a
5	IMP or other	Service type identification IMP = Implement Other service identifications are: FORESTRY = tires for forestry machines AGROFOREST = tires for mixed agri and forestry service AMPT = Agricultural Multi Purpose Tire : tires for a high rate of road service up to 65 Km/h LOADER = tires for wheel loaders and back hoe loaders GARDEN TRACTOR = tires for gentle service on green surfaces INDUSTRIAL = tires for Industrial service FRT = Free Rolling Tire: commercial vehicle tire used as high speed implement trailer tire
6	STEEL BELT	The tire has a belt of steel cord (forestry tires)
7	TUBELESS	Tire to be used without a tube (some tubeless tires are marked that they are allowed to be used with a tube)
8		Arrow indicating rotating direction of a traction tire in driving service
9		Pictogram showing the max seating pressure (varies for different type of tires)
10	SAFETY WARNING	Warning text which states the items to be paid attention to when fitting the tire
11	 106R-00 0001	ECE type approval mark and number (often called “e-marking”)

Technical advice

For more detailed information, consult our complete Catalogue containing all technical information on our Web page www.trelleborgtirebook.com, or download the Tire Book app from App Store or Google Play.

Remark: Other numbers (small figures) can be found on the tire sidewall.
For any question please contact the Trelleborg expert in your area.

3d
4e
11
7
2
10
1
HIGH SPEED

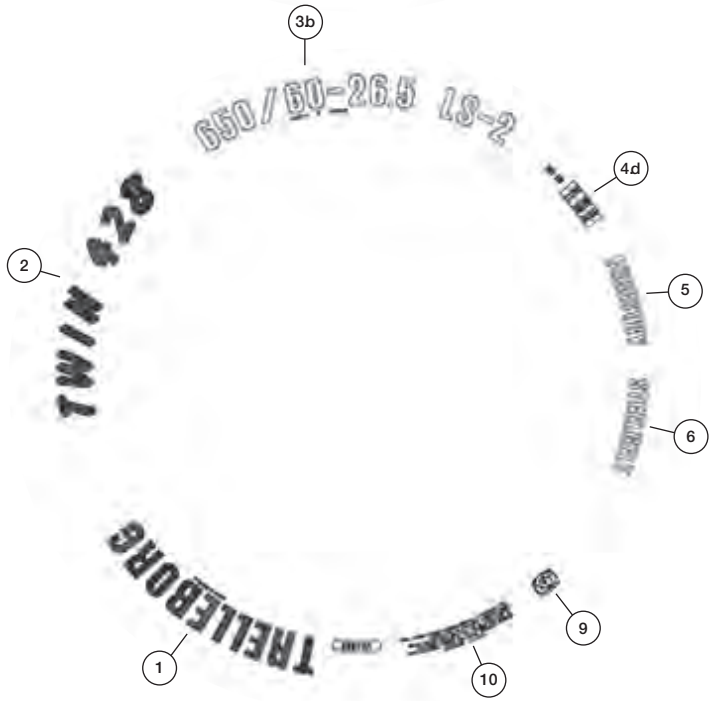
3b
650/60-26.5 LS-2
4d
2
5
6
9
1
10
TWIN 428
TRELLEBORG

Technical data symbols

The following symbols are used in the technical data charts

Dimensions

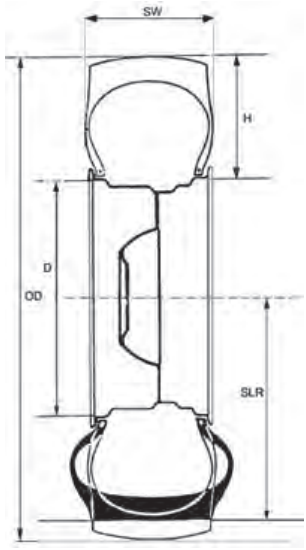

Size
States tire size designation.

LI - SS
States tire Load Index and Speed Symbol.
LI is a code for the tire load capacity at its nominal maximum speed.
SS is a code indicating the tire nominal maximum speed.

PR
States tire ply rating and is a strength code for the tire carcass.

Type or Tread pattern
States the tire tread symbol or pattern. If it is a tubeless tire, the tire is marked with the symbol TL after the tread symbol.

New tire
States tire diameter and width in mm, when the tire is originally mounted with a nominal inflation pressure.

SW
The Section Width of the unloaded tire. If the tire is fitted on a rim which is narrower (or wider) than that underlined, the section width is obtained by decreasing (or increasing) the value shown by 40% of the rim width variation (in millimetres).

OD
The Overall Diameter of the unloaded tire.

RC
Rolling Circumference at reference load and pressure. Distance covered in one complete revolution of the wheel on an asphalt road. Value in mm measured according to ISO11795.

SLR
Static Loaded Radius is the radius from the wheel centre down to the ground, at reference load and pressure. The difference between unloaded radius and static loaded radius is called deflection. This value varies between 15-30% of the tire section height, depending on tire type.

SRI
The Speed Radius Index states a theoretical value only to be used for calculation of the max speed of a vehicle according to EU homologation procedures.

Tire in service
States the tire max. diameter and width in mm that the tire may reach during its lifetime. These are the measurements manufacturers should pay attention to when designing new vehicles and machinery, to obtain adequate clearance for the wheel.

Rim

States recommended rim size. Rim width is expressed in inches e.g. **16.00**. A letter symbol in connection with rim width represents the code for the rim contour. The rim diameter is expressed in inches.

Rim diameters ending with 0.5 (17.5, 22.5 etc.) are 15-degree rims. Remaining rims are 5-degree (34, 38, 42 etc.). In the table only the rim width is stated.
Please check the list of rims included.

Tube

States the tube to be used for each size.
Example of tube marking:

STT brand	Size designation	valve
	7.50 – 16 (*)	**TR15**
	520/70-30 / 18.4-30 (**)	**TR218**
TWIN brand	Size designation	valve
	600/55-30.5 / 600/60-30.5 (**)	**TR218**

(*) The tube is marked in the same way as the corresponding type. No marking on the tube concerning valve type.
(**) Double size marking means that the tube fits the corresponding tire sizes.
No marking on the tube concerning valve type.

Speed

The speed indicated in the table represents the maximum speed in use for the tire at the given load and pressure. Speed notation in bold types states the nominal speed for the tire.

Speed 1 Km/h = 0,62 mph

Free rolling and driving wheel

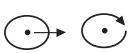

These are new symbols used for Implement tires and states free rolling and driving service . Loadwise, the load capacity is 30% less for driving wheels than for free rolling wheels.

Inflation pressure

The inflation pressures refer to tires at ambient temperature. The values given in the tables represent the **"reference pressure"** for the load and speed conditions shown. The actual pressure of the tire must be established in accordance with the mechanical characteristics of the vehicle, the additional load from the use of equipment and additional storage facilities, as well as the load conditions.

These values can be obtained from the **"load / pressure / application"** tables according to the use:

Tractor tires

- on road at various speeds
- on field at "high torque" (ploughing, harrowing, etc.)
- on field at "low torque"(surface works, sowing, etc.)
- cyclic loading service on harvesting machines

Implement tires

- free rolling wheel - road service
- free rolling wheel - field service
- driving wheel - road service
- driving wheel - field service

Forestry tires

- on road
- on light terrain
- on heavy terrain and road service
- on very heavy terrain

Green area and garden tires

- on road
- on field

AMPT tires or loaders and excavator tires

- road service
- field service

For tires with A8 or D marking, in frequent or long distance road transport at speeds of more than 30 Km/h, the inflation pressure should be increased by 0.4 bar over the nominal value obtained for effective loads on the axles.

Inflation pressure **1 bar = 100 kPa**
1 bar = 14,5 psi

Load capacity

The load capacity is the maximum load (expressed in Kg) a tire is permitted to carry under specified operating conditions. The nominal load is stated in bold type.

Tire size correspondence

ETRTO - SRI	Standard series	Standard series /80-/85	Wide series /70-/75	Extra large series /60-/65-/85	Narrow series /90-/95- /105	TWIN TRACTOR /45-/50	TWIN TRACTOR /55	TWIN TRACTOR /60-/55
350			240/70R16					
360	6.50-16		260/70R16					
360	9.0/75-16		260/70R16					
390	7.50-16	250/80-16	280/70R16					
410	7.50-18	250/80-18	280/70R18	320/65R18				
425	7.50R20		280/70R20	340/65R18			400/55-17.5	
450	9.5R20	260/80R20	300/70R20					
475	11.2R20	280/85R20	320/70R20					
500	12.4R20	320/85R20	360/70R20					360/60-24
525			380/70R20					
525	11.2R24	280/85R24	320/70R24					
550	12.4R24	320/85R24	360/70R24	420/65R24		600/50-22.5		400/60-26.5
575	13.6R24	340/85R24	380/70R24	440/65R24				
600	14.9R24	380/85R24	420/70R24	480/65R24	230/95R32			500/60-26.5
625	16.9R24	420/85R24	480/70R24	540/65R24	270/95R32	710/45-26.5	600/55-26.5	
650	16.9R26		480/70R26	540/65R26				
750			620/75R26					
575	11.2R28	280/85R28	320/70R28					
600	12.4R28	320/85R28	360/70R28		230/95R32			500/60-26.5
625	13.6R28	340/85R28	380/70R28	440/65R28	270/95R32			600/55-26.5
650	14.9R28	380/85R28	420/70R28	480/65R28 520/60R28	230/95R36			
675	16.9R28	420/85R28	480/70R28	540/65R28 600/60R28			600/55-30.5	
675	14.9R30	380/85R30	420/70R30				600/55-30.5	
700	16.9R30	420/85R30	480/70R30	540/65R30 600/65R28 600/60R30		750/45-30.5		600/60-30.5
725	18.4R30	460/85R30	520/70R30 600/70R28		210/95R44	750/50-30.5		
825			650/75R32					
875			710/75R32	800/65R32				
925			800/70R32	900/60R32				
725	14.9R34	380/85R34						
750	16.9R34	420/85R34	480/70R34 600/70R30	540/65R34 710/60R30	230/95R44			
775	18.4R34	460/85R34	520/70R34	600/65R34 650/60R34		800/50-34	710/55-34 800/55-30.5	
825	20.8-34			650/65R34 710/60R34				
725	13.6R36	340/85R36			210/95R44			
700					270/95R38			
725	12.4R38	320/85R38						
750	13.6R38	340/85R38 380/80R38						
775	14.9R38	380/85R38	400/75R38		270/95R44			
800	16.9R38	420/85R38	480/70R38 600/70R34	540/65R38	230/95R48			600/60-38
825	18.4R38	460/85R38	520/70R38	600/65R38 650/60R38 710/60R34	270/95R48 300/95R46			650/60-38
875	20.8R38	520/85R38	580/70R38	600/65R42 650/65R38 710/60R38		850/50-38		710/65-38 900/60-32
875	18.4R42	480/80R42		600/65R42				
925	20.8R42	520/85R42	580/70R42 620/70R42 650/75R38 710/70R38	650/65R42 710/60R42			850/55-42	750/65-38 850/60-38
875					380/90R46			
975	20.8R46	480/80R50 520/85R46	710/70R42 800/70R38	650/85R38 900/60R38	380/90R50 380/105R46			
1025			710/75R42 710/65R46	900/60R42 750/70R44	380/90R54 380/105R50			
1125			750/75R46	900/65R46				
925					300/95R52			

Modifying the original fitment of the machine may require a new set of rims.
Verify that the alternative tire size is fitted on an approved rim contour.

Load table

Conversion of load indices (LI) into load capacities per tire (Kg)

LI	KG	LI	KG	LI	KG	LI	KG	LI	KG
50	190	85	515	120	1400	155	3875	190	10600
51	195	86	530	121	1450	156	4000	191	10900
52	200	87	545	122	1500	157	4125	192	11200
53	206	88	560	123	1550	158	4250	193	11500
54	212	89	580	124	1600	159	4375	194	11800
55	218	90	600	125	1650	160	4500	195	12150
56	224	91	615	126	1700	161	4625	196	12500
57	230	92	630	127	1750	162	4750	197	12850
58	236	93	650	128	1800	163	4875	198	13200
59	243	94	670	129	1850	164	5000	199	13600
60	250	95	690	130	1900	165	5150	200	14000
61	257	96	710	131	1950	166	5300	201	14500
62	265	97	730	132	2000	167	5450	202	15000
63	272	98	750	133	2060	168	5600	203	15500
64	280	99	775	134	2120	169	5800	204	16000
65	290	100	800	135	2180	170	6000	205	16500
66	300	101	825	136	2240	171	6150	206	17000
67	307	102	850	137	2300	172	6300	207	17500
68	315	103	875	138	2360	173	6500	208	18500
69	325	104	900	139	2430	174	6700	209	19000
70	335	105	925	140	2500	175	6900		
71	345	106	950	141	2575	176	7100		
72	355	107	975	142	2650	177	7300		
73	365	108	1000	143	2725	178	7500		
74	375	109	1030	144	2800	179	7750		
75	387	110	1060	145	2900	180	8000		
76	400	111	1090	146	3000	181	8250		
77	412	112	1120	147	3075	182	8500		
78	425	113	1150	148	3150	183	8750		
79	437	114	1180	149	3250	184	9000		
80	450	115	1215	150	3350	185	9250		
81	462	116	1250	151	3450	186	9500		
82	475	117	1285	152	3550	187	9750		
83	487	118	1320	153	3650	188	10000		
84	500	119	1360	154	3750	189	10300		

Conversion factors

METRIC UNIT		IMPERIAL UNIT	
1 millimeter (mm)	= 0.03937 inches	1 inch (“)	= 25.4 millimeters
1 meter (m)	= 1.09361 yards	1 yard	= 0.9144 meters
1 kilometer (Km)	= 0.62137 miles	1 mile (mi)	= 1.609344 kilometers
1 liter (l)	= 0.21997 gallons (UK)	1 gallon (UK)	= 4.5461 litres
1 liter (l)	= 0.26417 gallons (USA)	1 gallon (USA)	= 3.7854 litres
1 gram (g)	= 0.035274 ounces	1 ounce (oz)	= 28.34952 grams
1 kilogram (Kg)	= 2.205 pounds	1 pound (lb)	= 0.45359 kilograms
1 kilometer per hour (Km/h)	= 0.62137 miles per hour	1 mile per hour (mph)	= 1.609344 kilometers per hour
1 kilopascal (kPa)	= 0.145 pounds per square inch	1 pound per square inch (psi)	= 6.895 kilopascal
1 bar	= 100 kilopascal	1 pound per square inch (psi)	= 0.06895 bar
1 kilowatt (kW)	= 1.34 horsepower	1 horsepower (HP)	= 0.746 kilowatts
1 Newton meter (N.m)	= 0.113 inch pound	1 inch pound (in-lb)	= 8.85 inch-pound

Temperatures

(Fahrenheit - 32) x 0.55 = Celsius	32	40	50	60	70	75	85	95	105	140	175	212	°F
(Celsius x 1.8) + 32 = Fahrenheit	0	5	10	15	2	25	30	35	40	60	80	100	°C

Speed

Speed code	A1	A2	A3	A4	A6	A8	B	C	D	E	F	J
Km/h	5	10	15	20	30	40	50	60	65	70	80	100
mph	3	6	9	12	19	25	31	37	40	43	50	62

Km/h to mph x 0,62 mph to Km/h x 1,61

Pressures

kPa (kilopascal)	60	100	120	140	160	180	200	240	280	320	360	400	500
bar = kg/cm^2	0,6	1,0	1,2	1,4	1,6	1,8	2,0	2,4	2,8	3,2	3,6	4,0	5,0
psi = (pound/square inches)	9	14	17	20	23	26	29	35	41	46	52	58	72

psi to bar x 0,06895 bar to psi x 14.50326 kPa to bar x 100,00 bar to kPa x 0,01 kPa to psi x 7,00 psi to kPa x 0,142

W and DW rims

Dimensions (mm)

Rims					
	A		G ±1	H min	P min
W6	152,5	± 2,5	22,5	20,5	23,5
W7	178				
W8	203				
W8L					
W9	228,5		25,5		27
W10	254				
W10L			22,5		
W11	279,5		25,5		
W12	305				
W13	330				
W14L	355,5				
W15L	381	± 5			33
W16L	406,5				
W18L	457,2				
DW10	254	± 2,5			27
DW11	279,5				
DW12	305				
DW13	330				
DW13L	330				36,5
DW14L	355,5	± 5		27	50,5
DW15L	381				
DW16L	406,5				
DW18L	457				
DW20B	508	± 6,5	29		
DW21B	533,5				
DW23B	584				
DW25B	635				
DW27B	686				
DW28B	711				
DW30B	762				

L = Reduced flange's height
DW-A rims have been replaced by DW-B and they can be used with full interchargeability

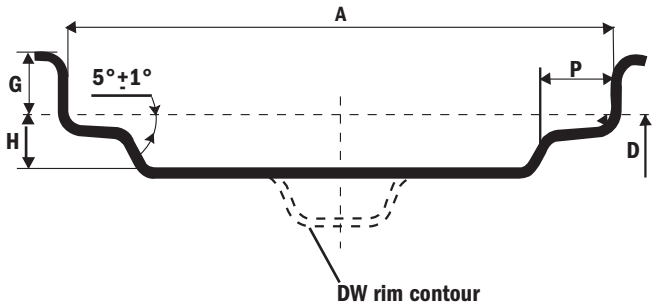

Diameters		
Nominal rim - diameter	**C1: Mandrel circumference - mm. (1)**	**Diameter D - mm.**
16”	1270,0	405,6
18”	1447,1	462,0
20”	1606,7	512,8
24”	1925,9	614,4
26”	2085,5	665,2
28”	2245,1	716,0
30”	2404,6	766,8
32”	2564,2	817,6
34”	2723,8	868,4
36”	2883,4	919,2
38”	3043,0	970,0
40”	3205,3	1020,8
42”	3362,2	1071,6
44”	3521,8	1122,4
48”	3841,0	1224,0
50”	4002,8	1274,8
52”	4162,3	1325,6
54”	4319,5	1376,4

(1) Mandrel circumference (C1±1.2 mm) for ropes containing 16 mm. balls

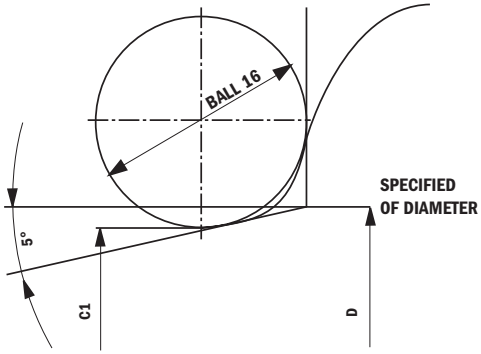

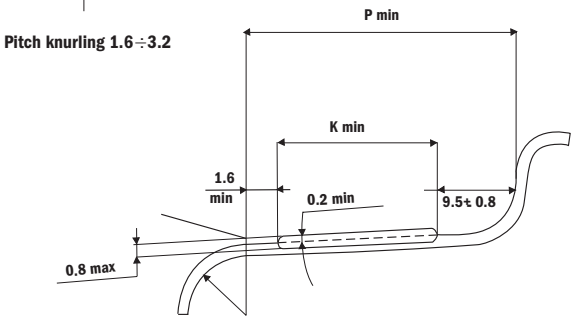

Drop centre rims

Dimensions (mm)

Rims				
	A		G ±1	H min
4.00E	101,5	± 2	20	19
4.50E	114,5		20	23
5JA	127		16	19
5.00F	127		22,5	26
5.375I	136,5		16	22
5.50F	139,5		22,5	26
6.00F	152,5	± 2.5	22,5	26
6LB	152,5		22,5	26
7.00I	178		16	23
7JA	178		16	19
9.00	228,5		19	34
9	228,5		25,5	31
11	279,5		25,5	31
12	305		25,5	31
13.00	330		19	31
13.0	330		25,5	44
13.00	330		25,5	31
14	355,5	± 5	25,5	31
16	406,5		19	31

Diameters	
Nominal rim - diameter	**Diameter D - mm.**
8”	202,4
10”	253,2
12”	304
13”	329,4
14”	354,8
15”	380,2
15.3”*	388,3
16”	405,6
17”	436,6
18”	462
19”	487,4
20”	512,8
24”	614,4

* Rim 9.00 only

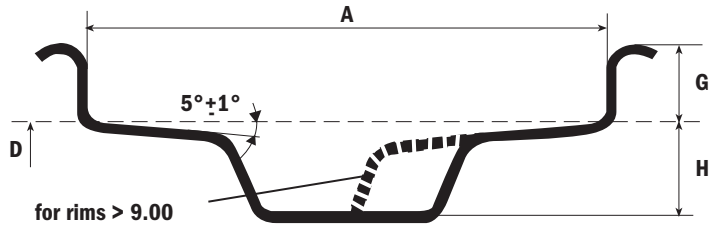

AG 15° drop centre rims

Diameters		
SW Code	**Nominal Diameter**	**Rim SW A+-5**
AG8.00	15,5	203,2
AG11.75	17,5	298,5
AG11.75	22,5	298,5
AG13.00	15,5	330
AG13.00	22,5	330
AG13.00	26,5	330
AG16.00	22,5	406,5
AG16.00	26,5	406,5
AG20.00	22,5	508
AG20.00	26,5	508
AG20.00	30,5	508
AG24.00	22,5	609,5
AG24.00	26,5	609,5
AG24.00	30,5	609,5
AG28.00	26,5	711
AG28.00	30,5	711

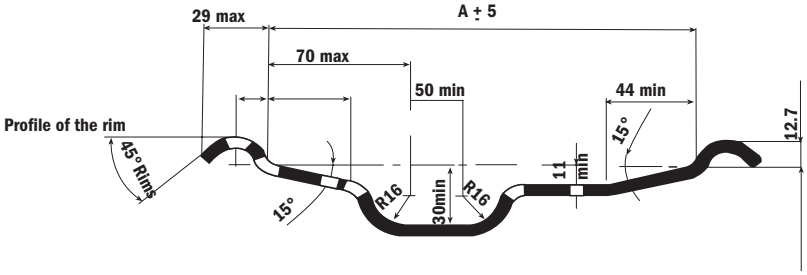

Diameters		
Nominal Diameter	**C1: Mandrel Circumference mm (1)**	**Diameter D mm**
15,5	1226,9	393,7
17,5	1386,5	444,5
19,5	1546	495,3
20,5	1625,8	520,7
22,5	1785,4	571,5
24,5	1945	622,3
26,5	2104,6	673,1
30,5	2423,8	774,7

(1) Mandrel circumference (C1 +- 1.2 mm) for ropes containing 16 mm. balls.

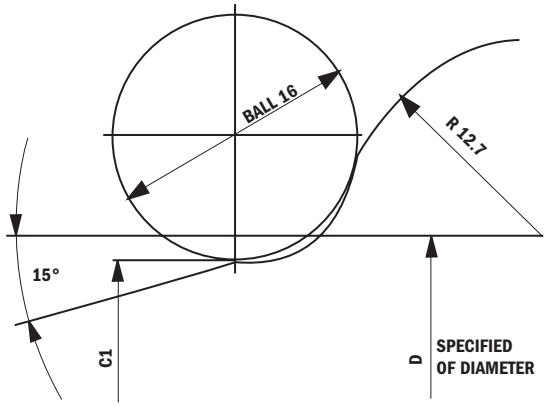

Countour dimension	
Width code	E (mm)
AG11.75	32 min.
AG13.00	32 min.
AG16.00 and larger	36 min.

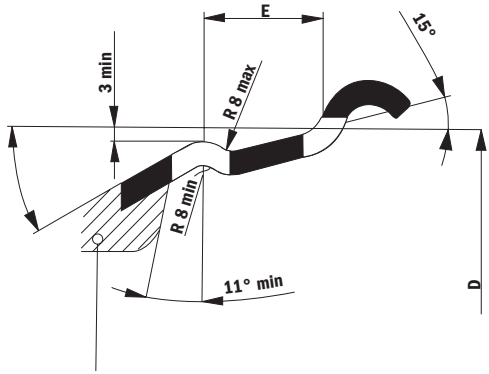

Wheels

Trelleborg manufactures its own wheels and has a wide range of high quality rims.
A wheel consists of rim and disc with varying details like rim flange reinforcement and air valve guards depending on wheel application.

The rim for a TWIN wheel is a one piece design and rolled with a profile to allow mounting of the tire in the best possible way.

1 = Rim
2 = Disc with hubhole+bolthole
3 = Rim flange
4 = Reinforcement
5 = Airvalve hole
6 = Airvalve guard (pipesleeve)
7 = Pipesleeve plug

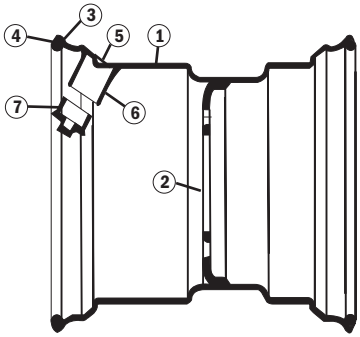

Rim types

There are two existing main types of rim related to tire bead seat angle.
5° - seat angle combined with high rim flange.
15° - seat angle combined with low rim flange.

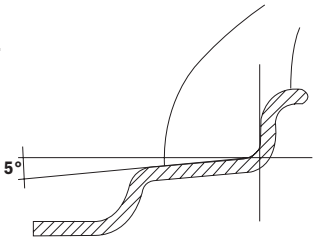

Rim types can be identified by the rim diameter.
15° - rims with diameter ending with 0,5" (17.5", 22.5", 30.5" ....).
5° - rims with remaining diameters (24", 34", 38".....).

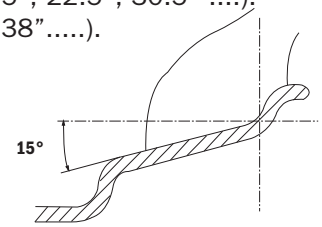

Hump rim

Hump is a raised profile on the tire bead seat, which holds the tire firmely in place on its bead seat, even at low pressure.
Trelleborg 15° rims from diameter 22.5” up to 30.5” are equipped with humps.
1 = Hump
2 = Bead seat
3 = Rim Flange

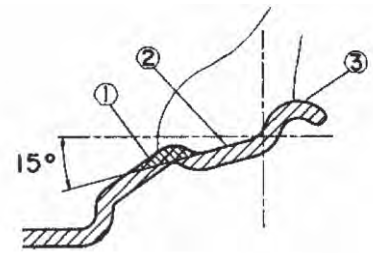

Rim offset

Rim offset states the position for the disc hub contact surface related to the rim centreline.
0 = disc hub contact surface lined with centreline.
+ = disc hub contact surface lined outside centreline.
– = disc hub contact surface lined inside centreline.
An increasing (+) value for the offset gives a decreasing wheeltrack setting value and a decreasing (-) value gives increasing wheeltrack setting.

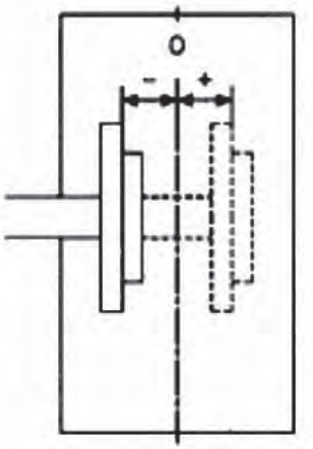

Hole pattern/Marking-Disc

To make it possible to fit a wheel on a hub, the disc must have a hole pattern matched to the wheel bolts
and hub configuration.
A = Centre hole diameter
B = Pitch circle diameter
C = Stud hole
(+ stud hole design + N° of stud holes)
1 = Size designation
2 = Product code
3 = Manufacturer
4 = Date (month and year)

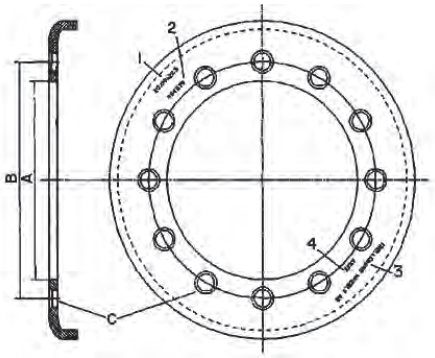

The centre hole diameter has in
some cases tight tolerances.
This when hub centering is used to fix the wheel in right position on the hub.
This concept is combined with plain stud hole design.
The pitch circle diameter always has tight tolerances. This is also the case for the stud hole spacing (distance between the stud holes).
Stud hole designs are available with following alternatives:
1 = plain
2 = conical one sided
3 = conical double sided
4 = spherical one sided
5 = spherical double sided
It is important to clarify correct kind of stud hole design, otherwise there is an high risk of loose wheels and wheel damages.

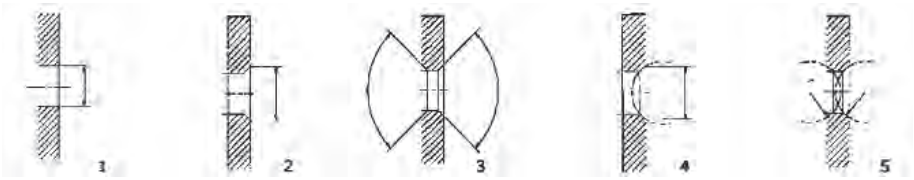

Painting

All TWIN wheel rims are painted with a powder coating, giving a very high finish and durability. The wheels can be delivered in following basic colors: silver, white, red, yellow (construction type) ands yellow (John Deere type) as well as other special colors.

Measuring of Twin wheels

This information is needed for the correct mounting of Twin Wheels:

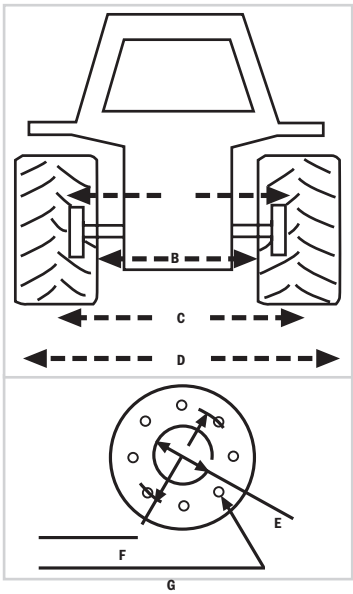

Type of machine _____

Make _____

Model _____ Year _____

Inter axle ratio 4WD _____

	Front mm	Rear mm
Size original tire		
Axle load Kg		
A. Hub flange distance		
B. Sidewall		
Sidewall (outer)		
C. Disc hubside - Sidewall (inner)		
D. Total width		
E. Clearance, Sidewall - Machine		
F. Clearance, Tread - Machine		
G. Centre bore diameter		

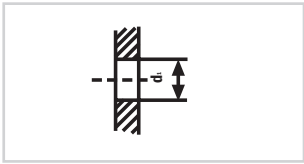

Stud hole design - plain

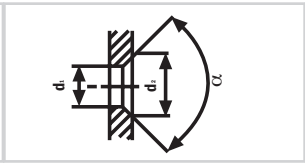

Stud hole design - conical

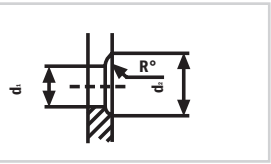

Stud hole design - spherical

Stud hole design	d1 (mm)	d2 (mm)	R°	α
Plain				
Conical				
Spherical				

Valves

C and L Type

Type	ETRTO	TRA	A	Ø VALVE HOLE
C	V2-01-1	TR 13	35	11.5
L	V2-01-2	TR 15	35	16

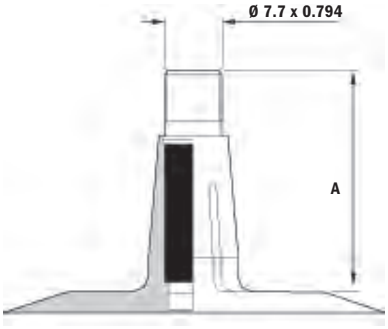

T (Air/Water type valve)

Type	ETRTO	COMPONENTS		TRA	COMPONENTS		A	Ø VALVE HOLE
T	V4-03-1	V4-01-1	V4-02-1	TR218A	SP218A	TR CH3	27	16
T	V4-03-2	V4-01-2	V4-02-1	TR220A	SP220A		35,5	16

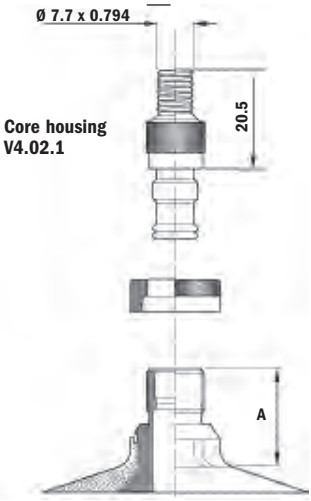

V4-02-1 TRCH3

V4-01-1 SP218A

V4-01-2 SP220A

Z (Screw-on universal valve)

Type	ETRTO	TRA	B
Z	V3-02-8	-	89,5
Z	V3-02-9	TR1177A	99,5
Z	V3-02-15	TR1179A	145,5
Z	V3-02-27	TR1075A	75

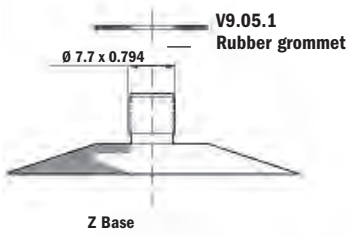

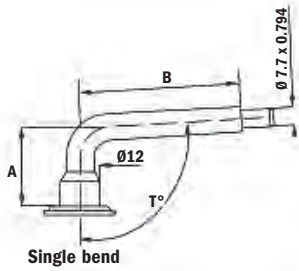

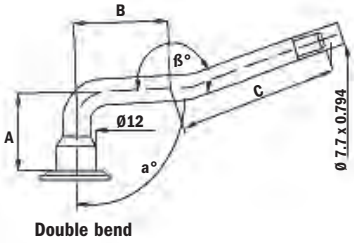

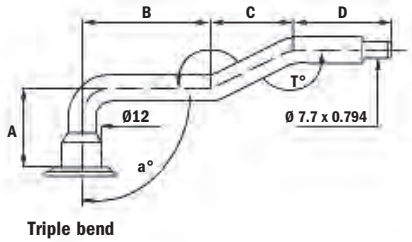

Tubeless (Air/Water)

Type	ETRTO	COMPONENTS		TRA	A
TUBELESS AIR/WATER	V5-15-1	V5-01-1	V4-02-1	TR618A	47,5

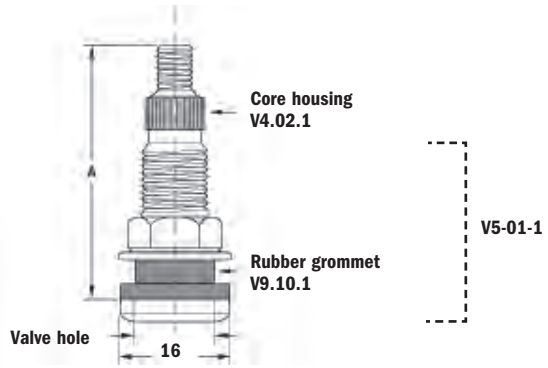

Mechanical lead

In order to fully exploit the advantages of 4 wheel drive and to avoid premature wear of transmission and tires, the peripheral speed of the front axle must be higher than the rear.

The **"MECHANICAL LEAD" (L)** is the percentage relative ratio between the peripheral speeds of the front and rear tires.

Commonly, the correct advancement of the tractor with double traction foresees a value of **L** included between +1 and + 5% (peripheral speed of front tires > peripheral speed rear tires).

Values of **L** out of this range could cause problems of handling instability (**L < 1**, the rear axle "pushes" the tractor in excessive way respect to the frontal axle) or cause excessive creeping between the front and rear tires (**L > 5**, excessive mechanic effort of all the transmission chain).
In both the cases, rises difficulty in the management / insertion of the "gears" and **the tires are subjects to rapid and uneven wears**.

Calculation of the front lead

The measure must be implemented with the following conditions:
- Tractor equipped with standard front ballast
- Nominal tires pressure
- Tract of smooth and level surface at least 50 m.

$$A = \frac{Rc\ (front) * RM - Rc\ (rear)}{Rc\ (rear)} * 100 = (+1\ +5)$$

where:
- Rc (front) = rolling circumference of front axis tires
- Rc (rear) = rolling circumference of rear axis tires
- RM = mechanical ratio between front and rear axle

Measure of the rolling circumference on the field

The measure must be calculated in the following way:

- remove the double traction (the rolling of the front and rear wheels have to be independent)
- mark the front and rear tires sidewall, on the middle of the tire-foot print area
- mark the rolling surface in correspondence of the middle of the tire-foot print area
- move the tractor forward so that the front and rear tire complete exactly 5 revolutions
- mark on the rolling surface the point at the end of the 5th revolution, respectively for the front and rear tires
- measure the distance crossed respectively to the front (f) and rear (r) tires

- **CALCULATION OF Cr (front) =** F[m] / n° of revolutions = **a / 5**
- **CALCULATION OF Cr (rear) =** R[m] / n° of revolutions = **p / 5**

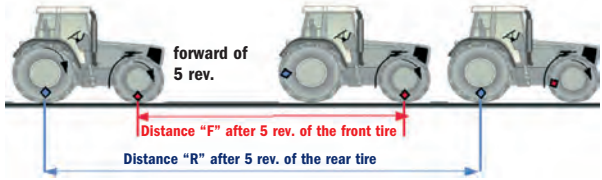

Measure of the mechanical ratio on the field

The measure must be implemented in the following way:

- insert the double traction
- mark the front and rear tires sidewall, on the middle of the tire footprint area
- move the tractor forward so that the rear tire complete exactly 5 revolutions
- count the complete number of revolutions of the front tire
- calculate the fraction of revolution of the front tire in this way: count the number of lugs included between the one in the middle of the foot print area and the previously taken as reference point. Divide this counted number by the total lugs number

CALCULATION OF RM = (front tire revolutions + rev. fraction) / complete rear tire revolutions

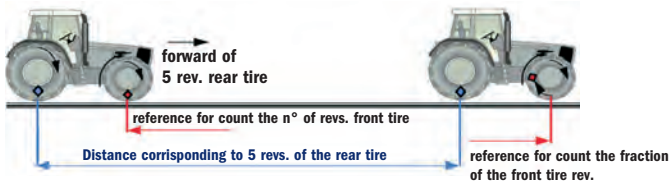

Liquid ballasting

Occasionally the machine needs extra weight to increase tractive power but also to lower the centre of gravity for improved stability. Primary, wheel or chassis mounted weights should be used, but on occasions when this is impossible, the tires can be liquid filled.

Liquid filling alters tire characteristics:
- tires get more rigid and less flexible
- rolling resistance increases
- increased risk of damage to tires, rims and axles
- considerably increased forces during road operations

Liquid recommendations

In areas without any risk of freezing:
- tubed tires - water only
- tubeless tires - water + anti corrosion fluid, usually ethylene glycol

In areas with a risk of freezing:
- tubed tires - water + calcium-chloride ($CaCl_2$) or ethylene glycol or methylated spirit
- tubeless tires - water + ethylene glycol

These solutions lower the freezing point and do not damage the tire, while the calcium chloride also increases the ballasting.

Liquid precautions

- Use pumps with rust resistant pressure gauges.
- Ensure the operator uses protective glasses, overalls, boots and rubber gloves.
- Prepare the solution by pouring the calcium chloride into the water and stirring the mix to help it dissolve.

Never pour the water into the calcium chloride: it is dangerous. Always mix calcium chloride in to water.

- Clean all the metal parts of the vehicle carefully when the filling or drainage operations are complete, as they may have come into contact with the anti-freeze, which is corrosive.
- Check tire pressure frequently as the quantity of air remaining in the tire is low.

Liquid volume

Maximum permitted filling volume is 75% of the total tire volume. For forestry machines, operating in heavy terrain, max. 50% filling volume.

Mixing of anti-freeze fluid

The following proportions may be used as a general guide:

Calcium-chloride ($Ca Cl_2$)

Temperature °C	$Ca Cl_2$ Kg	Water litre	Total weight Kg (per litre mixed fluid)
–10	0,14	0,95	1,09
–20	0,24	0,90	1,14
–30	0,36	0,83	1,19
–40	0,49	0,76	1,25

Example: tire dimension 650/60-38 TWIN 414
Volume at 75% filling level = 590 litre
Wanted anti-freeze temperature -30 °C

* Amount of $Ca Cl_2$	590 x 0,36 = 212 Kg
* Volume of water	590 x 0,83 = 490 Kg
*** Total weight**	**590 x 1,19 = 702 Kg**

Ethylene glycol

Temperature °C	Glycol litre	Glycol Kg	Water litre	Total weight Kg (per litre mixed fluid)
–10	0,23	0,26	0,77	1,03
–20	0,33	0,37	0,67	1,04
–30	0,43	0,48	0,57	1,05
–40	0,53	0,59	0,47	1,06

Example: tire dimension 650/60-38 TWIN 414
Volume at 75% filling level = 590 litre
Wanted to anti-freeze temperature –30 °C

* Amount of glycol	590 x 0,43 = 254 litre
* Volume of water	590 x 0,57 = 336 litre
*** Total weight**	**590 x 1,05 = 620 Kg**

Liquid filling instructions

Liquid filling valves

Agricultural wheels are normally equipped with combined air and liquid-filling valves. For tube tires the valve number is TR218A and TR220A (or ETRTO 4.03.2) and TR618A for tubeless tires (or ETRTO V5.15.1).

Instructions for liquid filling

1. Tires should be mounted as usual with required bead seating pressure.
2. Equip the tractor with the required tools.
3. Inflate the tires to the recommended pressure.
4. Move the tractor until the valve is pointing to desired filling level (at the highest vertical point for 75%).
5. Insert a jack under the axle, near the wheel, and raise it until it makes contact with the axle (the jack will sustain the tractor in the original position when the tire is deflated).
6. Deflate the tire. Unscrew the entyre air valve housing.
7. Connect the liquid filling valve (this is a special valve with an air drain pipe).
8. Introduce the liquid into the tire through a normal rubber hose fixed to the stem of the valve until it flows out of the drainpipe.
9. When the liquid filling valve is not available, introduce liquid in to the tire by fixing a normal rubber hose to the stem of the normal valve. During the filling operation occasionally remove the hose from the valve in order to allow the air in the tire to escape.
10. Stop filling when water starts to come out.
11. Replace the air valve and inflate to the desired pressure (same as point 3).

Note: Only use an inflation pressure gauge that is resistant to anti-freeze liquid. Make sure that the air valve is above liquid level before measuring the air pressure.

Instructions for draining water

1. Jack the wheel up and position the valve at the lowest vertical point.
2. Unscrew the valve housing and let the water drain out.
3. Connect a liquid draining valve to allow all the liquid to come out, then screw the washer down over the stem of the valve.
4. When the liquid draining valve is not available, inflate the tire with air, remove the internal valve stem, using the special cap key, introduce a small rubber (drainage) hose of suitable length and let the remaining water drain from the tire.
5. Remove the rubber tube, replace the internal valve stem and screw the locking washer back down.
6. Inflate the tire with air to the recommended pressure.

Liquid ballasting (Radial)

Size	Rim	Litres of solution or total water (Kg) (at Valve Level= 75%)	Solution (up to -20°c)			Solution (up to -40°c)		
			Quantity $CaCl_2$ (Kg)	Volume of Water (l)	Total Mass (Kg)	Quantity $CaCl_2$ (Kg)	Volume of Water (l)	Total Mass (Kg)
VF 620/70R26	DW20B	391	93	352	445	191	297	488
VF 520/60R28	DW18L	228	54	204	258	111	172	283
VF 600/60R28	DW20B	327	78	293	371	160	248	408
VF 600/65R28	DW21B	347	83	311	394	169	263	432
VF 600/60R30	DW20B	340	81	306	387	166	258	424
IF 600/70R30	DW21B	428	102	384	486	209	324	533
IF 800/65R32 CFO	DW27B	825	198	742	940	404	627	1031
IF 800/70R32 CFO	DW27B	927	222	834	1056	454	704	1158
IF 650/60R34	DW23B	455	109	409	518	223	345	568
IF 650/65R34	DW23B	512	122	460	582	250	389	639
IF 710/60R34	DW25B	575	138	517	655	281	437	718
VF 650/60R38	DW23B	490	117	440	557	239	372	611
IF 650/65R38	DW23B	548	131	493	624	268	416	684
IF 710/60R38	DW25B	607	145	546	691	297	461	758
IF 800/70R38 CFO	DW27B	1035	248	931	1179	507	786	1293
VF 710/60R42	DW25B	654	157	588	745	320	497	817
IF 710/70R42	DW25B	813	195	731	926	398	617	1015
IF 710/75R42	DW25B	904	217	813	1030	443	687	1130
IF 900/60R42	DW30B	1167	279	1049	1328	571	886	1457
VF 380/90R46	DW13A	285	68	256	324	139	216	355
VF 380/105R46	DW13A	352	84	316	400	172	267	439
VF 380/105R50	DW13A	375	90	337	427	183	285	468
IF 710/65R46	DW25B	764	183	687	870	374	580	954
IF 750/75R46	DW25B	1101	264	991	1255	539	837	1376
IF 900/65R46	DW30B	1401	336	1260	1596	686	1064	1750

Size	Rim	Litres of solution or total water (Kg) (at Valve Level= 75%)	Solution (up to -20°c)			Solution (up to -40°c)		
			Quantity $CaCl_2$ (Kg)	Volume of Water (l)	Total Mass (Kg)	Quantity $CaCl_2$ (Kg)	Volume of Water (l)	Total Mass (Kg)
320/65R18	W9	55	13	49	62	26	41	67
340/65R18	W9	64	15	57	72	31	48	79
440/65R24	DW14L	151	41	136	175	74	115	189
480/65R24	DW15L	187	51	169	217	92	142	234
540/65R24	DW16L	247	67	223	287	121	188	309
540/65R26	DW16L	270	65	254	313	132	205	340
440/65R28	DW14L	169	46	152	196	83	129	212
480/65R28	DW15L	206	56	186	239	101	157	258
540/65R28	DW16L	275	74	248	319	135	209	344
600/65R28	DW18L	363	98	326	421	178	276	453
540/65R30	DW16L	289	78	260	335	142	220	361
800/65R32	DW27B	843	202	758	960	413	640	1053
540/65R34	DW16L	317	86	285	368	155	241	396
600/65R34	DW20B	420	100	378	478	205	319	524
540/65R38	DW16L	342	92	308	397	168	260	428
600/65R38	DW18L	446	120	401	517	218	339	557
650/65R38	DW20B	541	146	487	628	265	411	677
600/65R42	DW18L	481	130	433	558	236	366	602
650/65R42	DW20B	582	157	524	675	285	442	727

Size	Rim	Litres of solution or total water (Kg) (at Valve Level= 75%)	Solution (up to -20°c)			Solution (up to -40°c)		
			Quantity $CaCl_2$ (Kg)	Volume of Water (l)	Total Mass (Kg)	Quantity $CaCl_2$ (Kg)	Volume of Water (l)	Total Mass (Kg)
710/60R30	DW23B	519	124	467	591	254	394	648
900/60R32	DW30B	1005	241	904	1145	492	764	1256
650/60R34	DW20B	444	106	399	505	217	337	554
710/60R34	DW23B	566	135	509	644	277	430	707
900/60R38	DW28B	1082	259	973	1232	530	822	1352
900/60R42	DW28B	1159	278	1043	1321	568	881	1449

Size	Rim	Litres of solution or total water (Kg) (at Valve Level= 75%)	Solution (up to -20°c)			Solution (up to -40°c)		
			Quantity $CaCl_2$ (Kg)	Volume of Water (l)	Total Mass (Kg)	Quantity $CaCl_2$ (Kg)	Volume of Water (l)	Total Mass (Kg)
240/70R16	W8	28	6	25	31	13	21	34
260/70R16	W8	33	9	30	38	16	25	41
280/70R16	W9	41	11	37	47	20	31	51
280/70R18	W9	44	12	40	52	22	33	55
280/70R20	W9	48	11	42	53	23	36	59
300/70R20	W9	55	15	50	64	27	42	69
320/70R20	W10	70	19	63	81	34	53	88
360/70R20	W11	93	25	84	108	46	71	116
380/70R20	W12	113	30	102	131	55	86	141
320/70R24	W10	85	23	77	98	42	65	106
360/70R24	W11	100	27	90	116	49	76	125
380/70R24	W12	130	35	117	151	64	99	163
420/70R24	W13	166	44	149	193	81	126	208
480/70R24	W15L	213	58	192	247	104	162	266
480/70R26	W15L	231	71	208	273	113	176	289
320/70R28	W10	94	25	85	110	46	71	118
360/70R28	W11	122	33	110	141	60	93	153
380/70R28	W12	144	38	130	167	71	109	180
420/70R28	W13	185	50	167	215	91	141	231
480/70R28	W15L	225	60	203	261	110	171	281
600/70R28	DW18L	398	95	357	452	194	302	496
420/70R30	W13	196	53	176	228	96	149	245
480/70R30	W15L	256	69	230	296	125	195	320
520/70R30	W16L	320	86	288	371	157	243	400
600/70R30	DW18L	417	99	374	473	204	316	520
480/70R34	W15L	285	77	257	331	140	217	356
520/70R34	W16L	350	95	315	406	172	266	438
600/70R34	DW18L	455	109	409	518	222	345	567
480/70R38	W15L	310	84	279	360	152	236	388
520/70R38	W16L	380	103	342	441	186	289	475
580/70R38	W18L	498	134	448	578	244	378	623
710/70R38	DW23B	760	205	684	882	372	578	950
800/70R38	DW25B	1022	245	919	1164	500	776	1276
580/70R42	W18L	519	140	467	602	254	394	649
620/70R42	DW20B	589	159	530	683	289	448	736
710/70R42	DW23B	800	192	720	912	392	608	1000

Size	Rim	Litres of solution or total water (Kg) (at Valve Level= 75%)	Solution (up to -20°c)			Solution (up to -40°c)		
			Quantity $CaCl_2$ (Kg)	Volume of Water (l)	Total Mass (Kg)	Quantity $CaCl_2$ (Kg)	Volume of Water (l)	Total Mass (Kg)
620/75R26	DW20B	480	115	432	547	235	365	600
650/75R32	DW20B	596	143	536	679	292	453	745
710/75R32	DW23B	762	182	685	867	373	579	952
650/75R38	DW23B	698	167	628	795	342	530	872
710/75R42	DW23B	921	221	829	1068	451	700	1160

Size	Rim	Litres of solution or total water (Kg) (at Valve Level= 75%)	Solution (up to -20°c)			Solution (up to -40°c)		
			Quantity $CaCl_2$ (Kg)	Volume of Water (l)	Total Mass (Kg)	Quantity $CaCl_2$ (Kg)	Volume of Water (l)	Total Mass (Kg)
280/85R20	W10	66	18	60	77	32	50	83
320/85R20	W11	92	25	83	107	45	70	115
280/85R24	W10	75	20	68	87	37	57	94
320/85R24	W11	104	28	94	121	51	79	130
340/85R24	W12	121	33	109	141	59	92	152
380/85R24	W13	160	43	144	186	78	122	200
420/85R24	W15L	211	57	190	245	103	160	264
280/85R28	W10	85	23	76	98	41	64	106
320/85R28	W11	117	31	105	135	57	89	146
340/85R28	W12	136	37	122	157	67	103	170
380/85R28	W13	178	48	160	207	87	135	223
420/85R28	W15L	234	63	211	271	115	178	292
380/85R30	W13	188	51	169	218	92	143	234
420/85R30	W15L	241	65	217	280	118	183	301
460/85R30	W16L	299	81	269	347	147	227	374
380/85R34	W13	205	49	185	238	100	156	258
420/85R34	W15L	265	72	238	307	130	201	331
460/85R34	W16L	327	88	295	380	160	249	409
320/85R38	W11	152	36	137	176	74	116	192
340/85R38	W12	172	46	155	200	84	131	215
380/80R38	W12	197	47	176	223	96	149	245
380/85R38	W13	224	61	202	260	110	171	280
400/75R38	W14	205	49	184	233	100	155	255
420/85R38	W15L	288	78	259	334	141	219	360
460/85R38	W16L	355	96	319	411	174	270	443
520/85R38	W18L	484	131	435	561	237	367	604
650/85R38	DW23B	832	199	749	948	407	632	1039
520/85R42	W18L	523	141	471	607	256	398	654
480/80R42	W16B	389	93	350	451	191	296	490
480/80R46	W16B	416	100	374	483	204	316	524
520/85R46	DW18L	554	133	509	278	117	182	300
480/80R50	DW15B	451	108	406	523	221	344	602

Size	Rim	Litres of solution or total water (Kg) (at Valve Level= 75%)	Solution (up to -20°c)			Solution (up to -40°c)		
			Quantity $CaCl_2$ (Kg)	Volume of Water (l)	Total Mass (Kg)	Quantity $CaCl_2$ (Kg)	Volume of Water (l)	Total Mass (Kg)
230/95R32	W7	69	19	62	80	34	52	86
270/95R32	W8	96	26	86	112	47	73	120
230/95R36	W7	77	21	69	89	38	59	96
270/95R38	W10	118	28	106	134	58	89	147
210/95R44	W7	75	20	68	87	37	57	94
230/95R44	W7	91	25	82	106	45	69	114
270/95R44	W8	125	34	113	145	61	95	156
300/95R46	W10	175	47	158	203	86	133	219
230/95R48	W7	91	25	82	105	45	69	114
270/95R48	W9	140	38	126	162	69	106	175
380/90R50	W12	290	70	261	337	142	221	387
300/95R52	W10	198	47	178	225	97	150	247
380/90R54	W12	310	74	279	360	152	237	413

Size	Rim	Litres of solution or total water (Kg) (at Valve Level= 75%)	Solution (up to -20°c)			Solution (up to -40°c)		
			Quantity $CaCl_2$ (Kg)	Volume of Water (l)	Total Mass (Kg)	Quantity $CaCl_2$ (Kg)	Volume of Water (l)	Total Mass (Kg)
500/60R22.5	AG16.00	203	49	183	235	99	154	256
560/60R22.5	AG16.00	247	67	222	287	121	188	309
580/65R22.5	AG16.00	301	81	271	349	147	229	376
600/50R22.5	AG20.00	240	58	221	278	117	182	300
600/55R26.5	AG20.00	320	77	288	371	157	243	403
680/55R26.5	AG20.00	385	104	347	447	189	293	481
710/50R26.5	AG24.00	380	91	342	433	187	289	476
750/60R30.5	AG24.00	675	162	608	783	331	513	851
650/65R30.5	AG20.00	533	128	480	618	261	405	672
850/50R30.5	AG28.00	702	168	632	814	344	534	885

Size	Rim	Litres of solution or total water (Kg) (at Valve Level= 75%)	Solution (up to -20°c)			Solution (up to -40°c)		
			Quantity $CaCl_2$ (Kg)	Volume of Water (l)	Total Mass (Kg)	Quantity $CaCl_2$ (Kg)	Volume of Water (l)	Total Mass (Kg)
12.4R36	W11	129	30	115	145	63	97	160
13.6R36	W12	176	42	158	200	86	134	220
7.50R20	5.50F	39	9	34	43	19	29	48
8.3R24	W7	39	9	34	43	18	29	47
9.5R20	W8	48	11	43	54	23	36	59
9.5R24	W8	55	13	49	62	26	41	67

Size	Rim	Litres of solution or total water (Kg) (at Valve Level= 75%)	Solution (up to -20°c)			Solution (up to -40°c)		
			Quantity $CaCl_2$ (Kg)	Volume of Water (l)	Total Mass (Kg)	Quantity $CaCl_2$ (Kg)	Volume of Water (l)	Total Mass (Kg)
340/80R18	11	91	21	81	102	44	68	112
400/70R18	13	114	27	102	129	55	86	141
400/70R20	13	122	29	110	139	59	93	152
400/70R24	DW13	139	33	125	158	68	105	173
440/80R24	DW14L	169	40	152	192	82	128	210
460/70R24	DW15L	195	46	175	221	95	148	243
500/70R24	DW16L	241	57	217	274	118	183	301
480/80R26	DW15L	280	67	252	319	137	212	349
440/80R28	DW15L	239	57	214	271	116	181	297

Liquid ballasting (Cross-ply construction)

Size	Rim	Litres of solution or total water (Kg) (at Valve Level= 75%)	Solution (up to -20°c)			Solution (up to -40°c)		
			Quantity $CaCl_2$ (Kg)	Volume of Water (l)	Total Mass (Kg)	Quantity $CaCl_2$ (Kg)	Volume of Water (l)	Total Mass (Kg)
Twin Tractor								
400/55-17.5	AG11.75	85	20	77	99	42	65	106
600/55-26.5	AG20.00	315	76	284	365	154	239	394
500/60-26.5	AG16.00	220	53	198	255	108	167	275
600/55-30.5	AG20.00	345	83	311	400	169	262	431
600/60-30.5	AG20.00	380	91	342	441	186	289	475
750/45-30.5	AG24.00	410	98	369	476	201	312	513
800/55-30.5	AG28.00	740	178	666	858	363	562	925
900/60-32	DW27B	990	238	891	1148	485	752	1238
710/65-38	DW24B	695	167	626	806	341	528	869
850/50-38	DW28B	885	212	797	1027	434	673	1106
850/60-38	DW28B	1050	252	945	1218	515	798	1313
850/55-42	DW28B	955	229	860	1108	468	726	1194
Twin Implement								
280/60-15.5	AG8.00	45	11	41	52	22	34	56
400/45-15.5	AG13.00	57	13	51	64	27	43	70
400/60-15.5	AG13.00	92	22	82	104	45	69	114
420/55-17	13.00	93	22	83	105	45	70	115
400/55-17.5	AG11.75	85	20	77	99	42	65	106
400/55-22.5	AG11.75	110	26	99	128	54	84	138
500/45-22.5	AG16.00	140	34	126	162	69	106	175
500/60-22.5	AG16.00	225	54	203	261	110	171	281
560/45-22.5	AG16.00	180	43	162	209	88	137	225
560/60-22.5	AG16.00	270	65	243	313	132	205	338
600/50-22.5	AG20.00	265	64	239	307	130	201	331
710/40-22.5	AG24.00	305	73	275	354	149	232	381
400/60-26.5	AG13.00	160	38	144	186	78	122	200
500/60-26.5	AG16.00	265	64	239	307	130	201	331
710/45-26.5	AG24.00	370	89	333	429	181	281	463
800/40-26.5	AG28.00	455	109	410	528	223	346	569
600/60-30.5	AG20.00	380	91	342	441	186	289	475
650/65-30.5	AG20.00	516	123	464	587	253	392	645
710/50-30.5	AG24.00	460	110	414	534	225	350	575
750/60-30.5	AG24.00	702	168	631	799	343	533	876
800/45-30.5	AG28.00	540	130	486	616	265	410	675
850/50-30.5	AG28.00	773	185	695	880	378	587	965
Twin AMPT								
620/50B22.5	AG20.00	265	64	239	307	130	201	331
650/45B22.5	AG20.00	245	59	221	284	120	186	306
710/40B22.5	AG24.00	305	73	275	354	149	232	381
620/55B26.5	AG20.00	320	77	288	371	157	243	400
650/55B30.5	AG20.00	380	91	342	441	186	289	475
750/50B30.5	AG24.00	460	110	414	534	225	350	575
850/45B30.5	AG28.00	627	150	564	714	307	476	783
Twin Garden Tractor								
350/60-17.5	AG11.75	69	16	62	78	33	52	85
400/55-17.5	AG11.75	85	20	77	99	42	65	106
400/55-22.5	AG11.75	110	26	99	128	54	84	138
500/45-22.5	AG16.00	140	34	126	162	69	106	175
500/60-22.5	AG16.00	225	54	203	261	110	171	281

Size	Rim	Litres of solution or total water (Kg) (at Valve Level= 75%)	Solution (up to -20°c)			Solution (up to -40°c)		
			Quantity $CaCl_2$ (Kg)	Volume of Water (l)	Total Mass (Kg)	Quantity $CaCl_2$ (Kg)	Volume of Water (l)	Total Mass (Kg)
Twin Garden Tractor								
560/45-22.5	AG16.00	180	43	162	209	88	137	225
560/60-22.5	AG16.00	270	65	243	313	132	205	338
23.1-26	DW20B	495	119	446	574	243	376	619
600/60-30.5	AG20.00	380	91	342	441	186	289	475
Agroforest								
320/85-24	W11	105	25	94	119	51	80	131
380/85-24	W12	155	37	139	176	76	61	137
380/85-28	W12	170	40	153	193	83	129	212
420/85-28	W15L	225	54	202	256	110	171	282
420/85-30	W15L	235	56	211	267	115	178	293
460/85-30	W16L	310	74	279	353	152	235	387
420/85-34	W15L	265	63	238	301	130	201	331
460/85-34	W16L	335	80	301	381	164	254	418
420/85-38	W15L	275	66	247	313	134	209	343
460/85-38	W16L	345	82	310	392	169	262	431
520/85-38	DW16L	470	112	423	535	230	357	587

Liquid ballasting (Forestry)

Size	Rim	Litres of solution or total water (Kg) (at Valve Level= 75%)	Solution (up to -20°c)			Solution (up to -40°c)		
			Quantity $CaCl_2$ (Kg)	Volume of Water (l)	Total Mass (Kg)	Quantity $CaCl_2$ (Kg)	Volume of Water (l)	Total Mass (Kg)
Twin Forestry (*)								
400/60-15.5	AG13.00	61 / 92	14 / 22	55 / 82	69 / 104	30 / 45	46 / 69	76 / 114
500/45-22.5	AG16.00	94 / 140	23 / 34	85 / 126	109 / 162	46 / 69	71 / 106	118 / 175
500/60-22.5	AG16.00	150 / 225	36 / 54	135 / 202	174 / 261	73 / 110	114 / 171	188 / 281
600/50-22.5	AG20.00	160 / 240	38 / 57	144 / 216	182 / 273	78 / 117	121 / 182	199 / 299
650/45-22.5	AG20.00	162 / 244	39 / 58	146 / 219	185 / 277	79 / 119	123 / 185	202 / 304
710/40-22.5	AG24.00	202 / 304	48 / 73	182 / 274	234 / 353	99 / 149	153 / 231	253 / 380
600/50-24.5	AG20.00	160 / 240	38 / 57	144 / 216	182 / 273	78 / 117	121 / 182	199 / 299
710/40-24.5	AG24.00	190 / 285	45 / 68	171 / 256	216 / 324	93 / 139	144 / 216	237 / 355
400/60-26.5	AG13.00	85 / 128	20 / 30	76 / 115	96 / 145	41 / 62	64 / 97	105 / 159
500/60-26.5	AG16.00	147 / 219	35 / 53	132 / 197	171 / 254	72 / 107	112 / 166	184 / 274
600/55-26.5	AG20.00	210 / 315	50 / 76	189 / 283	244 / 365	103 / 154	160 / 239	263 / 394
650/60-26.5	AG20.00	215 / 321	52 / 77	194 / 289	249 / 372	105 / 157	163 / 244	269 / 401
710/45-26.5	AG24.00	245 / 370	59 / 89	221 / 333	284 / 429	120 / 181	186 / 281	306 / 463
750/50-26.5	AG24.00	320 / 475	77 / 114	288 / 427	371 / 551	157 / 233	243 / 361	400 / 594
750/55-26.5	AG24.00	335 / 502	80 / 120	301 / 451	381 / 571	163 / 245	254 / 381	417 / 626
800/40-26.5	AG24.00	231 / 346	55 / 83	207 / 311	262 / 394	113 / 169	175 / 263	288 / 432
780/50-28.5	AG26.00	347 / 521	83 / 124	312 / 468	395 / 592	170 / 255	263 / 395	433 / 650
600/60-30.5	AG20.00	255 / 380	61 / 91	230 / 342	296 / 441	125 / 186	194 / 289	319 / 475
620/55-30.5	AG20.00	235 / 350	56 / 84	212 / 315	273 / 406	115 / 172	179 / 266	294 / 438
710/50-30.5	AG24.00	315 / 470	75 / 113	285 / 425	367 / 548	155 / 232	359 / 241	590 / 396
750/45-30.5	AG24.00	300 / 450	72 / 108	270 / 405	348 / 522	147 / 221	228 / 342	375 / 563
600/65-34	DW20B	304 / 455	73 / 109	274 / 409	353 / 528	149 / 223	231 / 346	380 / 569
710/55-34	DW24B	377 / 565	90 / 136	339 / 508	437 / 655	185 / 277	286 / 429	471 / 706
750/65-34	DW24B	487 / 731	117 / 175	438 / 658	565 / 848	239 / 358	370 / 556	609 / 914

(*): Max 50% filling volume for tire operating in heavy terrain

Tire maintenance

Tires are the only contact between the vehicle and the ground.
It is therefore of paramount importance that tires be maintained in good condition at all times and that, when the time comes to change them, the correct replacements are fitted.
The tires fitted to your vehicle as original equipment were selected by the vehicle and tire manufacturers taking into account all aspects of the vehicle's operation.
Changes in tire size, structure, load and speed rating should not be made without first seeking advice from the tire or vehicle manufacturer, as the effect on safety, vehicle behaviour and clearance must be considered.

Tire fitting and removal

General instructions

- Tire fitting and removal can be dangerous.
  Entrust these operations to specially trained experts only, using proper tools and procedures.
- If not performed by qualified personnel, these operations may cause visible or invisible damage to the tire and rim, which may result in breakage during subsequent use.
- In exceptional cases in which these operations cannot be carried out by an expert, fitting and removal must be performed by carefully following the instructions specially provided.
- Ensure that the tire to be fitted is the correct type and size for the vehicle concerned and the intended use.
- Particular attention must be paid to the compatibility of the rim and tire centring.
- For use of 5° rims on high powered tractors, check that the rims for the drive wheels feature a knurling in the bead seat, which is capable of stopping rotation of the tires on the rim during moments of high traction, thus avoiding the shearing of the valve.
- Avoid painting the bead seats of rims for drive wheels with epoxy resin paints.
  In the case of rims with a special finish, carefully rasp and renew the protection with a normal anti-rust treatment.
- Fit with the same structure, tread pattern and size on the same axle of the vehicle.

  For dual fitting, use only tires of the same size, structure and groove depth and comply with the dual spacing specified for the size used.
- With new tires, any other parts (inner tube, flap, valve sealing ring) must also be new.
- Check used tires both externally and internally for water, moisture, foreign bodies or any sign of rust. If damage is found and assessed to be irreparable, the tire should be scrapped.
- The rim must be clean and in good condition, especially if it has already been used.

- Discard rusty, deformed, damaged or re-welded rims and rim components.
- Be careful not to damage any parts of the tire or tube during fitting and removal.
- Always use the proper specialized equipment and tools and the approved type of lubricant (never use silicone or petroleum-base lubricants).
- Clean the tire bead area and the contact area between the rim and the tire.
- Check that the tire, tube and the flap are perfectly compatible.
- In the case of TUBE TYPE tires, ensure there is no air between the tire and inner tube.
- For correct fitting of tube type tires, it is advisable to lightly powder and partially inflate the tube before placing it inside the tires in order to avoid creasing.
- Ensure that the tire is centred on the rim.

Lubricant procedure

Lubricate the rim bead seat, rim flange and tire bead with an high quality, quick drying, fitting lubricant made for agricultural tires (e.g. Eurometec) or, in case of emergency, soap and water.
The fitting lubricant with these characteristics reduces also the risk of the tire slipping on the rim.
If this advice is not followed, bead damage or fracture could occur during fitting and/or rim slippage during normal operation, which may cause premature tire failure.

Part to Lubricate

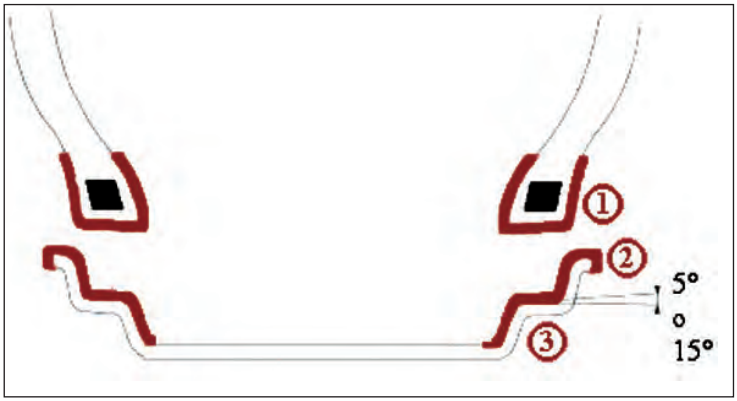

1. Bead
2. Bead Seat
3. Bead Seat well

Fitting procedure

N.B.: Fit and remove tires on DW type rims on the flange nearer the lower well (irrespective of valve position).

• Tubeless
- Fasten the valve core housing in the valve hole.
- Fit the tire on the rim, placing the inner bead over the flange at the top. Be sure the bead is not “hung up”on the bead seat flange. It should move into the rim well.

• Tube type
- Pull the tire towards the outside of the rim as far as possible in order to make room for the tube.
- Before inserting the tube in the tire, ensure that the valve is positioned at the bottom of the wheel. Align the stem with the valve hole and place the tube in the tire, starting at the bottom. Place the valve in the valve hole and screw the rim nut in place. Be sure that the tube is well inside the rim.

• Starting at the top, use the fitting tools to lift the outer bead up and over the rim flange, then down into the rim well.
After positioning the first section of the outer bead in the rim well,place one hand against the section to hold it in place and then use the other hand to pry the remainder of the bead over the flange with the fitting tools.

• Centre the tire on the rim. This is extremely important in order to prevent broken beads and assist the correct positioning the bead on the rim bead seat during inflation.

Inflation pressure procedure

During tire inflation:

- keep a safe distance, always use a safety cage, if possible anchored to the wall and/or the floor, or with retaining chains
- if no cage is available, the fitter must ensure that no part of his body is in the possible trajectory of the valve mechanism or the caps during inflation. (See the shaded area shown in figures 1,2,3)
- do not leave equipment on the sidewall of the tire laid flat
- the use of suitable pressure limitation gauges is recommended
- use a filter and dehumidifier (or drier) on the compressed air line in order to avoid the entry of humidity/dirt

figure 1

figure 2

figure 3

Inflation must be performed in three steps

Step 1

Max inflation pressure
- 1,5 bar for tires with tire diameter 15”or less
- 1,0 bar for all other tires
- For wheels with BLS (tire lock) separate instructions must be followed

Ensure that the beads are correctly positioned on the bead seat. If not, deflate the tire and centre it on the rim.

Step 2

Do not exceed the recommended maximum fitting pressure during inflation. In case of doubt or any difficulty, contact a specialist.
- Inflation up to max bead seating pressure with a safety device (blast cage or distance filling)

5 bar for tires fittes on 15-degree rims

3,5 bar for Radial tractor tires

2,5 bar for All other Agricultural tires fitted on 5-degree rims

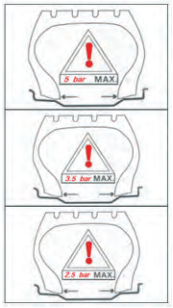

Note:
- It is important to inflate the tire to the max. bead seating pressure. This is to ensure the proper fit of the tire against the rim.
- If the beads are not correctly seated it is necessary to deflate, lubricate and inflate again. Repeat these operations until the beads are correctly seated.

Step 3

- After inflating up to max. bead seating pressure, the pressure must be adjusted to appropriate shipment or service pressure before removal from the safety device.
- Adjustment to service pressure with a safety device (safety cage or distance filling).
- In cases in which service pressure is higher than:
  - 4 bar for a tire with 5 bar - bead seating pressure
  - 3 bar for a tire with 3,5 bar - bead seating pressure
  - 2 bar for tire with 2,5 bar - bead seating pressure

the tire must firstly be inflated to a pressure 20% higher than the service air pressure and then adjusted to service pressure.

Removal procedure

- Deflate the tire by removing the valve core. After deflating, remove the rim nut and push the valve through the valve hole (for tube type tires).
- When the tire is completely deflated, place a hydraulic “bead unseating” tool between the tire bead and rim flange and force the bead off the bead seat.
- Carefully lubricate the tire bead and the rim flange area with an appropriate fitting lubricant.
- Push the outside bead at the bottom of the wheel into the well. Do not use excessive force. Insert tire lever under the bead at the top of the wheel and carefully pry the bead over the rim flange.
- Hold that bead section over the flange with a tire lever and use another to pry the next section over the flange.
- To remove the tire completely from the rim, insert the tire lever under the inside bead at the side of the tire. Carefully pry the rest of the inside bead over the rim flange, ensuring that the bead area at the top of the tire is down in the well of the rim.

Shipment pressure

Complete wheels shipped from the Trelleborg warehouse are usually inflated to the following shipment pressures:
- 1,0 bar for tractor and garden tractor wheels
- 1,5 bar for implement wheels
- 2,0 bar for other wheels

N.B.: These shipment pressures must be adjusted to the correct level according to the Technical Data tables, before use.

Storage

- Keep the tires away from heat and ozone sources.
- Avoid prolonged exposure of the tires to direct sunlight.
- Avoid any contact with grease, petrol, volatile solvents or other substances that may deteriorate the rubber.
- Avoid horizontal storage for tubeless tires (whether radial or cross-ply); only small size tires may be stacked or stored flat (for a maximum of 6 months).

When tires are stored flat, the position must be lug against lug.

- Reduce inflation pressure when tires are stored fitted on rims.
- Turn over stock constantly.
- Ensure there is no water or moisture inside the tire.
- Inner tubes and flaps must never be hung up, but always stored on shelves.

Use and maintenance

- Adapt driving manner and speed to the vehicle load, the environmental conditions and the road surface.
- Avoid overload, either total or localized, with a suitable load distribution. Overload greatly affects the tire's life.
- After tire fitment, check nuts are still tight after 3 hours' use and then subsequently at regular intervals.
- Use a proper gauge (periodically checking its calibration).
- Do not allow the tire to stand on hydrocarbons in general (oil, Diesel oil, grease, etc.).
- The tires on a vehicle should be examined with particular attention being paid to the:
  - tread, for evidence of abnormal wear, cuts, localised deformities and foreign bodies (grit, scrap metal, etc.)
  - sidewalls, for cuts, cracks, impact damage, and localized deformities
  - bread/rim flange region, for signs of chafing, rim damage, misfitment
  - between twin tires, for cracks, abrasion, localized deformities and foreign bodies
- If there are objects lodged between the duals, first of all deflate the two tires.
- In case of any such damage, the tire must be checked by a specialist.
- A tire specialist should be also consulted if a tire has suffered a heavy impact, even though no damage is visible, because damage could seriously curtail tire life.
- Following a puncture, it is imperative to pullup as soon as possible, because working under flated may cause structural deterioration.
- A tire which has been punctured must always be removed from the wheel to be checked for secondary damage.
- If a repair to a tire is necessary and feasible, it must be carried out by a tire specialist as soon as possible in order to avoid further deterioration of the structure.
- In any case, all tire repairs must be entrusted to a tire specialist who must then take full responsibility for them.

Others

- Tires age, even if they have not been used or have only been used occasionally. Cracking of the tread sidewall rubber, sometimes accompanied by carcass deformation, is evidence of ageing. Old and aged tires must be checked by tire specialists to ascertain their suitability for further use.
- Tires fitted to vehicles that are parked for long periods will tend to age a crack more quickly than those that are used and run frequently. In such circumstances it is important to jack the weight off the tires and protect the tire from direct sunlight.

How to calculate the right pressure

Divide the axle load by the number of tires, then divide that figure by the factor:

FACTOR = 0,88 for dual
0,82 for triples

This gives the reference load that can be used in the technical manual to find out inflation pressure or maximum ballast.

Example 1:

Tires: 540/65R38 TM800 147D
Load on rear axle: 6.000 Kg
Load for tire: 6.000 Kg / 2 = 3.000 Kg

- Condition of service: 10 HT
- Pressure: 1,2 bar

- Condition of service: 10 LT
- Pressure: 0,9 bar

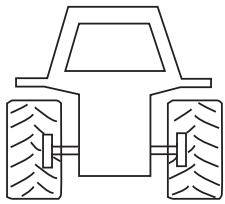

SINGLE

Example 2:

Tires: 540/65R38 TM800 147D
Load on rear axle: 10.000 Kg
Load for tire: 10.000 Kg / 4 = 2.500 Kg
Load to be considered: 2.500 Kg / 0.88 = 2.840 Kg

- Condition of service: 10 HT
- Pressure: 1,1 bar

- Condition of service: 10 LT
- Pressure: 0,8 bar

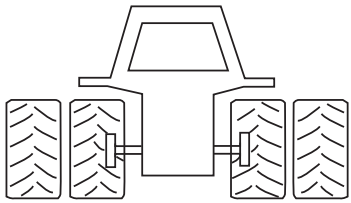

DUAL

Example 3:

Tires:	480/70R38 TM700 145A8
Load on rear axle:	10.000 Kg
Load for tire:	10.000 Kg / 6 = 1.670 Kg
Load to be considered:	1.670 Kg / 0.82 = 2.030 Kg
• Condition of service:	10 HT
• Pressure:	0,6 bar (consider the minimum pressure suggested in HT - 0,8 bar)
• Condition of service:	10 LT
• Pressure:	load not present in the load/pressure table (consider the minimum pressure suggested in LT – 0,6 bar)

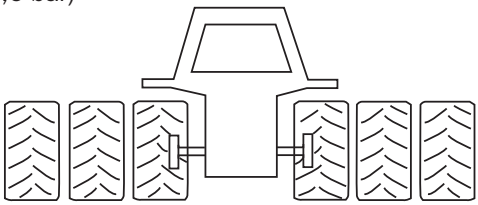

TRIPLES

Note:

- In LT the minimum suggested pressure is 0,6 bar
- In HT the minimum suggested pressure is 0,8 bar

General information about inflation pressure, fitting and handling of forest tires

The inflation pressure affects the service life of the tire and the performance of the machine. To guarantee the tire's function and to provide margins for the extra stress a tire in forest service is exposed to, the inflation pressure should be chosen carefully.

Machine specific inflation pressure recommendations are based on a fully loaded machine, according to the manufacture's stated load, plus a dynamic marginal.

The recommendations indicate minimal- normal- and maximum inflation pressure. For estimation, see headline "The inflation pressure's effects".

The inflation pressure should be adjusted to the terrain conditions and load

Use a lower pressure if the terrain is relatively rock free and where greater bearing capacity is required.
Use a higher pressure for heavy service in demanding terrain.

If a machine specific recommendation is missing, the inflation pressure should be adjusted to the load that the tire is exposed to in kilograms (machine weight + load) and terrain conditions.
For more information, contact Trelleborg.

The inflation pressure's effects

	Advantages	**Disadvantages**
Low inflation pressure	Good comfort Large contact surface Lower ground pressure Less soil damage Increased traction	Reduced stability Increased risk of tube damage/wear
High inflation pressure	Increased stability Requirement when using tracks	Reduced comfort Increased risk of cuts and puncture damage to the lug tread Increased sensitivity to point loads Increased soil damage and ruts Less grip

inflation pressure Check
The tires must be visually checked daily and the inflation pressure must be checked at least once a month.
A tire that has been removed should be checked regularly during the first week after it has been refitted. This is because there might be air pockets between the tire and tube that ventilate out, and reduce the inflation pressure.
Wheels with liquid ballast must be checked more frequently as the volume of air in the tire is smaller.

The inflation pressure becomes lower if the temperature drops. Example: Inflated to 4 bar in the workshop (+20° Celcius) the pressure will become 3,5 bar when outside in the winter (- 20° Celcius). Pressure loss is 13,7% /40 degrees. The opposite will occur when it becomes warmer. (The calculation is valid for constant tire volume.) Ensure adjustments are made for this.

Driving with tracks
Use the recommended inflation pressure for track use.
Check that the tracks are correctly tensioned. The tracks must sag approximately 50 mm between the wheels.
Check that the tracks fit the tires. On one side, there must be a distance of approximately 15 mm between the track's side support and the tire.

Driving with chains
Use of chains does not affect the inflation pressure.

Tire maintenance
Regular inspection and maintenance of the tires increases service life.
During the daily visual inspection of the tires, it is important to note any damage, such as splinters and large gashes or pin hole damage that causes moisture to penetrate the tire shell. Any such damage should be repaired without causing a separation (external rubber releasing from the tire shell).
Check the tension of the anti-slide devices, and make sure that they do not have any loose links or sharp parts that can damage the tires.
Remove any branches or wood splinters that have got trapped between the tire and rim.

Filling forest tires with fluid
The tires can be filled with fluid to increase the stability and pull force of the machine.
Maximum permitted filling volume is 75% of the total tire volume.
For forestry machines, operating in heavy terrain, max. 50% filling volume.

The ballast (fluid) must be water. **At temperatures below zero, a mixture of calcium chloride/water or glycol/water is recommended.**

At a mixture of 35%, calcium chloride increases the mixture's density up to approximately 1.2 kg/litre.

By turning the wheel and pressing the valve needle, you can easily decide whether the tire fluid volume is 75% or 50%.

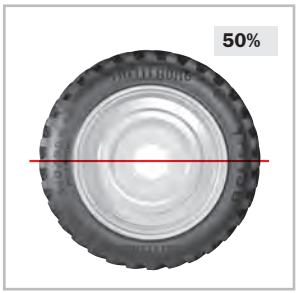

At calculation of the wheel load, the entyre ballast must be added to the machine weight.
Because of the lower air volume, fluid filled tires are less elastic and for that reason are also more sensitive to point loads and impacts. The rolling resistance and the dynamic forces of the wheel and suspension are also increased.
Remember to only use pressure gauges that tolerate fluid mixtures.
To obtain the correct fluid volume, see Trelleborg technical manual at www.trelleborg.com/wheels

Fitting

Lubricant procedure

Lubricate the rim bead seat, rim flange and tire bead with a high quality, quick drying, fitting lubricant made for agricultural tires (e.g. Eurometec) or, in case of an emergency, soap and water.
The fitting lubricant with these characteristics also reduces the risk of the tire slipping on the rim.

If this advice is not followed, bead damage or fracture could occur during fitting and/or rim slippage during normal operation, which may cause premature tire failure.

Inflate the tube after it has been placed into the tire. This to avoid folds on the tube.

Step 1:

Maximum inflation pressure after fitment without any special safety precautions:
1,5 bar for 15” tires and smaller
1,0 bar for other tires

Step 2:

Filling to service pressure with safety equipment or precautions only (blast cage or filling from a distance).

The applied pressure is given on the tire with the symbol below. This pressure should not be mixed up with the maximum inflation pressure that can be higher than the applied pressure.

NOTE: A newly fitted tire should not be exposed to high torques within the first 24 hours.

5 bar for tires fitted on 15 degree rims 22.5” 24.5” 26.5” 28.5” 30.5”

2,5 bar for tires fitted on 5 degree rims.

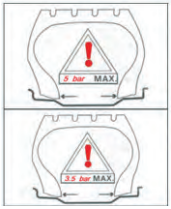

TWIN Forestry
Inflation pressure recommendation

Machine	Pattern			Inflation pressure													
Forwarders																	
				Front						Rear						With track usage	
				Min		Normal		Max		Min		Normal		Max			
Tire size / LI	T480	T440	T428	bar	p.s.i	bar	p.s.i	bar	p.s.i	bar	p.s.i	bar	p.s.i	bar	p.s.i	bar	p.s.i
9 - 10 tons load. Forwarder 8 w. Machine weight 10.500 - 13.000 kg without load																	
600/50-22.5 149A8	Front/Rear		Front/Rear	2,0	30	2,4	35	2,8	40	3,1	46	3,7	54	4,2	61	5,0	73
710/40-22.5 151A8	Front/Rear		Front/Rear	1,9	27	2,2	32	2,5	37	3,0	43	3,5	51	4,0	58	5,0	73
650/45-22.5 150A8		Front/Rear		1,9	27	2,2	32	2,5	37	3,0	43	3,5	51	4,0	58	5,0	73
12 - 13 tons load. Forwarder 6 w. Machine weight 13.000 - 15.000 kg without load																	
600/65-34 157A8		Front		1,9	27	2,2	32	2,5	37	-	-	-	-	-	-	-	-
710/55-34 161A8		Front		1,7	25	2,0	29	2,3	33	-	-	-	-	-	-	-	-
600/55-26.5 165A8	Rear	Rear	Rear	-	-	-	-	-	-	3,1	46	3,7	54	4,3	62	6,0	87
710/45-26.5 163/168A8	Rear	Rear	Rear	-	-	-	-	-	-	3,0	43	3,5	51	4,0	58	6,0	87
12 - 13 tons load. Forwarder 8 w. Machine weight 14.000 - 16.000 kg without load																	
600/55-26.5 165A8	Front/Rear	Front/Rear	Front/Rear	2,2	32	2,6	38	3,0	43	3,1	46	3,7	54	4,3	62	6,0	87
710/45-26.5 163/168A8	Front/Rear	Front/Rear	Front/Rear	2,0	30	2,4	35	2,8	40	3,0	43	3,5	51	4,0	58	6,0	87
14 - 15 tons load. Forwarder 6 w. Machine weight 14.500 - 16.500 kg without load																	
600/65-34 157A8		Front		2,0	30	2,4	35	2,8	40	-	-	-	-	-	-	-	-
710/55-34 161A8		Front		1,9	27	2,2	32	2,5	37	-	-	-	-	-	-	-	-
600/55-26.5 165A8	Rear	Rear	Rear	-	-	-	-	-	-	3,6	52	4,2	61	4,8	70	6,0	87
710/45-26.5 163/168A8	Rear	Rear	Rear	-	-	-	-	-	-	3,4	49	4,0	58	4,6	67	6,0	87
14 - 15 tons load. Forwarder 8 w. Machine weight 15.000 - 17.500 kg without load																	
600/55-26.5 165A8	Front/Rear	Front/Rear	Front/Rear	3,1	44	3,6	52	4,1	60	3,6	52	4,2	61	4,8	70	6,0	87
710/45-26.5 163/168A8	Front/Rear	Front/Rear	Front/Rear	2,9	42	3,4	49	3,9	57	3,4	49	4,0	58	4,6	67	6,0	87
16 tons load. Forwarder 6 w. Machine weight 16.000 - 18.000 kg without load																	
600/65-34 157/163A8		Front		2,0	30	2,4	35	2,8	40	-	-	-	-	-	-	-	-
710/55-34 161/166A8		Front		1,9	27	2,2	32	2,5	37	-	-	-	-	-	-	-	-
710/45-26.5 173A8	Rear			-	-	-	-	-	-	3,8	55	4,5	65	5,2	75	6,0	87
750/50-26.5 174A8			Rear	-	-	-	-	-	-	3,6	52	4,2	61	4,8	70	6,0	87
750/55-26.5 182A8	Rear			-	-	-	-	-	-	3,6	52	4,2	61	4,8	70	6,0	87
710/50-30.5 173A8			Rear	-	-	-	-	-	-	3,7	54	4,4	64	5,1	73	6,0	87
750/45-30.5 173A8			Rear	-	-	-	-	-	-	3,6	52	4,2	61	4,8	70	6,0	87
16 tons load. Forwarder 8 w. Machine weight 18.000 - 20.000 kg without load																	
710/45-26.5 173A8	Front/Rear			3,1	44	3,6	52	4,1	60	3,8	55	4,5	65	5,2	75	6,0	87
750/50-26.5 174A8			Front/Rear	3,0	43	3,5	51	4,0	58	3,6	52	4,2	61	4,8	70	6,0	87
750/50-26.5 182A8	Front/Rear			3,0	43	3,5	51	4,0	58	3,6	52	4,2	61	4,8	70	6,0	87
710/50-30.5 173A8			Front/Rear	3,0	43	3,5	51	4,0	58	3,7	54	4,4	64	5,1	73	6,0	87
750/45-30.5 173A8			Front/Rear	2,8	41	3,3	48	3,8	55	3,6	52	4,2	61	4,8	70	6,0	87
18 - 20 tons load. Forwarder 6 w. Machine weight 17.000 - 21.000 kg without load																	
710/55-34 161/166A8		Front		2,4	35	2,8	41	3,2	47	-	-	-	-	-	-	-	-
750/65-34 169A8				2,4	35	2,8	41	3,2	47	-	-	-	-	-	-	-	-
750/50-26.5 174A8			Rear	-	-	-	-	-	-	3,8	55	4,5	65	5,2	75	6,0	87
750/55-26.5 182A8	Rear			-	-	-	-	-	-	3,8	55	4,5	65	5,2	75	6,0	87
710/50-30.5 173A8			Rear	-	-	-	-	-	-	3,9	57	4,6	67	5,3	77	6,0	87
750/45-30.5 173A7			Rear	-	-	-	-	-	-	3,0	43	3,5	51	4,0	58	6,0	87
780/50-28.5 182A8	Rear			-	-	-	-	-	-	3,8	55	4,5	65	5,2	75	6,0	87
18 - 20 tons load. Forwarder 8 w. Machine weight 20.000 - 24.000 kg without load																	
750/50-26.5 174A8			Front/Rear	3,0	43	3,5	51	4,0	58	3,8	55	4,5	65	5,2	75	6,0	87
750/50-26.5 182A8	Front/Rear			3,0	43	3,5	51	4,0	58	3,8	55	4,5	65	5,2	75	6,0	87
710/50-30.5 173A8			Front/Rear	3,2	47	3,8	55	4,4	63	3,9	57	4,6	67	5,3	77	6,0	87
750/45-30.5 173A8			Front/Rear	3,0	43	3,5	51	4,0	58	3,8	55	4,5	65	5,2	75	6,0	87
780/50-28.5 82A8	Front/Rear			3,8	55	4,5	65	5,2	75	3,8	55	4,5	65	5,2	75	6,0	87

Machine	Pattern			Inflation pressure													
Harvesters																	
				Front						Rear						With track usage	
				Min		Normal		Max		Min		Normal		Max			
Tire size / LI	T480	T440	T428	bar	p.s.i	bar	p.s.i	bar	p.s.i	bar	p.s.i	bar	p.s.i	bar	p.s.i	bar	p.s.i
Smaller 4 w for thinning. Machine weight 8.500 - 10.000 kg																	
600/55-26.5 165A8	Front/Rear	Front/Rear	Front/Rear	2,6	37	3,0	44	3,5	50	2,6	37	3,0	44	3,5	50	-	-
710/45-26.5 163A8	Front/Rear	Front/Rear	Front/Rear	2,4	35	2,8	41	3,2	47	2,4	35	2,8	41	3,2	47	-	-
Smaller 6 w for thinning. Machine weight 15.500 - 16.500 kg																	
600/65-34 157A8		Rear		-	-	-	-	-	-	1,9	27	2,2	32	2,5	37	-	-
710/55-34 161A8		Rear		-	-	-	-	-	-	1,7	25	2,0	29	2,3	33	-	-
600/50-22.5 149A8	Front		Front	2,2	32	2,6	38	3,0	43	-	-	-	-	-	-	5,0	73
650/45-22.5 150A8		Front		2,1	31	2,5	36	2,9	42	-	-	-	-	-	-	5,0	73
710/40-22.5 151A8	Front		Front	2,0	30	2,4	35	2,8	40	-	-	-	-	-	-	5,0	73
600/55-26.5 165A8	Front	Front	Front	2,0	30	2,4	35	2,8	40	-	-	-	-	-	-	5,0	73
710/45-26.5 163A8	Front	Front	Front	1,7	25	2,0	29	2,3	33	-	-	-	-	-	-	5,0	73
Smaller 8 w for thinning. Machine weight 14.500-16.000 kg																	
600/50-22.5 149A8	Front/Rear		Front/Rear	2,2	32	2,6	38	3,0	43	1,9	27	2,2	32	2,5	37	5,0	73
650/45-22.5 150A8		Front/Rear		2,1	31	2,5	36	2,9	42	1,8	26	2,1	30	2,4	35	5,0	73
710/40-22.5 151A8	Front/Rear		Front/Rear	2,0	30	2,4	35	2,8	40	1,7	25	2,0	29	2,3	33	5,0	73
Medium size 4 w. Machine weight 14.500 - 16.500 kg																	
600/65-34 157/163A8		Front/Rear		2,2	32	2,6	38	3,0	43	2,2	32	2,6	38	3,0	43	-	-
710/55-34 161/166A8		Front/Rear		2,0	30	2,4	35	2,8	40	2,0	30	2,4	35	2,8	40	-	-
Medium size 6 w. Machine weight 17.000 - 19.500 kg																	
600/65-34 157/163A8		Rear		-	-	-	-	-	-	2,2	32	2,6	38	3,0	43	-	-
710/55-34 161/166A8		Rear		-	-	-	-	-	-	2,0	30	2,4	35	2,8	40	-	-
600/55-26.5 165A8	Front	Front	Front	2,6	37	3,0	44	3,5	50	-	-	-	-	-	-	6,0	87
710/45-26.5 163A8	Front	Front	Front	2,4	35	2,8	41	3,2	47	-	-	-	-	-	-	6,0	87
Medium size 8 w. Machine weight 18.000 - 19.500 kg																	
600/55-26.5 165A8	Front/Rear	Front/Rear	Front/Rear	2,6	37	3,0	44	3,5	50	2,2	32	2,6	38	3,0	43	6,0	87
710/45-26.5 163A8	Front/Rear	Front/Rear	Front/Rear	2,4	35	2,8	41	3,2	47	2,0	30	2,4	35	2,8	40	6,0	87
Large 6 w for final felling. Machine weight 21.000 - 25.500 kg																	
710/55-34 161/166A8		Rear		-	-	-	-	-	-	2,1	31	2,5	36	2,9	42	-	-
750/65-34 169A8				-	-	-	-	-	-	2,0	30	2,4	35	2,8	40	-	-
600/55-26.5 165A8	Front	Front	Front	3,6	52	4,2	61	4,8	70	-	-	-	-	-	-	6,0	87
710/45-26.5 168A8	Front	Front	Front	3,4	49	4,0	58	4,6	67	-	-	-	-	-	-	6,0	87
710/50-30.5 173A8			Front	2,7	39	3,2	46	3,7	53	-	-	-	-	-	-	6,0	87
750/50-26.5 174A8			Front	2,6	37	3,0	44	3,5	50	-	-	-	-	-	-	6,0	87
750/55-26.5 182A8	Front			2,6	37	3,0	44	3,5	50	-	-	-	-	-	-	6,0	87
750/45-30.5 173A8			Front	2,7	39	3,2	46	3,7	53	-	-	-	-	-	-	6,0	87
Large 8 w for final felling. Machine weight 21.000 - 25.500 kg																	
710/50-30.5 173A8			Front/Rear	3,0	43	3,5	51	4,0	58	3,0	43	3,5	51	4,0	58	6,0	87
750/50-26.5 174A8			Front/Rear	2,9	42	3,4	49	3,9	57	2,9	42	3,4	49	3,9	57	6,0	87
750/50-26.5 182A8	Front/Rear			2,9	42	3,4	49	3,9	57	2,9	42	3,4	49	3,9	57	6,0	87
750/45-30.5 173A8			Front/Rear	2,9	42	3,4	49	3,9	57	2,9	42	3,4	49	3,9	57	6,0	87

Wheels and rims for light service tires

The Trelleborg range of wheels and rims, is available from 3” to 16” in size and can be supplied in many different configurations depending on application, requirements for load capacity and several other values influencing the design.
The wheels and rims are designed with different specifications – ie. sizes, integral hubs, bearings, bores, offsets, plate thickness, paint finish etc. that match the performance requirements defined.

Rims and wheels available

The table contains the product range available in term of dimensions, widths and configurations.
The columns welded/divided indicate whether the specific size of rim/wheel is available as welded version and/or as assembled version.
While the columns hub/bore indicate if the size (dimension/width) is available as wheel (hub) and/or rim (bore).

Rim/Wheel width	Dimension	Welded	Divided	Hub	Bore
1.50-3D	3 Inches		●	●	
2.10AX4	4 Inches	●		●	
2.10-4D	4 Inches		●	●	
2.50-4D	4 Inches		●	●	
2.75AX4	4 Inches	●		●	
6.35-4D	4 Inches		●	●	
3.00AX5	5 Inches	●		●	
2.50AX6	6 Inches	●		●	
2.50AX6	6 Inches	●			●
2.50-6D	6 Inches		●		●
3.25-6D	6 Inches		●		●
3.50AX6	6 Inches	●		●	
3.50AX6	6 Inches	●			●
3.50-6D	6 Inches		●		●
4.00AX6	6 Inches	●		●	
4.50AX6	6 Inches	●		●	
4.50AX6	6 Inches	●			●
4.50-6D	6 Inches		●	●	
4.50-6D	6 Inches		●		●
7.00AX6	6 Inches	●		●	
1.40-8D	8 Inches		●		●
2.125-8D	8 Inches		●	●	
2.125-8D	8 Inches		●		●
2.50AX8	8 Inches	●		●	
2.50AX8	8 Inches	●			●
2.50C-8D	8 Inches	●	●		●
3.00DX8	8 Inches	●		●	
3.00DX8	8 Inches	●			●
3.00D-8D	8 Inches		●	●	
3.00D-8D	8 Inches		●		●
3.75I-8D	8 Inches		●		●
4.25I-8D	8 Inches		●		●
4.33R-8D	8 Inches		●		●
4.375X8	8 Inches	●		●	
4.375X8	8 Inches	●			●
5.375-8D	8 Inches		●	●	

Rim/Wheel width	Dimension	Welded	Divided	Hub	Bore
5.375IX8	8 Inches	●		●	
5.375IX8	8 Inches	●			●
5.50-8D	8 Inches		●		●
5.50AX8	8 Inches	●		●	
5.50AX8	8 Inches	●			●
7.00IX8	8 Inches	●		●	
7.00IX8	8 Inches	●			●
7.00-8D	8 Inches		●		●
8.50AX8	8 Inches	●			●
4.00EX9	9 Inches	●		●	
4.00EX9	9 Inches	●			●
4.00-9D	9 Inches		●	●	
4.00-9D	9 Inches		●		●
6.00E-9D	9 Inches		●		●
3.00BX10	10 Inches	●			●
3.50IX10	10 Inches	●		●	
3.50IX10	10 Inches	●			●
5.00F-10	10 Inches		●	●	
5.00F-10	10 Inches		●		●
5.50F-10	10 Inches		●		●
5.50F-10	10 Inches		●	●	
6.00IX10	10 Inches	●		●	
6.00IX10	10 Inches	●			●
6.00-10	10 Inches		●		●
7.00IX10	10 Inches	●			●
8.25IX10	10 Inches	●			●
8.50IX10	10 Inches	●			●
3.00IX12	12 Inches	●		●	
3.00IX12	12 Inches	●			●
4.00IX12	12 Inches	●		●	
4.00IX12	12 Inches	●			●
4.25IX12	12 Inches	●		●	
4.25IX12	12 Inches	●			●
5.00S-12	12 Inches		●		●
7.00IX12	12 Inches	●		●	
7.00IX12	12 Inches	●			●
9.00IX12	12 Inches	●		●	
9.00IX12	12 Inches	●			●
8.50IX12	12 Inches	●			●
10.50IX12	12 Inches	●			●
4.50IX13	13 Inches	●		●	
5.50EX14	14 Inches	●		●	
5.50EX14	14 Inches	●			●
6.00JX14	14 Inches	●			●
6.75X14.5	14.5 Inches	●		●	
6.75X14.5	14.5 Inches	●			●
3.00JX15	15 Inches	●			●
4.00JX15	15 Inches	●		●	
4.00JX15	15 Inches	●			●
4.50JX15	15 Inches	●		●	
4.50JX15	15 Inches	●			●
5.00JX15	15 Inches	●			●
5.50JX15	15 Inches	●		●	
6.00JX15	15 Inches	●			●
9.00X15	15 Inches	●		●	
10.00LBX15	15 Inches	●			●
13.00LBX15	15 Inches	●			●
4.00EX16	16 Inches	●			●
5.50EX16	16 Inches	●			●
9.00EX16	16 Inches	●		●	

Technical information about rims and wheels

Size

The first figure specified for a rim or wheel indicates its width in inches. The last figure indicates its diameter in inches. The letter after the first figure indicates the contour of the rim or wheel.

The symbol after the letter indicates whether it has been assembled or welded.

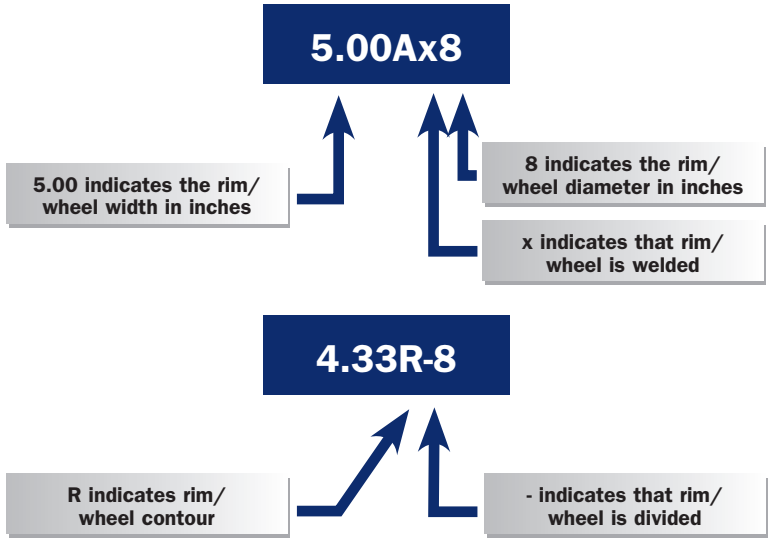

The difference between a rim and a wheel

Rim

A rim consists of two drop-centred disc or two flat-based disc with a bore, welded or assembled. The rim is fitted onto a hub and therefore it is vital that the diameter of the pitch circle of the stud holes is the same on the rim as on the hub. The standard stud holes are pressed with a conical stud seat of 60°, 80° and 90° both for welded and assembled rims.
A wide range of bores are available so that rims can be supplied with a bore to meet your specific demands.

Wheel

A wheel consists of two drop-centred disc welded together or two flat-based disc assembled, and an integral hub.
A wide range of integral hubs is available making it possible also to place the hub in an offset position.

Offset

The offset is measured from the centre of the rim/wheel to the hub side of the inner plate.
The offset can be positive (+) or negative (-).
Two more conditions must be fulfilled before we are able to make an offset. It is necessary that the dimension and the disc contour are the same on both disc.

Therefore wheels can be designed specifically for the functions required by your construction.

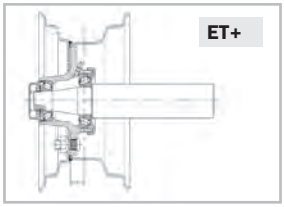

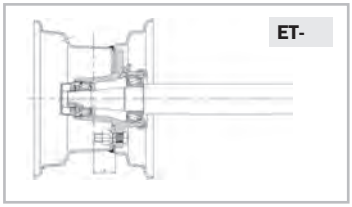

The paint finish

Trelleborg uses a fully automated phosphating and powder painting facility which gives the products a perfect finish and allows the choice of more than fifty different RAL colours. Furthermore, there is the possibility to choose your own colour outside this range when ordering a large number of units.

Integrated hub types

The integrated hubs are designed to match the axle specifications and the required load capacities. The hubs can be designed with a number of different bearings, lubrication nipples, stub axles, seals, caps, axles and other features or have a more plain design.

Examples of integrated hubs types available

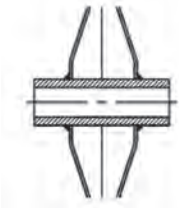

Type of hub: hub PL

Bearing: none/with key-way

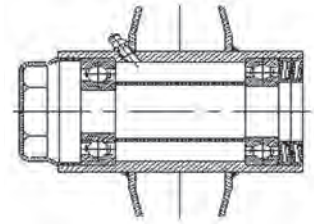

Type of hub: hub EK

Bearing: ball bearing

Hub types and axle

Trelleborg also produces a wide range of hubs and stub axles (up to a length of 600 mm). The hubs are designed with a flange of different size and bores matching the rim specifications.

Furthermore the hubs can be designed with a number of different bearings, lubrication nipples, seals, caps, axles and other features.

Examples of hubs available

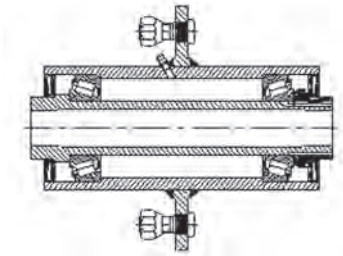

Type of hub: hub GC

Hub for fork mounting.
Possible to get different sizes.

Bearing: ball bearings or tapered roller bearings

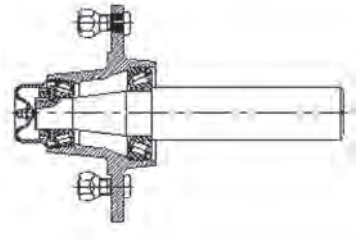

Type of hub: cast hub EC

Possible to get different sizes with suitable axles.

Bearing: ball bearings or tapered roller bearings

The axles produced are designed to match the hub of the wheel and the construction on which the axles are mounted.

Example of axles available

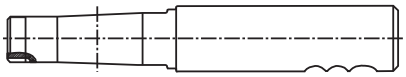

Trelleborg is available for information about design of wheels, rims, hubs and axles to match the requirements of your construction.

Rims for agriculture, forestry and excavator tires

All Trelleborg rims are produced with high quality, strong steel, specially designed for roll-forming. High strength steel is used in different grades, for the discs, depending on the size and service required for the complete wheel.

Rim

The rim is roll-formed in one piece and calibrated into the exact circumference and width. Trelleborg is able to roll-form rims for large diameters and wide widths in one piece. The rim thickness is between 4-8mm. All rims are rigorously controlled during the production process and all welding is 100% checked, to avoid air-leakage when using tube-less tires.

Disc

Discs are cut out of steel in the right size and then pressed into the correct shape, specified by the drawings. The disc thickness can be between 9 and 18 millimeters, dependent on the required load and diameter. The hole-pattern is customer specific. All discs are fully welded into the rim at the correct offset for the specification.

Offset

Offset is the necessary distance between the centre of the rim and the contact surface on the wheel-axle. If the surface is on the machine side of the centre it is called a negative offset. If the surface is on the valve side of the centre it is a positive offset. Note that the offset controls the track gauge.

Reinforcements

Sometimes the expected service demands a stronger than standard-rim. Therefore Trelleborg offers 3 main versions of reinforcements, to make the rim stronger:
R1 -> round bar reinforcement
R2 -> box reinforcement. Unique to Trelleborg and strongest in the market
R3 -> flat bar reinforcement

Painting

Trelleborg Savsjo uses a fully automated powder painting facility which gives the products a perfect finish and allows the choice of individual colours for the market. Today Trelleborg offers more than 50 colours. All colours are water-based and have no content of hazardous ingredients. A Trelleborg rim is 100% recyclable.

Wheels for agricultural tires

	SIZE	BEAD ANGLE	RIM THICK.	DISC THICK.	HUMP/ KNUR	REINF	VALVE GUARD
15.5"							
	AG8.00x15.5	15°	5	9	nd	nd	V1
	AG13.00x15.5*	15°	5	9	nd	nd	V1
17"							
	AG13.00x17*	5°	5	10	nd	nd	V1
	AG16.00x17*	5°	6	10	nd	nd	V1
17.5"							
	AG11.75x17.5	15°	5	10	nd	nd	V1
22.5"							
	AG11.75x22.5	15°	5	12	Hump	R1	V1
	AG13.00x22.5	15°	7	12	Hump	nd	V1
	AG13.00x22.5	15°	7	15	Hump	nd	V1
	AG16.00x22.5	15°	6	12	Hump	R1	V1, V3
	AG16.00x22.5	15°	6	15	Hump	R1	V1, V3
	AG16.00x22.5	15°	7	12	Hump	nd	V1, V3
	AG16.00x22.5	15°	7	15	Hump	nd	V1, V3
	AG20.00x22.5	15°	6	12	Hump	R1	V1, V3
	AG20.00x22.5	15°	7	15	Hump	nd	V1, V3
	AG20.00x22.5	15°	6	15	Hump	R1	V1, V3
	AG20.00x22.5	15°	7	12	Hump	nd	V1, V3
	AG20.00x22.5	15°	7	15	Hump	nd	V1, V3
	AG24.00x22.5	15°	6	12	Hump	R1	V1, V3
	AG24.00x22.5	15°	6	15	Hump	R1	V1, V3
	AG24.00x22.5	15°	7	12	Hump	nd	V1, V3
	AG24.00x22.5	15°	7	15	Hump	nd	V1, V3
24"							
	W10x24	5°	6	12	Knurling	nd	V1
	W12x24	5°	5	12	nd	nd	V1
	DW13Lx24	5°	6	12	Knurling	nd	V1
	DW14Lx24	5°	6	12	Knurling	nd	V1
	DW15Lx24	5°	6	12	Knurling	nd	V1
	DW16LX24	5°	6	12	Knurling	nd	V1
26"							
	DW20Bx26	5°	5	12	nd		V1
	DW20Bx26	5°	5	15	nd		V1
	DW20Bx26	5°	7	15	Knurling	R1	V1, V3
	DW25Bx26	5°	7	15	Knurling	R1	V1
26.5"							
	AG13.00x26.5	15°	6	12	Hump	R1, R2	V1, V3
	AG13.00x26.5	15°	6	15	Hump	R1, R2	V1, V3
	AG16.00x26.5	15°	6	12	Hump	R1, R2	V1, V3
	AG16.00x26.5	15°	6	15	Hump	R1, R2	V1, V3
	AG20.00x26.5	15°	6	12	Hump	R1, R2	V1, V3
	AG20.00x26.5	15°	6	15	Hump	R1, R2	V1, V3
	AG20.00x26.5	15°	7	12	Hump	nd	V1
	AG20.00x26.5	15°	7	15	Hump	nd	V1
	AG24.00x26.5	15°	6	12	Hump	R1, R2	V1, V3
	AG24.00x26.5	15°	6	15	Hump	R1, R2	V1, V3
	AG24.00x26.5	15°	7	12	Hump	nd	V1, V3
	AG24.00x26.5	15°	7	15	Hump	nd	V1, V3
	AG28.00x26.5	15°	6	12	Hump	R1, R2	V1, V3
	AG28.00x26.5	15°	6	15	Hump	R1, R2	V1, V3

* Max Speed 40 Km/h.

Max Speed 65 Km/h na = not available

	SIZE	BEAD ANGLE	RIM THICK.	DISC THICK.	HUMP/ KNUR	REINF	VALVE GUARD
28”							
	W10x28	5°	5	13	nd	nd	V1
	W12x28	5°	5	13	nd	nd	V1, V3
	DW14Lx28	5°	6	13	Knurling	nd	V1
	DW15Lx28	5°	6	13	Knurling	nd	V1, V3
	DW16Lx28	5°	6	13	Knurling	nd	V1
	DW18Lx28	5°	6	13	Knurling	nd	V1
	DW20Bx28	5°	6	13	Knurling	nd	V1
30”							
	DW14Lx30	5°	6	13	nd	R1	V1
	DW14Lx30	5°	6	15	nd	R1	V1
	DW16Lx30	5°	6	13	Knurling	R1	V1, V3
	DW16Lx30	5°	6	15	Knurling	R1	V1, V3
	DW18Lx30	5°	6	13	Knurling	R1	V1
	DW18Lx30	5°	6	15	Knurling	R1	V1
	DW20Bx30	5°	6	13	Knurling	R1	V1, V3
	DW20Bx30	5°	6	15	Knurling	R1	V1, V3
	DW21Bx30	5°	7	13	Knurling	R1	V1
	DW21Bx30	5°	7	15	Knurling	R1	V1
	DW23Bx30	5°	7	13	Knurling	R1	V1
	DW23Bx30	5°	7	15	Knurling	R1	V1
30.5”							
	AG20.00x30.5	15°	6	13	Hump	R1, R2	V1, V2, V3
	AG20.00x30.5	15°	6	15	Hump	R1, R2	V1, V2, V3
	AG20.00x30.5	15°	7	13	Hump	nd	V1, V2
	AG20.00x30.5	15°	7	15	Hump	nd	V1, V2
	AG24.00x30.5	15°	6	13	Hump	R1, R2	V1, V2, V3
	AG24.00x30.5	15°	6	15	Hump	R1, R2	V1, V2, V3
	AG24.00x30.5	15°	7	13	Hump	nd	V1, V2
	AG24.00x30.5	15°	7	15	Hump	nd	V1, V2
	AG28.00x30.5	15°	7	13	Hump	R2	V1, V2
	AG28.00x30.5	15°	7	15	Hump	R2	V1, V2
32”							
	DW20Bx32	5°	7	15	Knurling	R2	V1, V2, V3
	DW20Bx32	5°	7	18	Knurling	R2	V1, V2, V3
	DW23Bx32	5°	7	15	Knurling	R2	V1, V2, V3
	DW23Bx32	5°	7	18	Knurling	R2	V1, V2, V3
	DW27Bx32	5°	7	15	Knurling	R2	V1, V2, V3
	DW27Bx32	5°	7	18	Knurling	R2	V1, V2, V3
	DW30Bx32	5°	7	15	Knurling	R2	V1, V2, V3
	DW30Bx32	5°	7	18	Knurling	R2	V1, V2, V3
34”							
	DW15Lx34	5°	6	15	Knurling	R1, R2	V1, V2,V3
	DW16Lx34	5°	6	15	Knurling	R1, R2	V1, V2, V3
	DW18Lx34	5°	6	15	Knurling	R1, R2	V1, V2,V3
	DW20Bx34	5°	6	15	Knurling	R1, R2	V1, V2, V3
	DW23Bx34	5°	7	15	Knurling	R1, R2	V1, V2
	DW24Bx34	5°	6	15	Knurling	R1, R2	V1, V2, V3

Max Speed 65 Km/h na = not available

	SIZE	BEAD ANGLE	RIM THICK.	DISC THICK.	HUMP/ KNUR	REINF	VALVE GUARD
38"							
	DW12Lx38	5°	7	15	Knurling	nd	V1, V2
	DW12Lx38	5°	7	18	Knurling	nd	V1, V2
	DW15Lx38	5°	7	15	Knurling	R1	V1, V2
	DW15Lx38	5°	7	18	Knurling	R1	V1, V2
	DW16Lx38	5°	7	15	Knurling	R1	V1, V2
	DW16Lx38	5°	7	18	Knurling	R1	V1, V2
	DW18Lx38	5°	7	15	Knurling	R1	V1, V2
	DW18Lx38	5°	7	18	Knurling	R1	V1, V2
	DW20Bx38	5°	7	15	Knurling	R1	V1, V2
	DW20Bx38	5°	7	18	Knurling	R1	V1, V2
	DW23Bx38	5°	7	15	Knurling	R1	V1, V2
	DW23Bx38	5°	7	18	Knurling	R1	V1, V2
	DW25Bx38	5°	7	15	Knurling	R1	V1, V2
	DW25Bx38	5°	7	18	Knurling	R1	V1, V2
	DW27Bx38	5°	7	15	Knurling	R1	V1, V2
	DW27Bx38	5°	7	18	Knurling	R1	V1, V2
	DW28Bx38	5°	7	15	Knurling	R1	V1, V2
	DW28Bx38	5°	7	18	Knurling	R1	V1, V2
	DW30Bx38	5°	7,3	15	Knurling	R1	V1, V2
	DW30Bx38	5°	7,3	18	Knurling	R1	V1, V2
42"							
	DW16Lx42	5°	7	15	Knurling	nd	V1, V2
	DW18Lx42	5°	7	15	Knurling	nd	V1, V2
	DW20Bx42	5°	7	15	Knurling	R1	V1, V2
	DW23Bx42	5°	7	15	Knurling	R1	V1, V2
	DW23Bx42	5°	7	18	Knurling	R1	V1, V2
	DW25Bx42	5°	7,3	15	Knurling	R1	V1, V2
	DW25Bx42	5°	7,3	18	Knurling	R1	V1, V2
	DW28Bx42	5°	7	15	Knurling	R1	V1, V2
	DW28Bx42	5°	7	18	Knurling	R1	V1, V2
	DW30Bx42	5°	7,3	15	Knurling	R1	V1, V2
	DW30Bx42	5°	7,3	18	Knurling	R1	V1, V2
46"							
	DW16Lx46	5°	6	15	Knurling	R1	V1, V2
	DW16Lx46	5°	6	15+18*	Knurling	R1	V1, V2
	DW18Lx46	5°	7	15	Knurling	R1	V1, V2
	DW25Bx46	5°	7,3	15	Knurling	R1	V1, V2
	DW25Bx46	5°	7,3	18	Knurling	R1	V1, V2
50"							
	DW16Lx50	5°	6	15+18	Knurling	R1	V1, V2

Max Speed 65 Km/h na = not available

	SIZE	BEAD ANGLE	RIM THICK.	DISC THICK.	HUMP/ KNUR	REINF	VALVE GUARD
NEW	30" - THK						
	DW21Bx30 THK	5°	6	13	Knurling AK	R1	V1
	DW21Bx30 THK	5°	6	15	Knurling AK	R1	V1
	DW21Bx30 THK	5°	7	15	Knurling AK	R1	V1
NEW	34" - THK						
	DW23Bx34 THK	5°	7	13	Knurling AK	R1	V1
	DW25Bx34 THK	5°	7	15	Knurling AK	R1	V1
NEW	38" - THK						
	DW23Bx38 THK	5°	7	15	Knurling AK	R1	V1
	DW23Bx38 THK	5°	7	18	Knurling AK	R1	V1
	DW25Bx38 THK	5°	7	15	Knurling AK	R1	V1
	DW25Bx38 THK	5°	7	18	Knurling AK	R1	V1
	DW28Bx38 THK	5°	7	15	Knurling AK	R1	V1
	DW28Bx38 THK	5°	7	18	Knurling AK	R1	V1
	DW30Bx38 THK	5°	7	15	Knurling AK	R1	V1, V2
	DW30Bx38 THK	5°	7	18	Knurling AK	R1	V1, V2
	DW30Bx38 THK	5°	7,3	15	Knurling AK	R1	V1, V2
	DW30Bx38 THK	5°	7,3	18	Knurling AK	R1	V1, V2
NEW	42" - THK						
	DW23Bx42 THK	5°	7	15	Knurling AK	R1	V1,V2
	DW23Bx42 THK	5°	7	18	Knurling AK	R1	V1,V2
	DW25Bx42 THK	5°	7,3	15	Knurling AK	R1	V1,V2
	DW25Bx42 THK	5°	7,3	18	Knurling AK	R1	V1,V2
	DW28Bx42 THK	5°	7	15	Knurling AK	R1	V1,V2
	DW28Bx42 THK	5°	7	18	Knurling AK	R1	V1,V2
	DW30Bx42 THK	5°	7	15	Knurling AK	R1	V1,V2
	DW30Bx42 THK	5°	7	18	Knurling AK	R1	V1,V2
	DW30Bx42 THK	5°	7,3	15	Knurling AK	R1	V1,V2
	DW30Bx42 THK	5°	7,3	18	Knurling AK	R1	V1,V2
NEW	46" - THK						
	DW23Bx46 THK	5°	7,3	15	Knurling AK	R1	V1
	DW23Bx46 THK	5°	7,3	18	Knurling AK	R1	V1
	DW25Bx46 THK	5°	7,3	15	Knurling AK	R1	V1, V2
	DW25Bx46 THK	5°	7,3	18	Knurling AK	R1	V1, V2
	DW30Bx46 THK	5°	7,3	18	Knurling AK	R1	V1, V2

* Adjustable offset

Wheels for forestry tires

	SIZE	BEAD ANGLE	RIM THICK.	DISC THICK.	HUMP/ KNUR	REINF	VALVE GUARD
22.5"							
	AG16.00x22.5	15°	6	12	Hump	R1	V3
	AG16.00x22.5	15°	6	15	Hump	R1	V3
	AG20.00x22.5	15°	6	12	Hump	R1	V3
	AG20.00x22.5	15°	6	15	Hump	R1	V3
	AG20.00x22.5UHL	15°	6	12	Knurling	R1	V3
	AG20.00x22.5UHL	15°	6	15	Knurling	R1	V3
	AG24.00x22.5	15°	6	12	Hump	R1	V3
	AG24.00x22.5	15°	6	15	Hump	R1	V3
	AG24.00x22.5UHL	15°	6	12	Knurling	R1	V3
	AG24.00x22.5UHL	15°	6	15	Knurling	R1	V3

Max Speed 65 Km/h na = not available

	SIZE	BEAD ANGLE	RIM THICK.	DISC THICK.	HUMP/ KNUR	REINF	VALVE GUARD
24.5"							
	AG20.00x24.5	15°	6	12	Hump(TH2B)	R1, R2, R3	V3
	AG24.00x24.5	15°	6	12	Hump(TH2B)	R1, R2, R3	V3
26"							
	DW20Ax26	5°	7	12	Knurling	R1	V3
	DW20Ax26	5°	7	15	Knurling	R1	V3
26.5"							
	AG13.00x26.5	15°	6	12	Hump	R1, R2	V3
	AG13.00x26.5	15°	6	15	Hump	R1	V3
	AG16.00x26.5	15°	6	12	Hump	R1, R2	V3
	AG16.00x26.5	15°	6	15	Hump	R1, R2	V3
	AG20.00x26.5	15°	6	12	Hump(TH2B)Knurling	R1, R2, R3	V3
	AG20.00x26.5	15°	6	15	Hump(TH2B)Knurling	R1, R2, R3	V3
	AG20.00x26.5	15°	6	12	Hump(TH2B)	R1, R2, R3	V3
	AG20.00x26.5	15°	6	15	Hump(TH2B)	R1, R2, R3	V3
	AG24.00x26.5	15°	6	12	Hump(TH2B)	R1, R2, R3	V3
	AG24.00x26.5	15°	6	15	Hump(TH2B)	R1, R2, R3	V3
	AG24.00x26.5	15°	6	12	Hump(TH2B)Knurling	R1, R2, R3	V3
	AG24.00x26.5	15°	6	15	Hump(TH2B)Knurling	R1, R2, R3	V3
	AG26.00x26.5	15°	6	12	Hump	R1, R2	V3
	AG26.00x26.5	15°	6	15	Hump	R1, R2	V3
	AG28.00x26.5	15°	6	12	Hump(TH2B)	R1, R2	V3
	AG28.00x26.5	15°	6	15	Hump(TH2B)	R1, R2	V3
30.5"							
	AG20.00x30.5	15°	6	13	Hump(TH2B)	R1, R2, R3	V3
	AG20.00x30.5	15°	6	15	Hump(TH2B)	R1, R2, R3	V3
	AG24.00x30.5	15°	6	13	Hump(TH2B)	R1, R2, R3	V3
	AG24.00x30.5	15°	6	15	Hump(TH2B)	R1, R2, R3	V3
34"							
	DW20Ax34	5°	6	15	Knurling	R1, R2, R3	V3
	DW24Ax34	5°	6	15	Knurling	R1, R2, R3	V3
	DW16Lx34	5°	6	15	Knurling	R1, R2	V3

Wheels for excavator tires

	SIZE	BEAD ANGLE	RIM THICK.	DISC THICK.	HUMP/ KNUR	REINF	VALVE GUARD
22.5"							
	AG20.00x22.5	15°	7	12	Hump	R1	V1, V3
	AG20.00x22.5	15°	7	15	Hump	R1	V1, V3
	AG24.00x22.5	15°	7	12	Hump	R1	V1, V3
	AG24.00x22.5	15°	7	15	Hump	R1	V1, V3

Glossary and information

AG8.00x15.5	**=**	Rim 8” wide and 15.5” in diameter
W12x24	**=**	Rim without drop centre
DW20Bx34	**=**	Rim with drop centre and a high rim flange (B). The disc is welded into the drop centre.
DW18Lx38	**=**	Rim with drop centre and a low rim flange (L). The disc is welded into the drop centre.

Valve protection

Valve guard is used when there is a risk that the valve will be damaged.

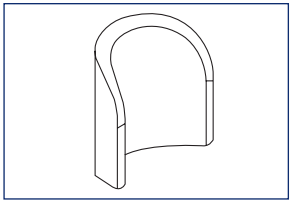

Valve guard, type **V1.** Normal area of application is on wheels intended for use in agriculture. V1 valve guard fits rims up to 26.5”.

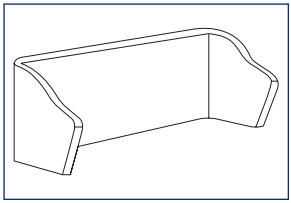

Valve guard, type **V2.** Fits wheels of 30” in diameter and upwards. Its normal area of application is on rims inteded for use in agriculture. This type of valve guard is necessary if a Sävsjö dual-mounting is being used.

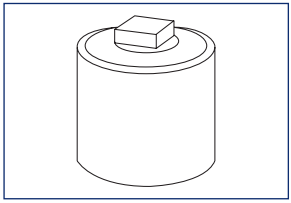

Valve guard, type **V3.** To be used when there is a greater possibility of impact. This style of valveguard fits all forestry and agricultural wheels. Its normal area of application is on forestry and construction equipment.

Reinforcement

Big machines in heavy duty applications frequently face great stress. To handle this you reinforce the flange.
The reinforcements also protect against direct impacts on the edge of the wheel.

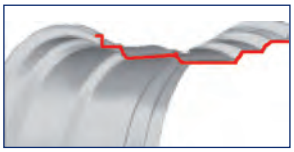

Rim (R0)
R0 means that this rim has no reinforcement.

19 mm reinforcement (R1)
This protects the rim edge against impact and damage, and makes it possible for the rim to carry a larger load.

Box reinforcement (R2)
Protects against impact. In addition, the inside of the rim has a design that prevents dirt and mud from collecting and sticking. This reinforcement produces an extremely strong rim - suitable for the toughest jobs.

Flat bar reinforcement (R3)
Protects the edge from impact and damage, this reinforcement can be used in several tough conditions.

Knurling

The grooved section of the rim where the tire bead rests on a 5° and 15° rim. The purpose of knurling is to counteract the tendency for the tire to slip on the rim.

Hump

An extra bend just inside the bead seat. The hump facilitates driving at low air pressure, holding the tire in place.

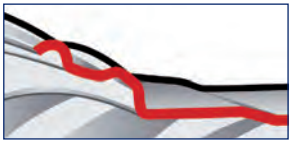

Twinning

Dual mounting system.

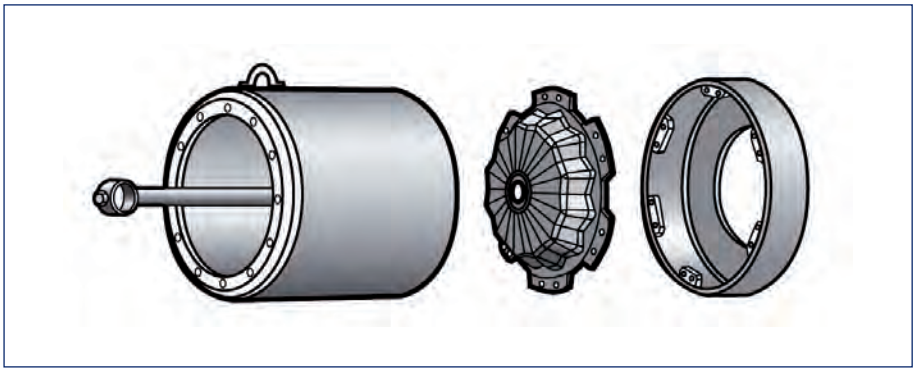

Advantages

- One supplier for the complete package: tire - wheel - dual
- The twinning is an estension of the axle
- Easy maintenance, easy service
- Self-cleaning system
- No modifications needed to the tractor
- Tension and stress will not increase on the original wheel
- New innovative solutions to give easy mounting
- All wheels used are complete with disc

Colours

The rims are powder coated own facility and are available in different colours. Rims can also be supplied without powder-coated. If you have any question please contact the Trelleborg expert in your area.

DUO500

Dual mounting system.

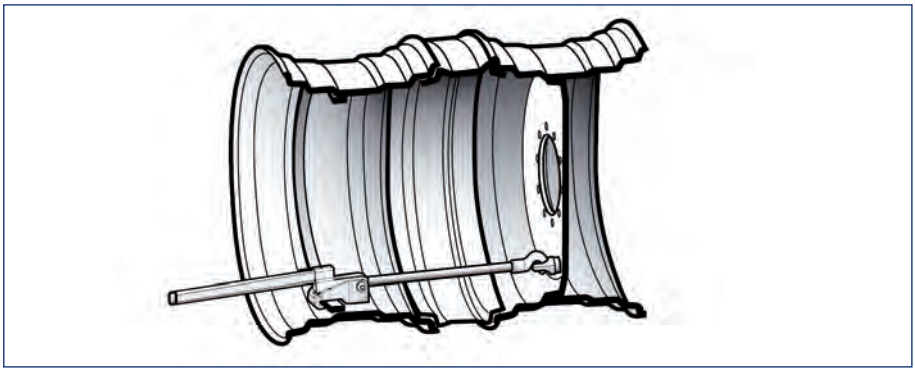

Advantages

- One supplier for the complete package: tire - wheel - dual
- Easy maintenance, easy service
- No modifications needed for the tractor
- Easy to mount and demount
- Attached rim and drum for easy handling
- Customized distance between wheels

THK

Trelleborg High Knurling - THK handles high stress and extreme torque, enabling tractors to work at maximum efficiency and productivity. Together with Trelleborg Extra Large tires, THK represents a system that meets all requirements.

New technology has delivered an advanced knurling design where the height of the profile has almost doubled, providing maximum performance at high speed and torque. In addition, by coating the bead seat of the rim with friction paint, the grip is significantly improved so that tire slippage at extreme torque is prevented.

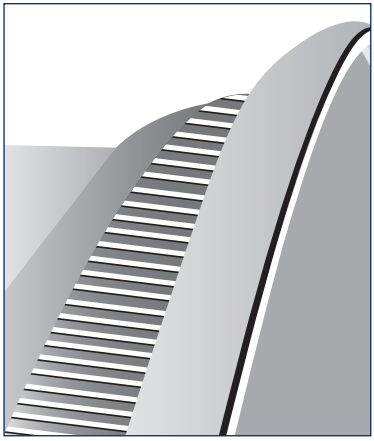

Trelleborg Wheel Systems reserves the right to modify the data contained in this issue without notice.

For the disposal of tires out of service, Trelleborg Wheel Systems recommends adherence to specific country laws.

EDITION 2019

TRELLEBORG

Trelleborg is a world leader in engineered polymer solutions that seal, damp and protect critical applications in demanding environments. Our innovative engineered solutions accelerate performance for customers in a sustainable way. The Trelleborg Group has local presence in over 50 countries around the world.

WWW.TRELLEBORG.COM/WHEELS

facebook.com/TrelleborgAgri
twitter.com/TrelleborgWheel
youtube.com/TrelleborgAgri
flickr.com/TrelleborgAgri
linkedin.com/company/trelleborgwheelsystems
instagram.com/TrelleborgAgri

Trelleborg Wheel Systems Italia S.p.A.
Via Nazionale Tiburtina, 143 - 00010 Villa Adriana (RM) Italy
Phone: +39 0774 384701 - Fax: +39 0774 384702
www.trelleborg.com/wheels