letter size | 100% scale print

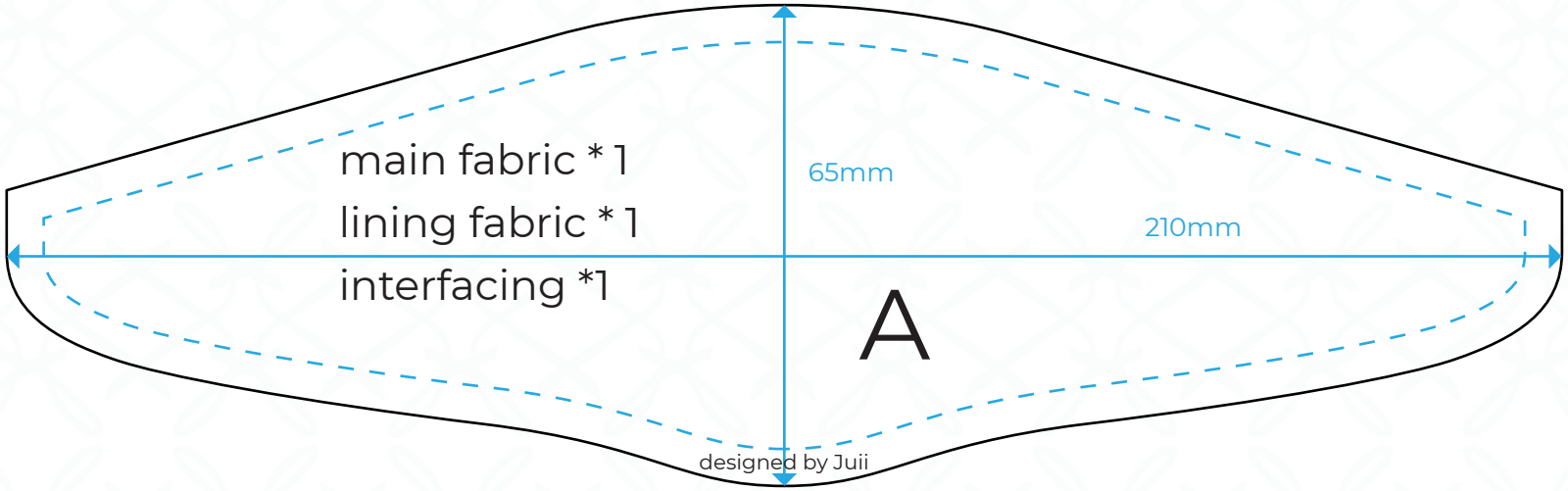

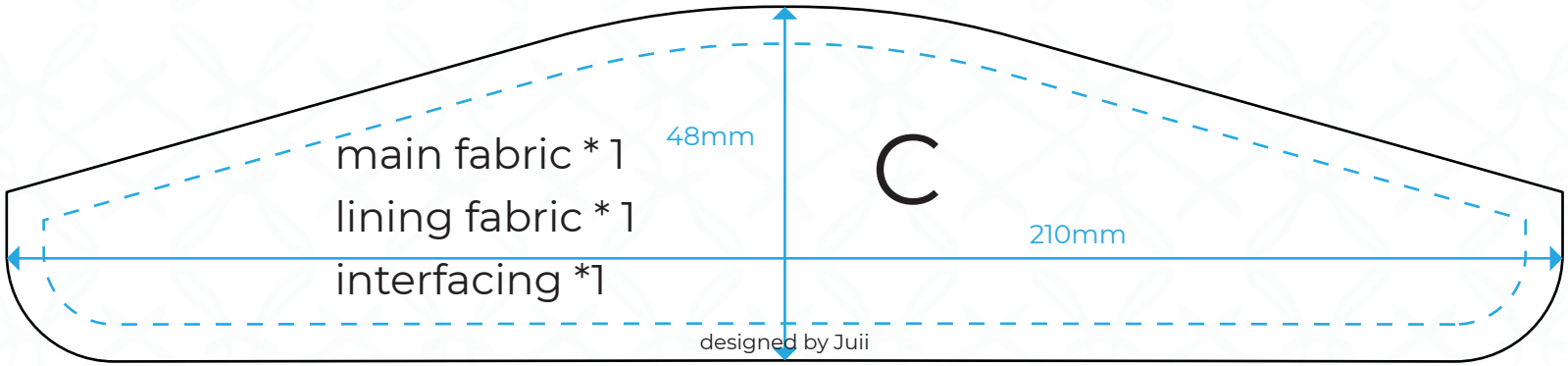

jjuiiujj jjuiiujj
C. Not for commercial use.

letter size | 100% scale print

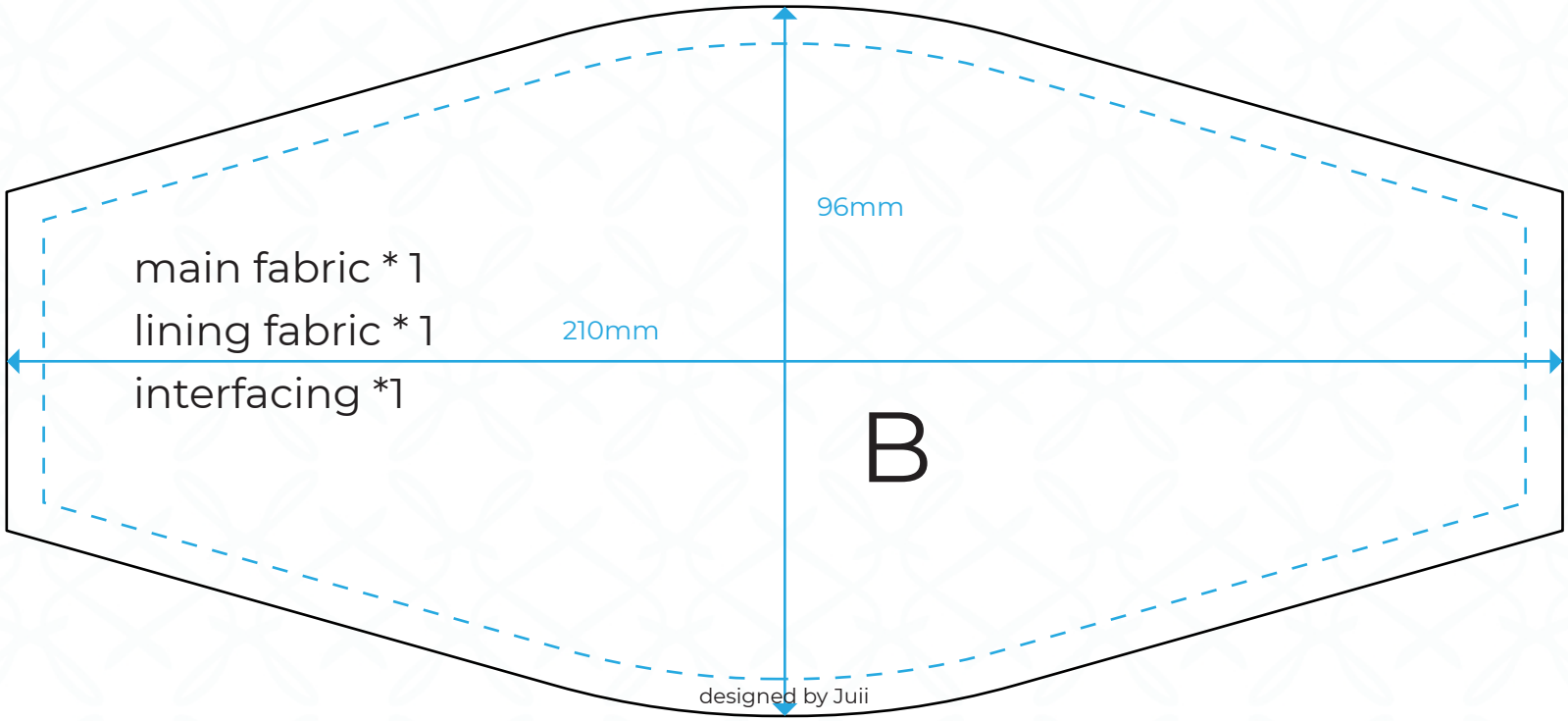

jjuiiujj jjuiiujj
C. Not for commercial use.