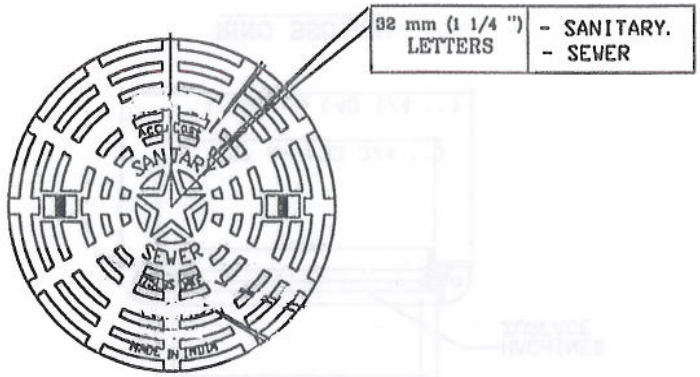

LID PLAN VIEW

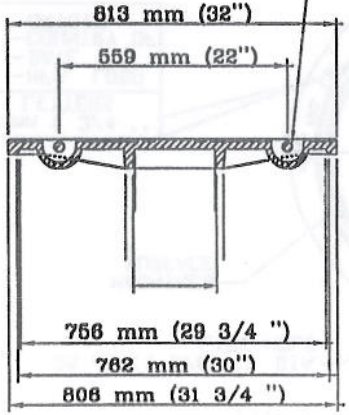

LID SECTION VIEW

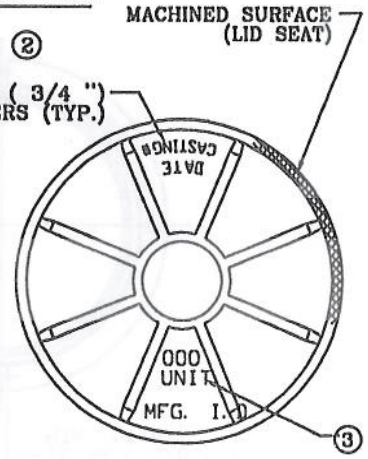

LID SECTION VIEW

AccuCast

415 S. 21st. STREET
WACO, TX 76706

Phone 1-254-756-3200
Fax 1-254-756-0200
Watts 1-800-433-6885

DRAWN BY: RLS

DATE: 30 JUN 01

APPROVED: KD

REVISION: N/C

SCALE: NOT TO SCALE

LOAD RATING
H20

MATERIAL SPECIFICATION
ASTM A 48 CLASS 30

COATING
NONE

ESTIMATED WEIGHT - LBS.
380

PART / DWG NUMBER
503s-4w_1

CATALOG NUMBER
260751

SANITARY SEWER MHFC -

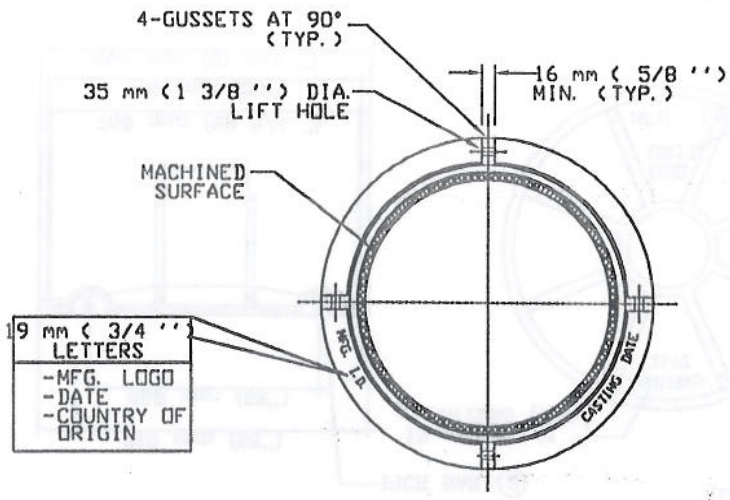

MANHOLE RING

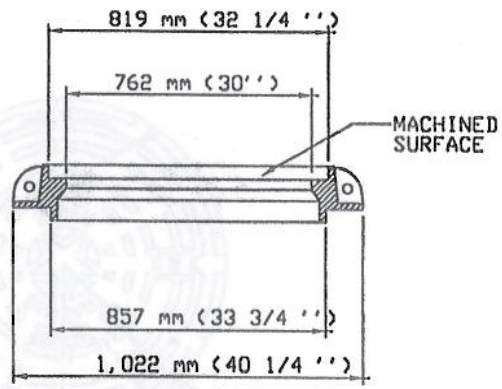

RING SECTION

AccuCast
415 S. 21st. STREET
WACO, TX 76706
Phone 1-254-756-3200
Fax 1-254-756-0200
Watts 1-800-433-6885

DRAWN BY: RLS

DATE: 30 JUN 01

APPROVED: KD

REVISION: N/C

SCALE: NOT TO SCALE

LOAD RATING
H20

MATERIAL SPECIFICATION
ASTM A 48 CLASS 30

COATING
NONE

ESTIMATED WEIGHT - LBS.

PART / DWG NUMBER
503s-4w_2

CATALOG NUMBER

MANHOLE RING AND COVER