micropsi industries

MIRAI

Hand-Eye Coordination for Industrial Robots

MIRAI is a robot control system that enables industrial robots to handle variance in shape, position, color, and light conditions. Using AI, MIRAI generates robot movements in real time and can respond to movements of the object itself. MIRAI takes control of the first and last centimeters of the robot's path, where a fixture would otherwise be necessary. In addition, the system can be retrained for new tasks at any time.

BENEFITS

Variance Handling
Industrial robots augmented by the MIRAI robot control system are able to deal with variance in shape, position, color, and light conditions in the workspace.

Application Flexibility
Because robots equipped with the MIRAI robot control system are able to learn many tasks, they can be trained — and retrained — for various process steps.

Cost Effectiveness
The MIRAI robot control system is a cost-effective solution for highly complex tasks. Expensive, special-purpose systems are not necessary anymore.

Easy Deployment
Customers can quickly and easily train or retrain robot movements by themselves in as little as a few hours. No knowledge of programming or AI is required.

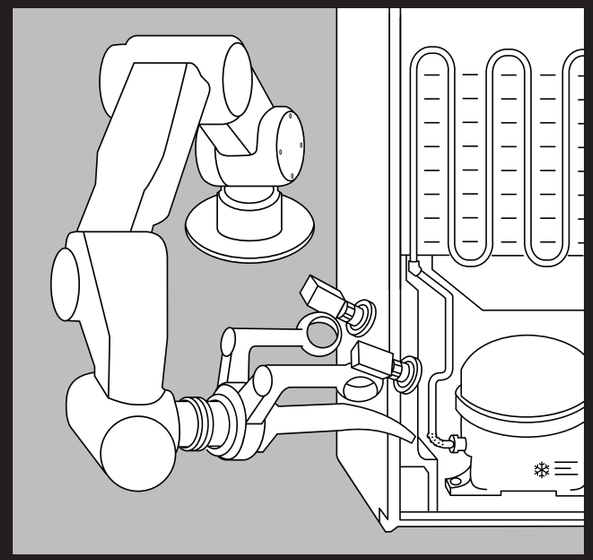

Leak Detection

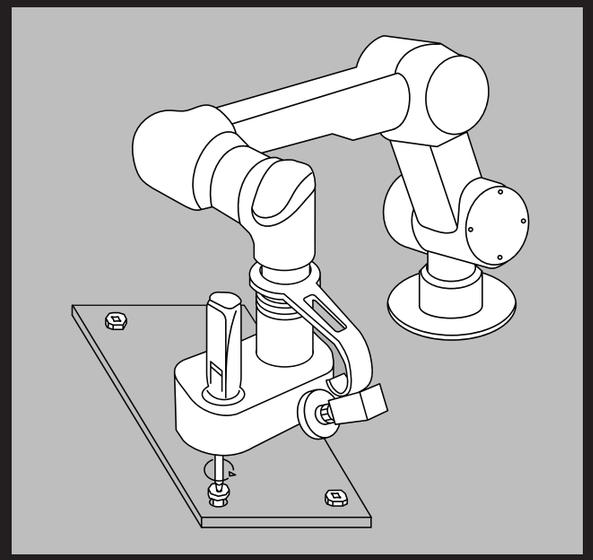

Screwing

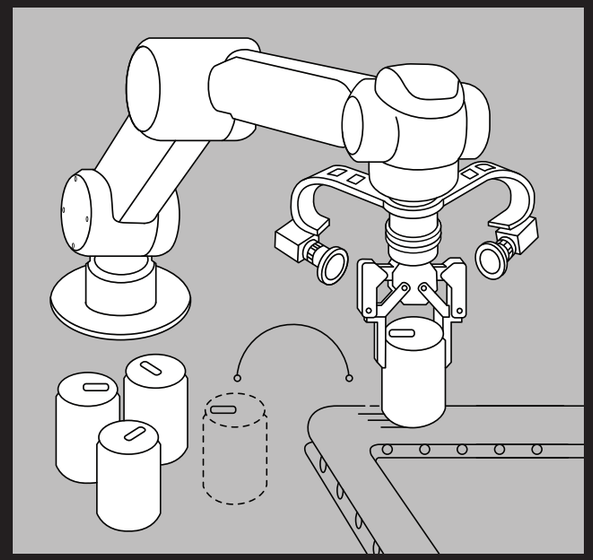

Semi-Sorted Picking

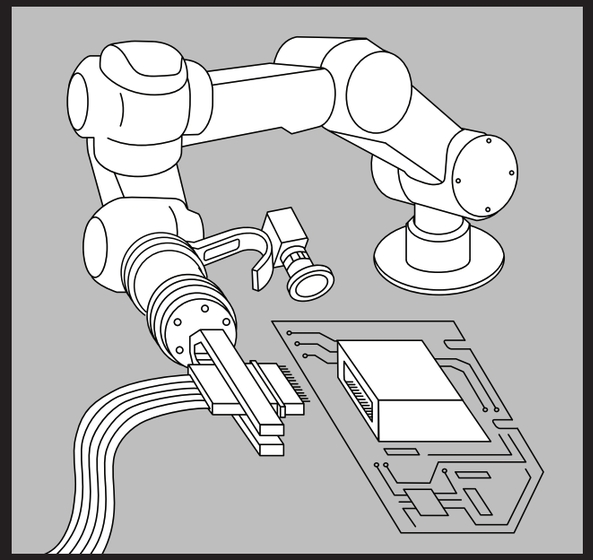

Cable Insertion

FANUC Compatible

UNIVERSAL ROBOTS+ Certified

How Does MIRAI Work?

MIRAI augments the robot's native controller, enabling machines to perceive their work environment. Through AI, MIRAI-enabled robots observe actions performed by a human operator and then imitate those actions. Observations are recorded by a camera attached to the robot's wrist and/or situated at a fixed position proximate to the workspace. To train the robot, a human user performs and records repeated demonstrations of a task by manually guiding the robot by the robot's wrist. The recordings are then transformed into a vision-based, real-time robot control schema.

General MIRAI Setup

A MIRAI controller (supplied by Micropsi Industries)
B Robot (FANUC, Universal Robots)
C Force-torque sensor
D End effector
E Camera (supplied by Micropsi Industries)
F Ring-light

SIEMENS energy

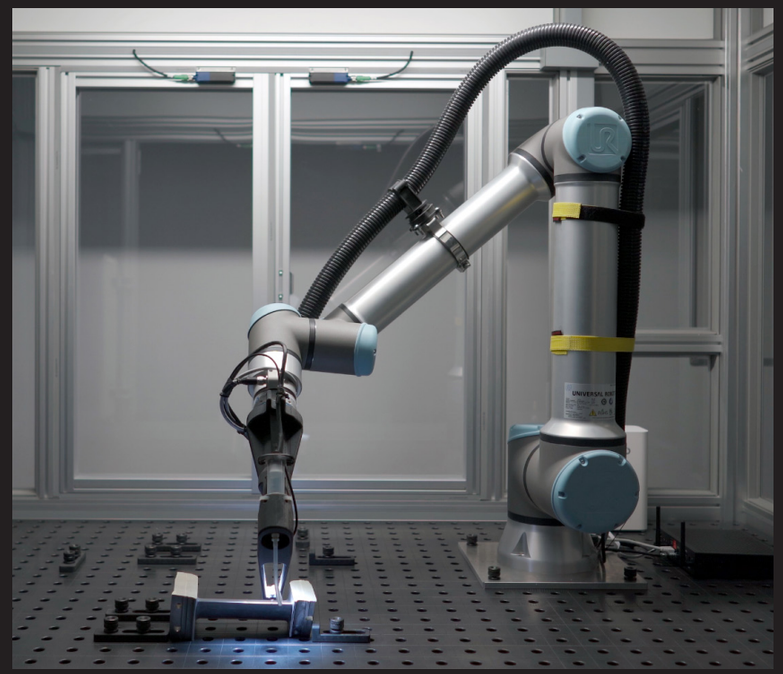

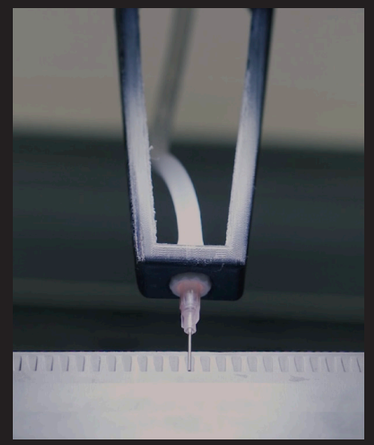

Siemens Energy, a leading energy technology company, brought in MIRAI to automate a process step in the refurbishment of a gas turbine vane. After four years of use, the vanes are reshaped and surface treated. Along the surface of the vanes are hundreds of tiny drillings, each roughly two millimeters wide. In the refurbishment process, the drillings must be filled in before surface treatment. This involves inserting a thin needle into every individual drilling and dispensing soldering paste. The automation solution, thanks to MIRAI, handles several challenges:

- The drilling positions on the vane deviate due to temperature deformation of the vane during prior use.
- The soldering-paste dispensation is cumbersome, with hundreds of drillings to be filled. It takes hours for a human to fill them all.
- The vanes themselves come in different versions and different states of wear.

ZF

ZF, a global technology company headquartered in Friedrichshafen, Germany, uses MIRAI to automate machine tending in a high-volume milling station where gears are manufactured. Metal rings are picked from a crate and placed onto a conveyor belt. Because of MIRAI, the automated solution can deal with numerous challenges:

- The rings in the crate shift during transportation, making their positions unpredictable.
- The position of the crate, once delivered and facing the robot, can vary 20–30 mm in all directions.
- The form of the crate can vary. Sometimes its sides are not straight. They can be pressed inward, with a deviation of 20–30 mm.
- In the spring and autumn, the workspace gets direct sunlight.
- Bubble foil on the inside of the crate covers some parts of the rings.
- The surface of the rings can have oil and rust. This creates variance in their visual representation from the robot's perspective.

Get in Touch
Want to try the MIRAI system in your factory? Want to discuss your automation tasks with an expert?

Schedule a Call
+1 718 440 7353

Email Us
contact@micropsi-industries.com

Follow Us @ Micropsi Industries
YouTube, Facebook, LinkedIn, Twitter

Main Europe Office
micropsi industries GmbH
Möckernstr. 120
10963 Berlin, Germany
+49 30 549 05 701

Main US Office
micropsi industries USA, Inc
149 New Montgomery St., 4th floor
San Francisco 94105, USA
+1 718 440 7353

micropsi-industries.com