Genesis WM

wall hung condensing system boiler

MODELS

45

60

OUTPUT (kW)

41 - 63

modutherm

Genesis WM System Boilers

The Genesis WM System is available in two models, 45 & 60, and is suitable for large domestic and light commercial projects. The boilers have a stainless steel heat exchanger which offers increased durability and high resistance to corrosion. The boilers are lightweight with compact dimensions, supplied with an external modulating pump.

5yr Heat Exchanger Warranty

Nat Gas LPG

Modulation **9:1** Turndown

NOx Class **6**

Energy Efficiency Class **A**

key features

- **ErP A rated**
- **Supplied with an external modulating pump**
- **Lightweight with compact dimensions**
- **Comprehensive range of flues so the Genesis WM can be fitted almost anywhere**
- **Modulation of the gas valve is 9:1 and automatically adjusts the heat to match the heating and hot water demands**
- **Suitable for natural gas and can also be converted to LPG when mains gas is not available**
- **Fully modulating low NOx burner**

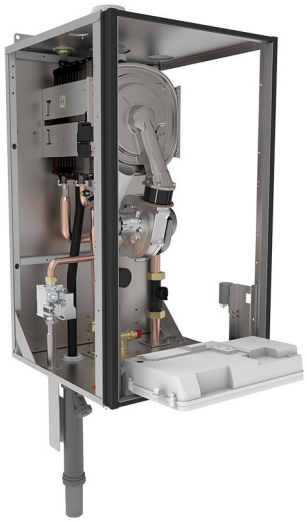

MODEL

45

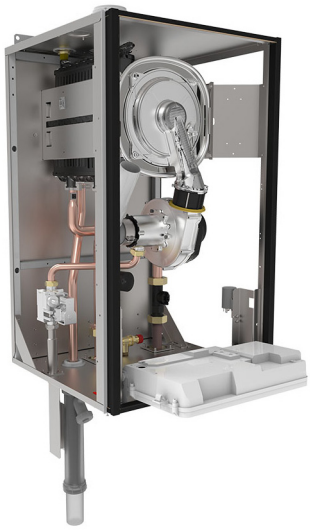

MODEL

60

warranty

- 5 year warranty* on heat exchanger
- 2 year warranty* on parts

*subject to Terms & Conditions

DIMENSIONS & TECHNICAL DATA

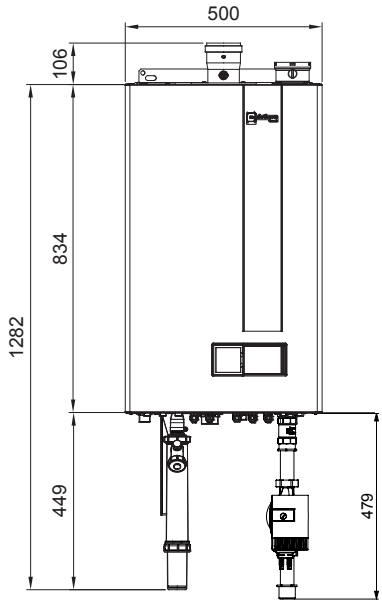

FRONT VIEW

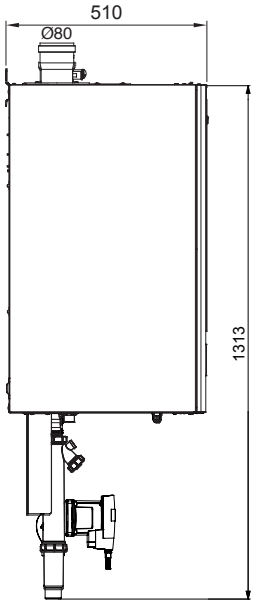

SIDE VIEW

UNDERSIDE VIEW

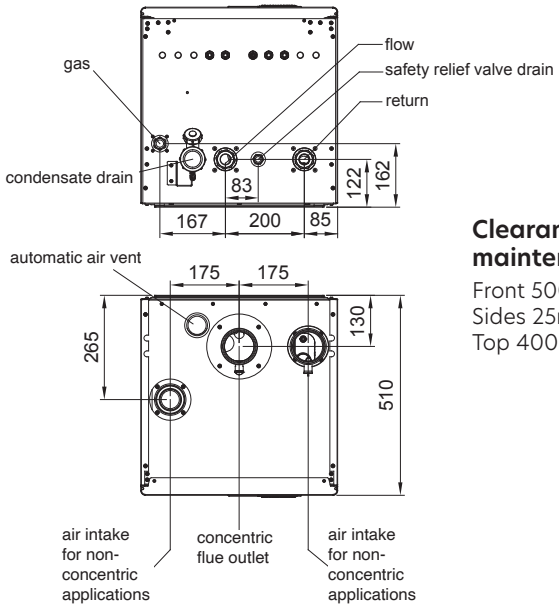

PLAN VIEW

Clearances for maintenance

Front 500mm
Sides 25mm
Top 400mm

			MODEL 45	MODEL 60
power	ErP efficiency rating		A	A
	Maximum boiler output (80-60°C) - NG & LPG	kW	38.5	58.3
	Maximum boiler output (50-30°C) - NG & LPG	kW	41.5	62.8
	Minimum boiler output (80-60°C) - NG & LPG	kW	3.8	5.8
	Minimum boiler output (50-30°C) - NG & LPG	kW	4.3	6.5
	Maximum boiler input (gross) - NG & LPG	kW	40	60
	Heat efficiency (50-30°C) - maximum output	%	105.3	104.6
	Modulation		1:9	1:9
	Building regulations Part L seasonal efficiency	% gross	95.6	95.9
	SAP 2009 Annual efficiency - NG	%	88.9	89.0
hydraulic	Water content	litres	2.2	3.3
	System design flow rate (20°C ΔT rise)	l/hr	1800	2700
	Minimum water pressure	bar	0.8	0.8
	Maximum water pressure	bar	3.0	3.5
	Maximum flow temperature setting	°C	80	80
	Approximate condensate volume at 50/30°C	l/hr	6.5	9.2
gas	Maximum gas inlet pressure - NG	mbar	25	25
	Nominal gas inlet pressure - NG	mbar	20	20
	Minimum gas inlet pressure - NG	mbar	17	17
	Nominal gas inlet pressure - LPG	mbar	37	37
flue	Maximum flue gas temperature (80-60°C) - NG (Inlet Air at 20°C)	°C	77.0	77.0
	Maximum flue gas temperature (80-60°C) - LPG (Inlet Air at 20°C)	°C	77.0	77.0
	Dry NOx emmision (0% excess oxygen, mg/kWh dry air free)	mg/kWh	23	39
electric	Electrical supply		230-50V	
	Start current (per module)	Amp	4.0	4.0
	Run current (per module)	Amp	4.0	4.0
	Dry weight	Kg	45.5	50
	Noise level indoors	dB(A)	54	59

wall terminal

The balance flue wall terminal is Ø80/125. It is designed to terminate **horizontally** through an external wall, bringing in the combustion air from outside and exhausting the flue gases.

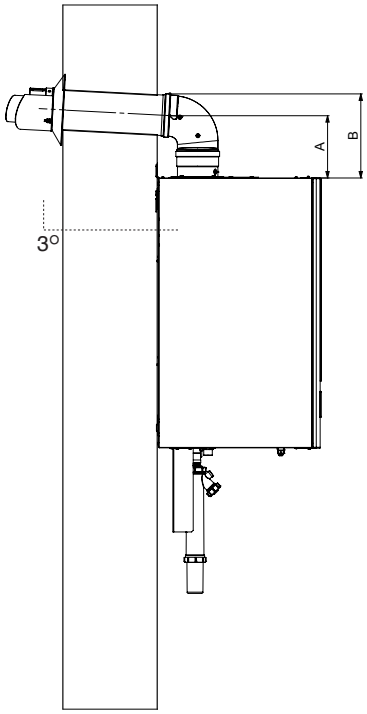

	80/125
A	195
B	260

roof terminal

The balance flue roof terminal is Ø80/125. It is designed to terminate **vertically** through the roof, bringing in the combustion air from outside and exhausting the flue gases.

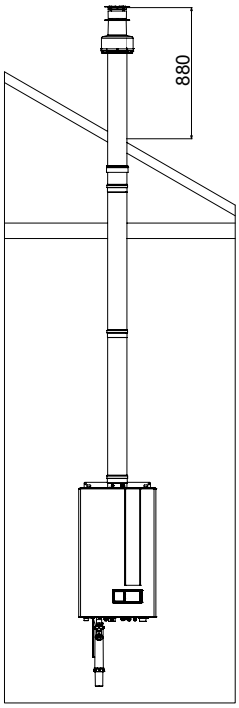

The figures in the table are measured in metres and should be deducted from the maximum flue length, not to exceed the length.

MAX FLUE LENGTH (m)		SIZE 80/125	
		16	14
		MODEL	
	CODE	45	60
Ø80/125 concentric adaptor	CF-80/125CA	0.5	0.5
Ø80/125 wall terminal	CF-80/125WT	6	6.5
Ø80/125 roof terminal	CF-80/125RT	6.5	7
Ø80/125 45° elbow	CF-80/125-45B	1	1
Ø80/125 90° elbow	CF-80/125-90B	1	1
Ø80/125 0.5m length	CF-80/125-05ML	0.5	0.5
Ø80/125 1m length	CF-80/125-1ML	1	1

modutherm

Modutherm Limited
Unit 4 Genesis
Endeavour Drive
Basildon, SS14 3WF

modutherm.co.uk
Tel: 0345 521 5666
enquiries@modutherm.co.uk

*A member of the **Modular Heating Group.***