Genesis FS

floor standing condensing boiler

MODELS

120

160

200

250

OUTPUT (kW)

124 - 250

modutherm

Genesis FS

The Genesis floor standing boiler is available in a range of 4 models from 124 - 250kW, with a highly durable stainless steel heat exchanger offering thermal efficiency up to 108% net. The Genesis FS boiler has a modulation range up to 13:1, with a small footprint which makes it suitable for installation in areas with space constraints. The boiler has an intelligent control system which can cascade up to 16 boilers in a modular configuration.

10yr Heat Exchanger Warranty

Nat Gas & LPG

Modulation **13:1** Turndown

NOx Class **6**

Stainless Steel

BIM Drawings

key features

- **Stainless steel heat exchanger**
- **Cascade installations up to 16 boilers**
- **Class 6 NOx emissions**
- **High modulation ratio up to 13:1**
- **0-10V control**
- **Compact dimensions**
- **Stainless steel internal pipework**
- **Efficiency of up to 108% net**

warranty

- 10 year warranty* on heat exchanger
- 2 year warranty* on parts

MODELS

- 120
- 160
- 200
- 250

*subject to Terms & Conditions

SINGLE BOILER DIMENSIONS

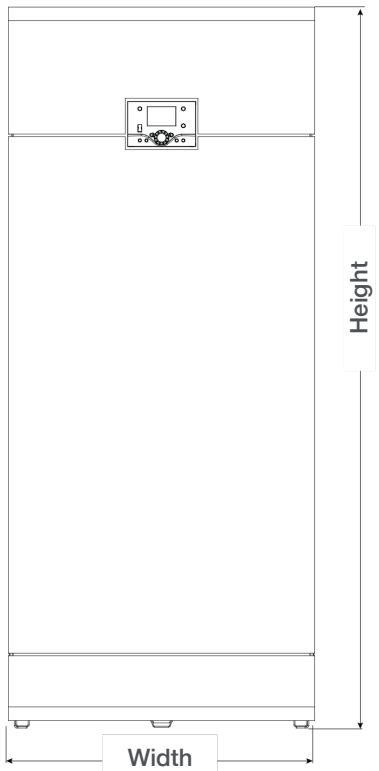

FRONT VIEW

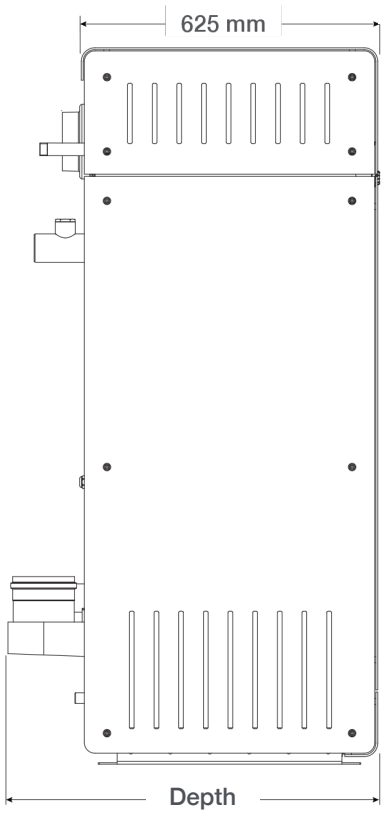

SIDE VIEW

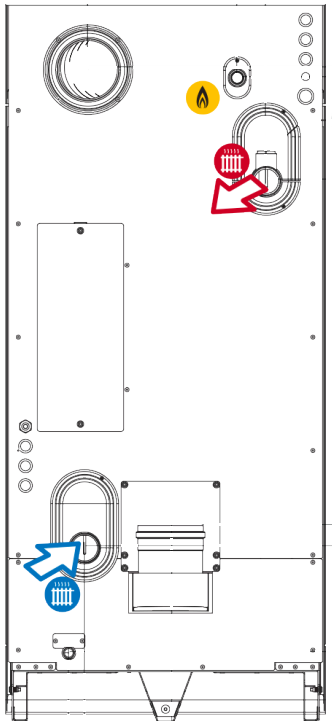
REAR VIEW

Gas Return Flow

		120	160	200	250
Height	mm	1524	1524	1524	1524
Width	mm	648	648	648	648
Depth	mm	787	787	860	860
Air inlet	mm	125	125	125	125
Chimney connection	mm	130	130	180	180
Heating return connection	inches	2	2	2½	2½
Heating flow connection	inches	2	2	2½	2½
Gas connection	inches	¾	¾	1	1
Condensate drain	mm	25	25	25	25

internal structure

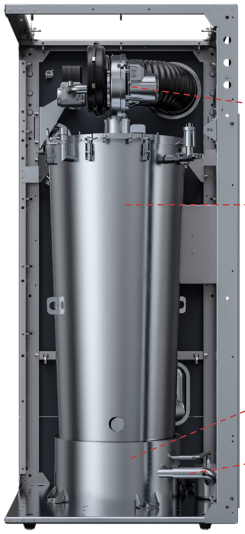

TECHNICAL DATA

			MODEL			
			120	160	200	250
power	Maximum boiler output (80-60°C) - NG (G20)	kW	112.8	148.0	185.6	226.7
	Maximum boiler output (50-30°C) - NG (G20)	kW	124.0	162.7	204.2	249.7
	Maximum boiler output (80-60°C) - LPG (G31)	kW	112.8	148.0	185.6	226.7
	Maximum boiler output (50-30°C) - LPG (G31)	kW	122.0	159.9	204.2	244.5
	Minimum boiler output (80-60°C) - NG (G20)	kW	10.8	18.3	24.2	24.6
	Minimum boiler output (50-30°C) - NG (G20)	kW	12.0	20.4	26.8	27.4
	Minimum boiler output (80-60°C) - LPG (G31)	kW	27.9	36.6	46.0	56.2
	Minimum boiler output (50-30°C) - LPG (G31)	kW	30.5	40.0	50.0	61.4
	Maximum boiler input	kW	115.5	151.4	190.0	232.0
	Heat efficiency (50-30°C) - maximum output	%	107.5	107.5	107.5	107.7
	Standby losses	kW	0.215	0.225	0.248	0.260
	Modulation	ratio	10.3:1	7.9:1	7.6:1	13.6:1
	Building regulations Part L seasonal efficiency (Non Domestic Building) - NG	% gross	96.1	95.8	95.5	95.5
	Building regulations Part L seasonal efficiency (Non Domestic Building) - LPG	% gross	98.2	97.9	97.7	97.7
hydraulic	Water content	litres	51	47	66	62
	System design flow rate (20°C ΔT rise) single boiler	l/s	5.5	7.2	9.0	11.1
	Water side pressure loss (20°C ΔT rise) single boiler	kPa	8.0	8.8	10.1	10.9
	Minimum water pressure	bar	0.8	0.8	0.8	0.8
	Maximum water pressure	bar	6.0	6.0	6.0	6.0
	Maximum flow temperature setting	°C	90	90	90	90
gas	Gas flow rate, NG (G20) - maximum	m³/hr	10.7	14.3	18.2	21.9
	Gas flow rate, LPG (G31-37 mbar) - maximum*	m³/hr	4.5	5.9	7.4	9.0
	Maximum gas inlet pressure - NG (G20)	mbar	25	25	25	25
	Maximum gas inlet pressure - LPG (G31-37 mbar)	mbar	45	45	45	45
	Nominal gas inlet pressure - NG (G20)	mbar	20	20	20	20
	Nominal gas inlet pressure - LPG (G31-37 mbar)	mbar	37	37	37	37
	Minimum gas inlet pressure - NG (G20)	mbar	17	17	17	17
	Minimum gas inlet pressure - LPG (G31-37 mbar)	mbar	25	25	25	25
flue	Flue gas temperature at 80/60°C	°C	60	61	62	61
	Flue gas temperature at 50/30°C	°C	34	34	34	35
	Max. flue gas pressure	Pa	200	200	200	200
	Mass flow rate of flue gasses	g/s	47	64	80	101
	Max. condensate volume	kg/h	14.4	18.6	24.0	30.0
	Dry NOx emission (0% excess O_2)	mg/kWh	36.6	39.4	38.7	36.0
electric	Electrical supply (Fused supply requirement of 3 Amps)		230/1/50	230/1/50	230/1/50	230/1/50
	Power consumption - maximum	kW	0.178	0.197	0.208	0.275
	Power consumption - minimum	kW	0.022	0.030	0.028	0.030
	Run current - maximum	A	0.9	1.0	1.1	1.4
	Dry weight	Kg	185	199	224	236

*Calculated based on GCV for commercial propane - 93.1m³/h

sealed system with plate heat exchanger

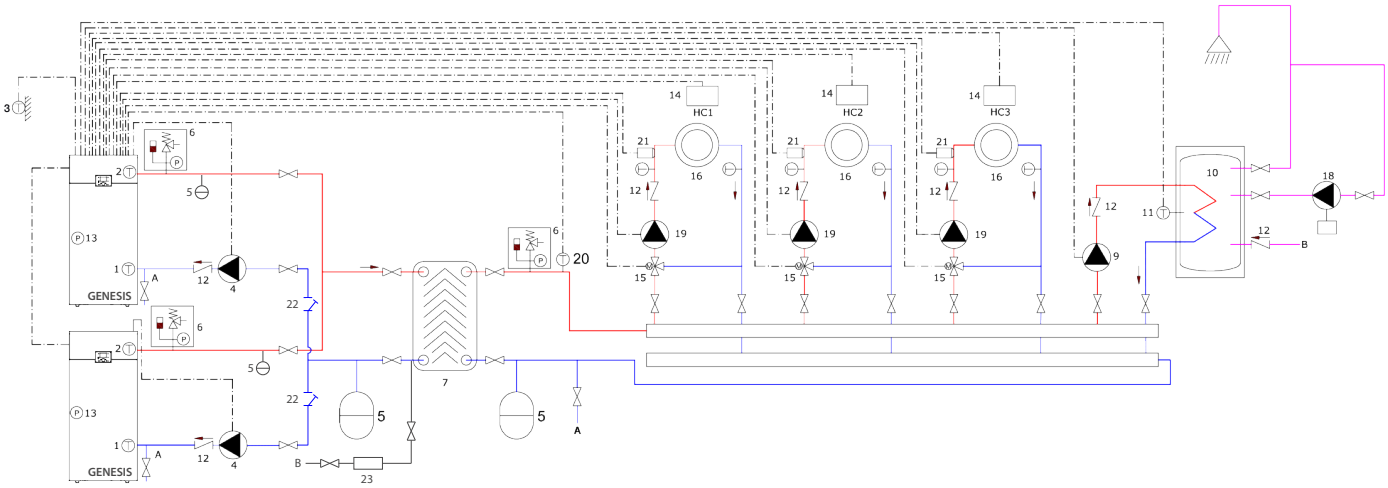

sealed system with low loss header

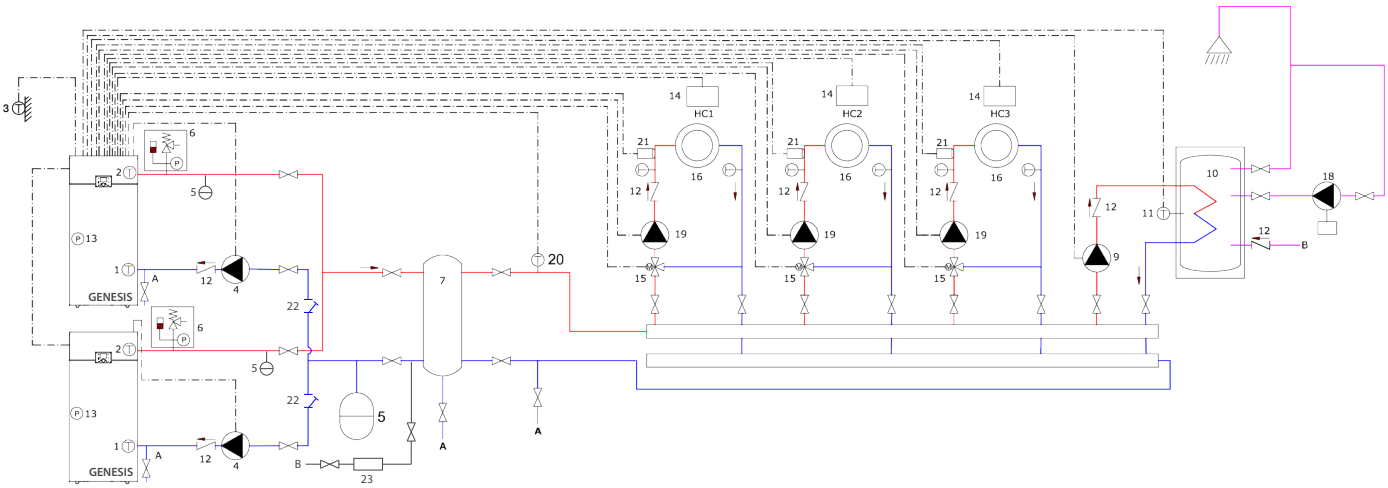

H.C.	Heating circuit
D.H.W.	Domestic hot water
A	Primary return/drain
B	DHW cold water supply
1.	Primary flow
2.	Primary return
3.	Outside temperature sensor
4.	Boiler pump
5.	Expansion vessel
6.	Safety group (safety valve, air vent - air purge, manometer)
7.	Plate heat exchanger/low loss header
8.	Air vent
9.	DHW primary pump
10.	DHW storage tank
11.	DHW storage tank temperature sensor
12.	Check valve
13.	Water pressure sensor
14.	Room unit/room thermostat
15.	Mixing valve
16.	Consumers
17.	Cascade return sensor
18.	DHW circulation pump (with timer)
19.	HC pump
20.	System flow temperature sensor
21.	HC1, HC2, HC3 temperature sensor
22.	Strainer
23.	System pressure manager

Modutherm Limited
Unit 4 Genesis
Endeavour Drive
Basildon, SS14 3WF

modutherm.co.uk
Tel: 0345 521 5666
enquiries@modutherm.co.uk

*A member of the **Modular Heating Group**.*

CB/0420