HEX PLUG

MSA Code: B07

Catalogue: BSP Screwed Fittings, Page 4

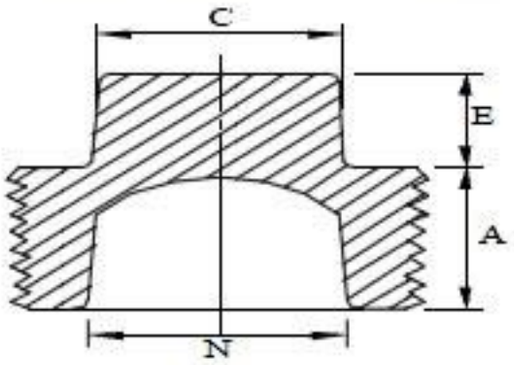

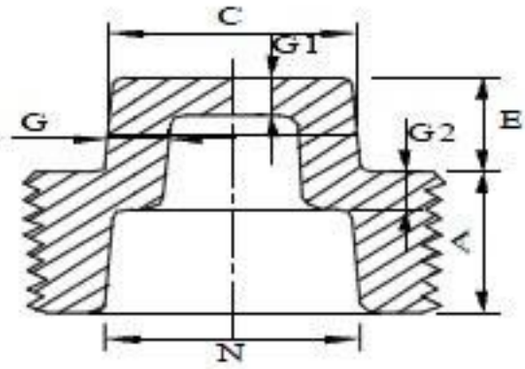

Nominal Size	A Min	C Min	E Min	G1	G2	N MAX
1/8	7	7.1	6.0	-	-	-
1/4	10	9.5	7.0	-	-	-
3/8	10	11.1	8.0	-	-	-
1/2	14	14.3	10.0	2.3	3.0	13
3/4	14	15.8	11.0	2.5	3.3	19
1	18	20.6	13.0	2.8	3.6	24
1-1/4	18	23.8	14.0	3.0	3.8	32
1-1/2	19	28.5	16.0	3.3	4.1	37
2	19	33.3	17.0	3.8	4.3	49
2-1/2	27	38.1	19.0	4.3	4.6	59
3	29	42.8	20.0	4.8	4.8	74
4	31	57.1	23.0	5.6	5.6	97

All dimensions are in (mm)