Datasheet

STERNA

The STERNA: The STERNA is a one of it's kind lighting solution that has been especially designed for cage systems. Thanks to it's coated surfaces, the STERNA is able to realise higher animal comfort. STERNA: a solid long term investment.

Specifications

Operating voltage:	48VDC
Dimmer type:	HATO 48VDC power supply
Dim range:	0 - 100%
Light source:	LED
Power consumption:	9.4W
Light output:	820 lumen
Efficacy:	87.2lm/W
Light colour:	2900K
CRI:	>80
Flicker-free:	yes
Expected average lifetime*:	50,000h
Operating temp.:	-10°C (14°F) < Ta < +40°C (104°F)
Nett weight:	310 gr / 0.7 lbs
Cover:	Impact resistant PMMA
Base:	ABS
Warranty:	3 Years
Application:	H-cage housing

Dimensions

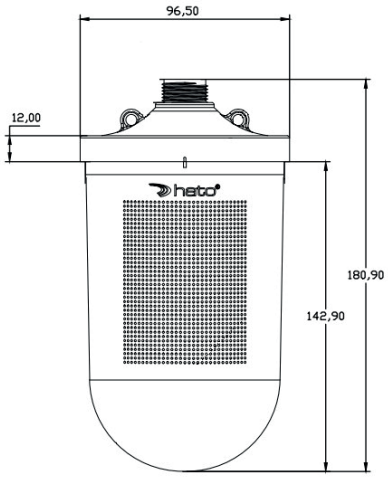

Connection

T-connector
(+ integrated cable)

Dir-Connector

Junction Box

Standard cable length options: 4, 150 or 250 cm's
Other lengths upon request.

CLIMATEC Call: 01531 631 161 Email: climatec@climatec.co.uk Visit: www.climatec.co.uk

Datasheet

STERNA

Light Distributions

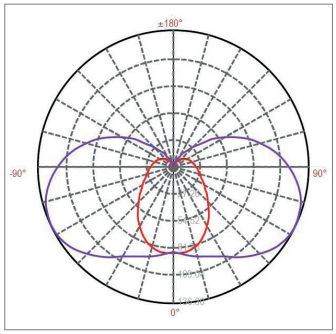

Spectrum

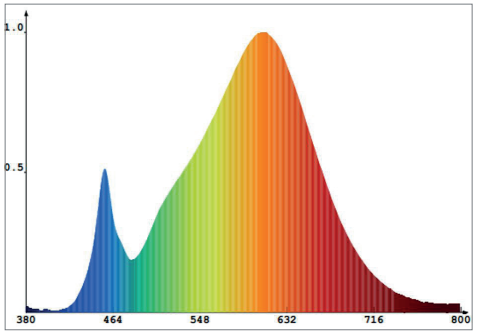

Accesories

LTS-10-01

RCE

RCH

PSH2

PSH small

Installation example

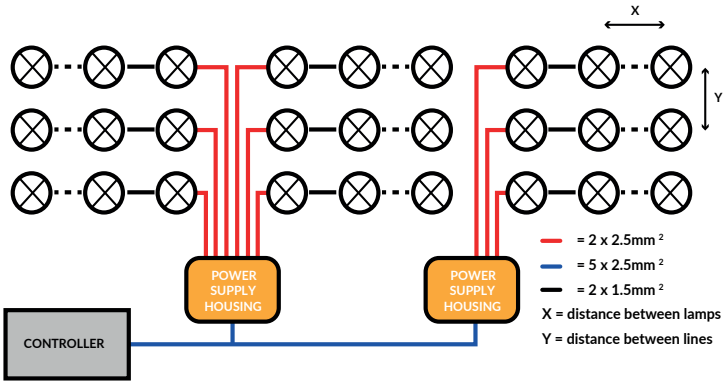

Datasheet

STERNA

Cable Ø	Distance (x) between lights	Lights in a row	4mm2 cable (11 AWG) Max length connection cable	2.5mm2 cable (13 AWG) Max length connection cable
2 x 1.5 mm2	2.4m / 7.8ft	27 (1)	43m / 141ft	26m / 85.3ft
2 x 1.5 mm2	3.6m / 11.8ft	22 (1)	52m / 170.6ft	33m / 108.3ft
2 x 1.5 mm2	4.8m / 15.7ft	20	58m / 190.3ft	36m / 118.1ft
2 x 2.5 mm2	2.4m / 7.8ft	32 (1)	35m / 114.8ft	22m / 72.2ft
2 x 2.5 mm2	3.6m / 11.8ft	28 (1)	41m / 134.5ft	25m / 82ft
2 x 2.5 mm2	4.8m / 15.7ft	25 (1)	46m / 150.9ft	29m / 95.1ft

(1) Warning: check number of STERNA in line to guarantee correct usage of fuses:

» 195 mA per lamp, standard 4A fuse (5x20mm/5x25/5x30mm) » In case of 21 pcs or more per line, 6A fuse 5x20mm/5x25/5x30mm min. 60VDC is needed

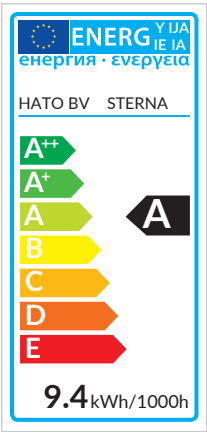

Specifications are subject to change without prior notice

* Lifetime definition & measurement available upon request

Markings

IP67 **

** Protection test against penetration of water IPX7

(protected against the effect of immersion between 15cm and 1m)