REMARK : RoHS REQUIREMENT APPLIED
(符合RoHS)

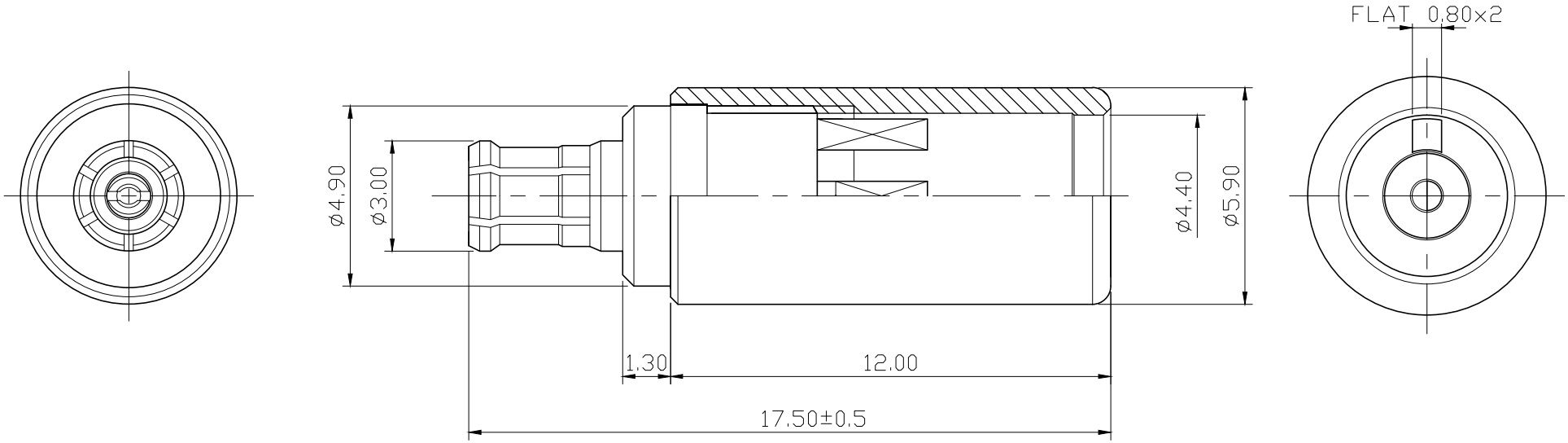

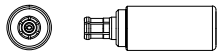

S 1 : 1

NO.	Description	Unit	Materials	Finish	Drawing No.
–					
–					
–					
4	shell	1	aluminum	clear anodic treatment	
3	body	1	beryllium copper	gold	
2	insulator	1	PTFE	white	
1	contact pin	1	beryllium copper	gold	

DIMENSIONS ARE IN MILLIMETERS

UNLESS OTHRWISE PECIFIED TOLERANCES
(一般公差)
0.5~6 = ±0.2
>6~30 = ±0.4
>30~120 = ±0.6
>120~315 = ±1
>315~1000 = ±1.6
ANGLES(角度) = ±5°

SCALE 6 : 1 UNIT MM

CHECKED

DRAWN *Otis*

DATE 2017. 07. 12

雅鈦企業有限公司
Aec Connectors Co., Ltd.

TITLE
IEM PLUG

DRAWING NO.
IP-311ATG-TEF-4.4

FILE NO. DRAWING\AUDIO\IP\IP-311ATG-TEF-4.4