REMARK : RoHS REQUIREMENT APPLIED
(符合RoHS)

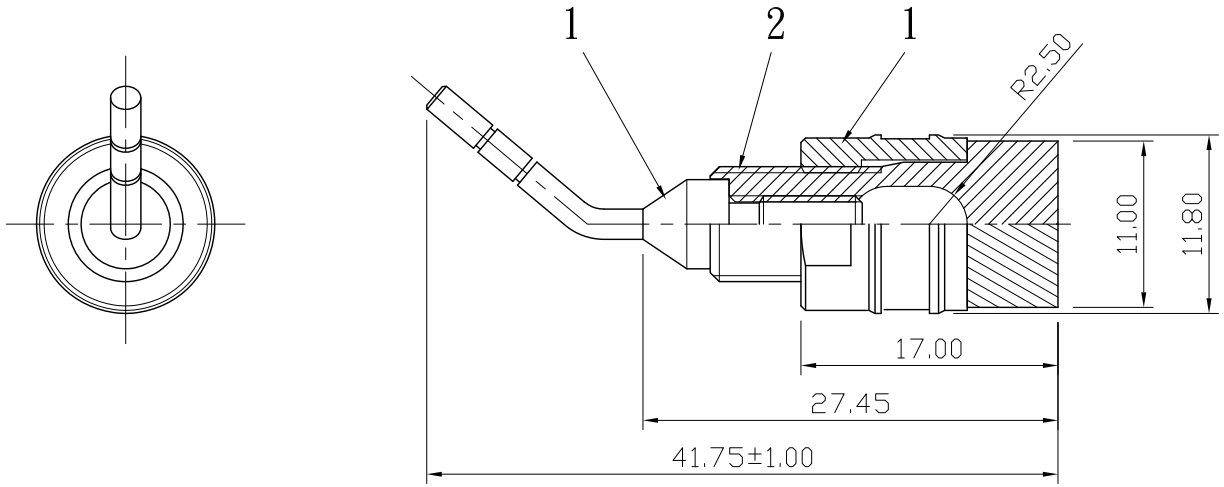

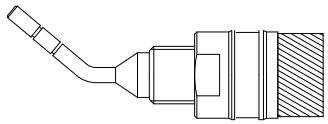

S 1 : 1

NO.	Description	Unit	Materials	Finish	Drawing No.
7					
6					
5					
4					
3	headlock	1	brass	gold	
2	shell	1	brass	gold	
1	body	1	brass	gold	

DIMENSIONS ARE IN MILLIMETERS

UNLESS OTHRWISE PECIFIED TOLERANCES
(一般公差)
0.5~6 = ±0.2
>6~30 = ±0.4
>30~120 = ±0.6
>120~315 = ±1
>315~1000 = ±1.6
ANGLES(角度) = ±5°

SCALE 2 : 1 UNIT MM

CHECKED

DRAWN *Otis*

DATE 2010. 05. 24

雅鈦企業有限公司
Aec Connectors Co., Ltd.

TITLE TIP PLUG

DRAWING NO. TP-112GG

FILE NO. DRAWING\AUDIO\TP\TP-112GG